SUZUKI

PARTS CATALOGUE

DF70A/80A/90A

DF70A
DF70ATH
DF80A
DF90A
DF90ATH

OUTBOARD MOTOR

E01/E40

2014-6

1ST EDITION

PREFACE

When it becomes necessary to replace parts on SUZUKI OUTBOARD MOTORS, always use SUZUKI GENUINE PARTS which have passed a strict inspection which guarantees quality and performance.

This parts catalogue covers the list of all service parts for SUZUKI DF70A/80A/90A production start 2014.

INSTRUCTIONS FOR QUOTING THE CATALOGUE

1. DIMENSIONS

Dimensions of the parts in this catalogue are indicated in unit millimeters.

2. ABBREVIATIONS

Abbreviations used in this catalogue are as follows:

AR	: As required	NT	: Number of teeth
ASSY	: Assembly	OPT	: Optional
E.NO.	: Engine number	OS	: Over size
F.NO.	: Frame number	STD	: Standard
D	: Diameter of material	T	: Thickness
ID	: Inside diameter	US	: Under size
OD	: Outside diameter	W	: Width
L	: Length	W/	: With
LH(PORT)	: Left hand side	L,X	: Transom type
RH(STBD)	: Right hand side	SUS	: Stainless steel
～031234	: Up to E.No.09003F-031234	PTT	: Power trim and tilt
031234～	: From E.No.09003F-031234		

12 x 34 x 5.6…… Figures in the description column show the dimensions of parts.
ID OD T(or W,L)

→12345-56781 (Parts No.) : indicates that the parts number was changed to 12345-56781 and the new parts are interchangeable with the former ones but the former ones are not interchangeable with new ones.

←12345-56781 (Parts No.) : indicates that the former and new parts are interchangeable with each other and both are usable.

3. INNER PARTS OF ASSEMBLY

Part name with a dot (.) in front as shown in the description column indicates the component of the assembly also available individually.

4. MODIFICATION NOTICE

A parts bulletin will be sent to you on all occasions when changes in parts occur, including interchangeable modifications between new parts and old ones.

5. NOTE

5-1. There are some different parts from those of production models among spare parts for the administrative reasons and common use of them with other models.

5-2. In respect of rubber hoses and vinyl tubes, please be sure to use them by cutting off according to the length mentioned on parts catalogue or what is actually required on the vehicle.

5-3. Note that the drawings on the illustration page are for ready reference of spare parts number, not to be used as an assembly manual. When assembling, use "SUZUKI SERVICE MANUAL".

6. MODEL NAME AND ENGINE NUMBER

MODEL	DESTINATION	TYPE	TRANSOM	ENGINE No.
DF70AT	E01,E40	07003F	L,X	07003F-510001～
DF70ATH	E01,E40	07003F	L,X	07003F-510001～
DF80AT	E01,E40	08002F	L,X	08002F-510001～
DF90AT	E01,E40	09003F	L,X	09003F-510001～
DF90ATH	E01,E40	09003F	L,X	09003F-510001～

MILLIMETER → INCH CONVERSION CHART

	0	1	2	3	4	5	6	7	8	9
00	.000	.039	.079	.118	.157	.197	.236	.276	.315	.354
10	.394	.433	.472	.512	.551	.591	.630	.669	.709	.748
20	.787	.827	.866	.906	.945	.984	1.024	1.063	1.102	1.142
30	1.181	1.220	1.260	1.299	1.339	1.378	1.417	1.457	1.496	1.535
40	1.575	1.614	1.654	1.693	1.732	1.772	1.811	1.850	1.890	1.929
50	1.969	2.008	2.047	2.087	2.126	2.165	2.205	2.214	2.283	2.323
60	2.362	2.402	2.441	2.480	2.520	2.559	2.598	2.638	2.677	2.717
70	2.756	2.795	2.835	2.874	2.913	2.953	2.992	3.031	3.071	3.110
80	3.150	3.189	3.228	3.268	3.307	3.346	3.386	3.425	3.465	3.504
90	3.543	3.583	3.622	3.661	3.701	3.740	3.780	3.819	3.858	3.898

How to read

	0	1	2	3	4
00	…	…	…	…	…
10	…	…	…	…	…
20	…	…	…	0.906	…
30	…	…	…	…	…

23 millimeters equal 0.906 inch

Contents are subject to change without notice or obligation.

FIG.111A

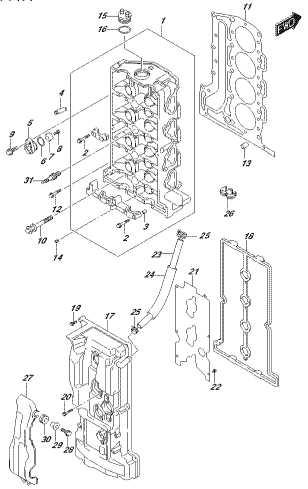

DF90A_E01_015_111A
CYLINDER HEAD

FIG.113A

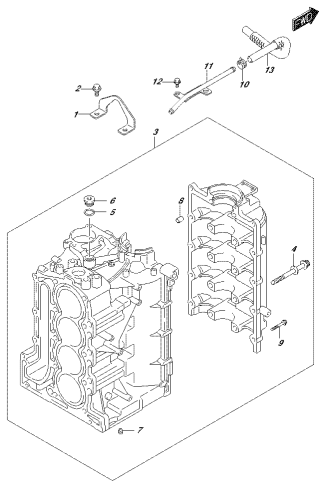

DF90A_E01_015_113A
CYLINDER BLOCK

FIG.116A

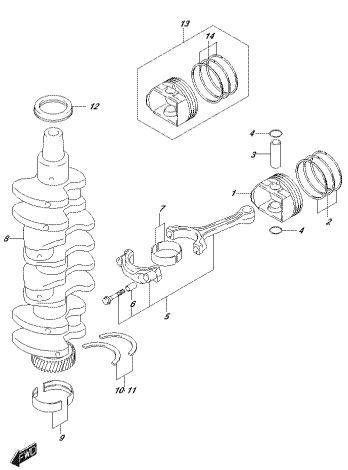

DF90A_E01_015_116A
CRANKSHAFT

FIG.119A

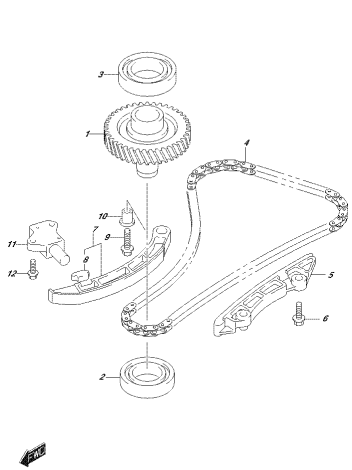

DF90A_E01_015_119A
TIMING CHAIN

FIG.121A

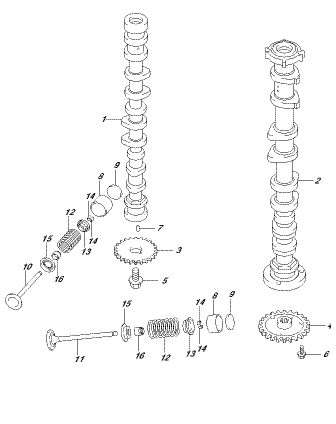

DF90A_E01_015_121A
CAMSHAFT

FIG.121B

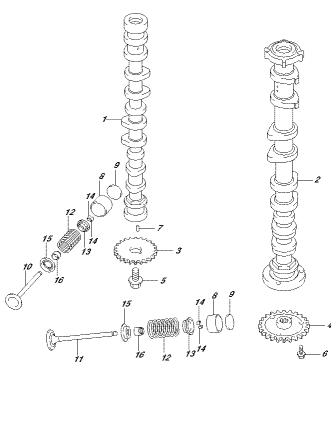

DF90A_E01_015_121B
CAMSHAFT

FIG.121C

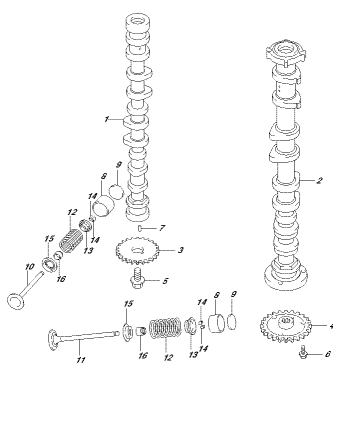

DF90A_E01_015_121C
CAMSHAFT

FIG.121D

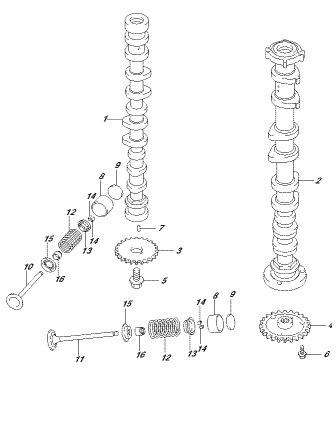

DF90A_E01_015_121D
CAMSHAFT

FIG.121E

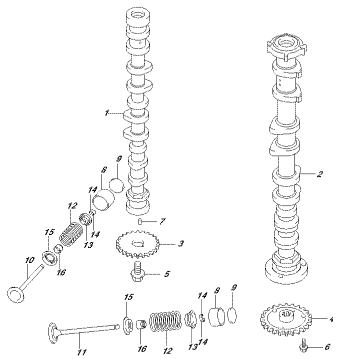

DF90A_E01_015_121E
CAMSHAFT

FIG.121F

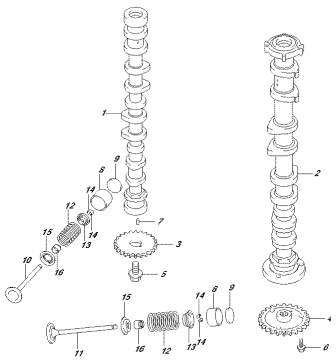

DF90A_E01_015_121F
CAMSHAFT

FIG.121G

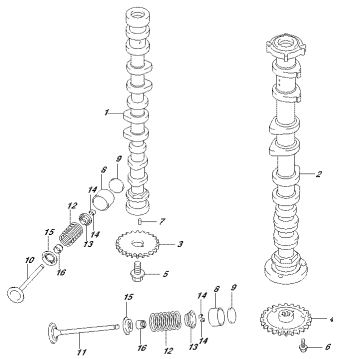

DF90A_E01_015_121G
CAMSHAFT

FIG.121H

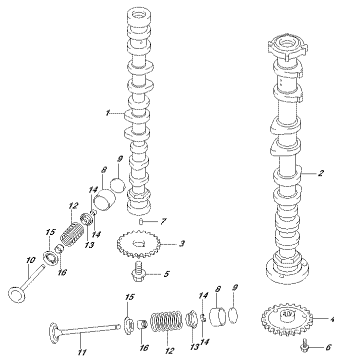

DF90A_E01_015_121H
CAMSHAFT

FIG.121J

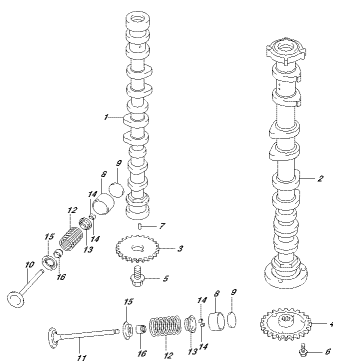

DF90A_E01_015_121J
CAMSHAFT

FIG.121K

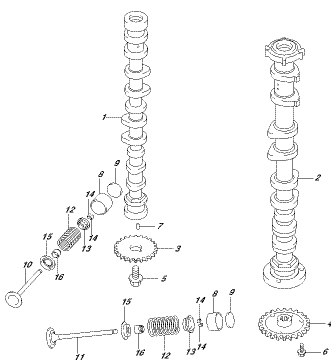

DF90A_E01_015_121K
CAMSHAFT

FIG.122A

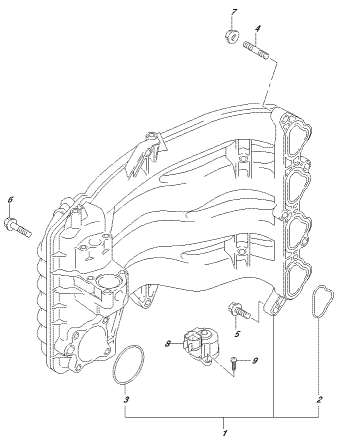

DF90A_E01_015_122A
INTAKE MANIFOLD

FIG.134A

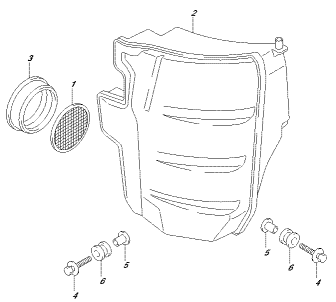

DF90A_E01_015_134A
SILENCER

FIG. 136A

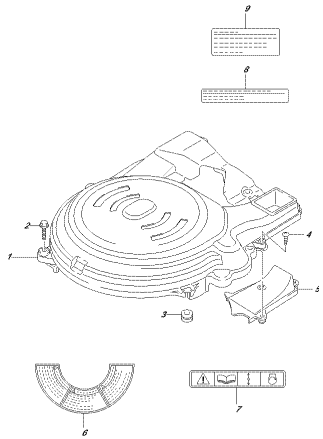

DF90A_E01_015_136A
RING GEAR COVER

FIG. 136B

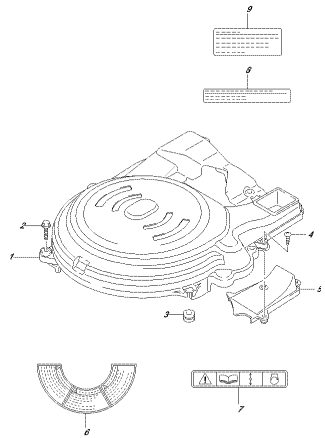

DF90A_E01_015_136B
RING GEAR COVER

FIG. 136C

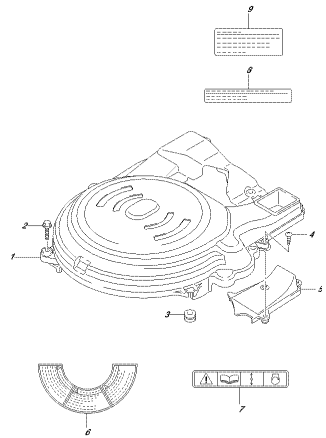

DF90A_E01_015_136C
RING GEAR COVER

FIG. 136D

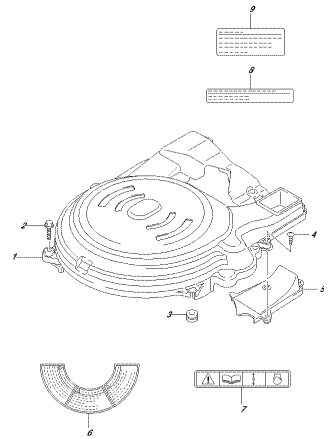

DF90A_E01_015_136D
RING GEAR COVER

FIG. 136E

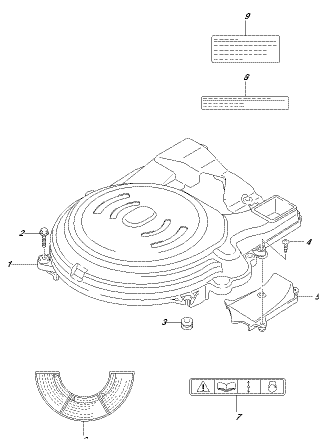

DF90A_E01_015_136E
RING GEAR COVER

FIG. 136F

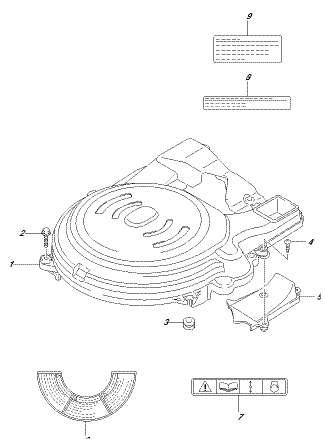

DF90A_E01_015_136F
RING GEAR COVER

FIG. 136G

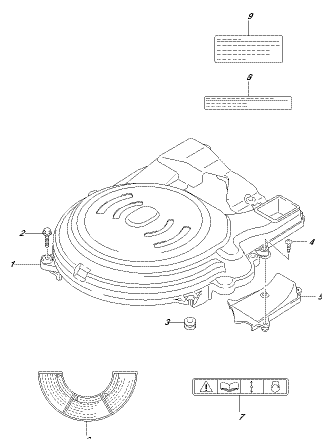

DF90A_E01_015_136G
RING GEAR COVER

FIG. 136H

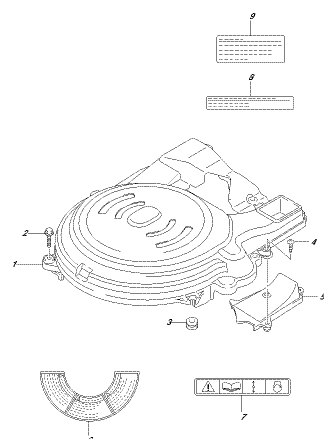

DF90A_E01_015_136H
RING GEAR COVER

FIG.136J

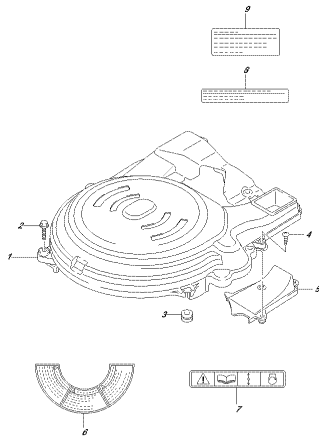

DF90A_E01_015_136J
RING GEAR COVER

FIG.136K

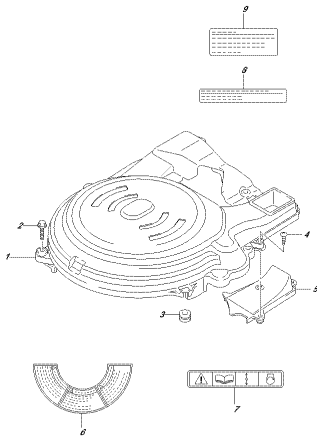

DF90A_E01_015_136K
RING GEAR COVER

FIG.140A

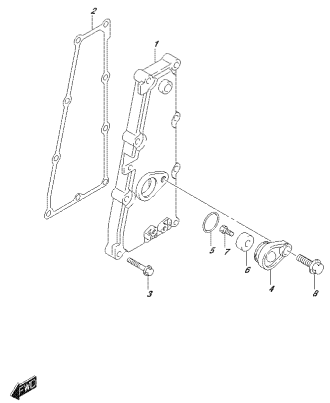

DF90A_E01_015_140A
EXHAUST COVER

FIG.143A

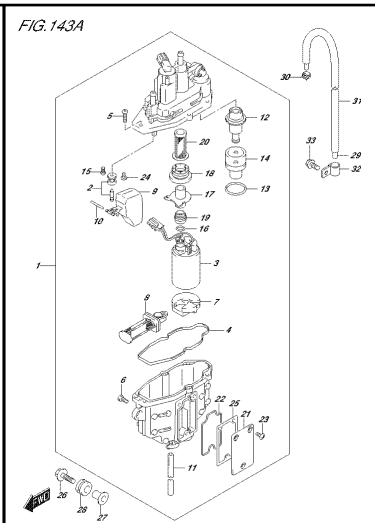

DF90A_E01_015_143A
FUEL VAPOR SEPARATOR

FIG.143B

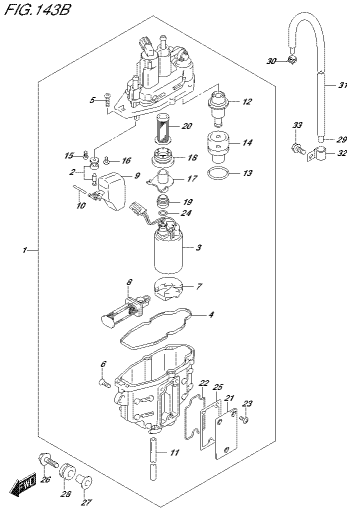

DF90A_E01_015_143B
FUEL VAPOR SEPARATOR

FIG.143C

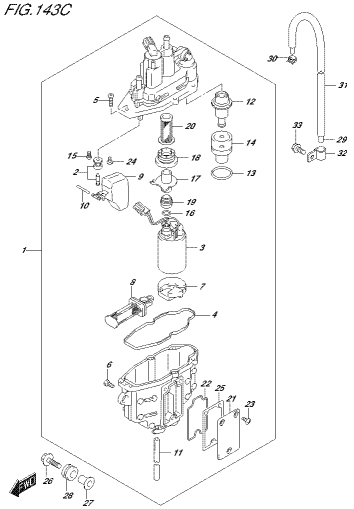

DF90A_E01_015_143C
FUEL VAPOR SEPARATOR

FIG.143D

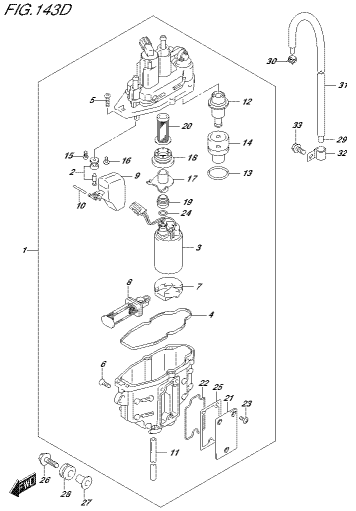

DF90A_E01_015_143D
FUEL VAPOR SEPARATOR

FIG.143E

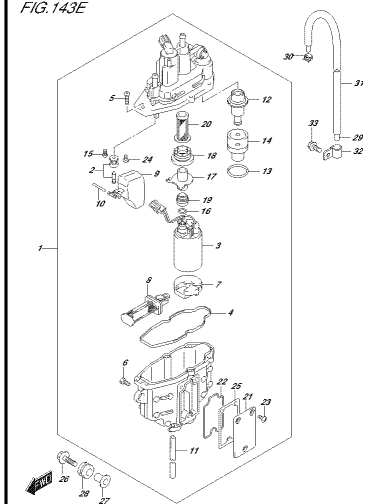

DF90A_E01_015_143E
FUEL VAPOR SEPARATOR

FIG.143F

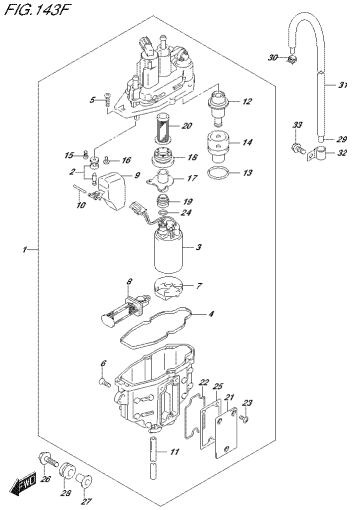

DF90A_E01_015_143F
FUEL VAPOR SEPARATOR

FIG.143G

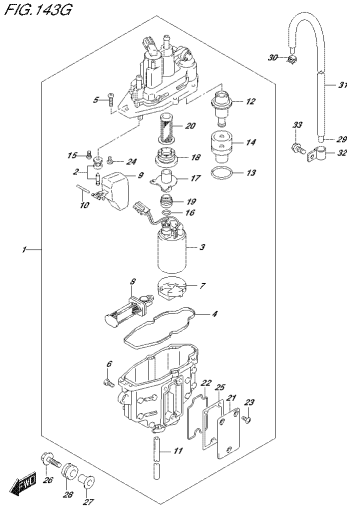

DF90A_E01_015_143G
FUEL VAPOR SEPARATOR

FIG.143H

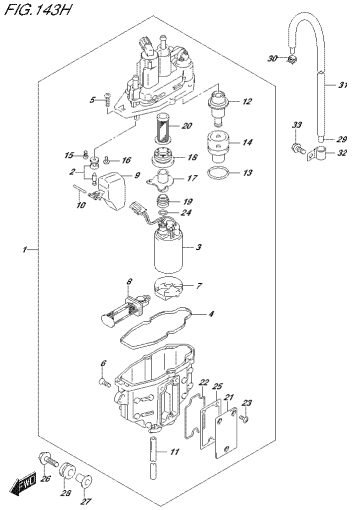

DF90A_E01_015_143H
FUEL VAPOR SEPARATOR

FIG.143J

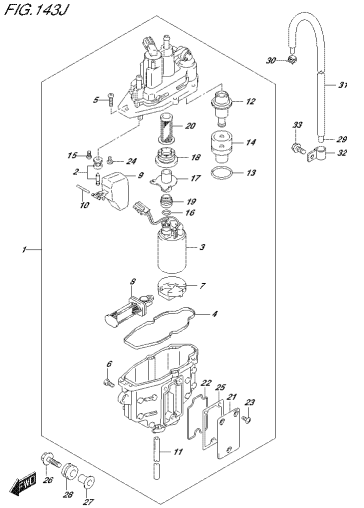

DF90A_E01_015_143J
FUEL VAPOR SEPARATOR

FIG.143K

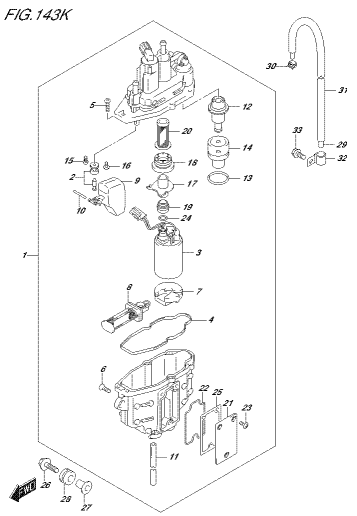

DF90A_E01_015_143K
FUEL VAPOR SEPARATOR

FIG.144A

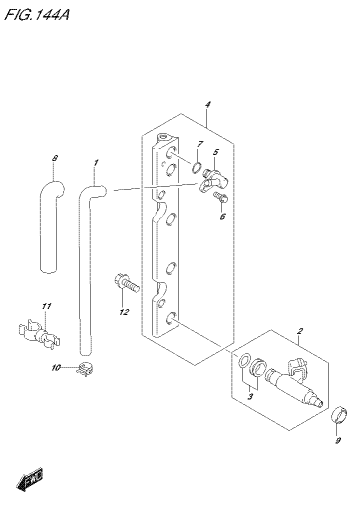

DF90A_E01_015_144A
FUEL INJECTOR

FIG.144B

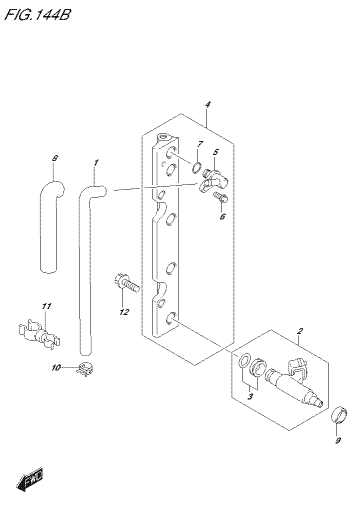

DF90A_E01_015_144B
FUEL INJECTOR

FIG.144C

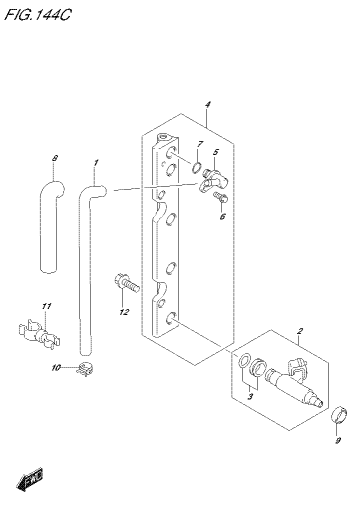

DF90A_E01_015_144C
FUEL INJECTOR

FIG.144D

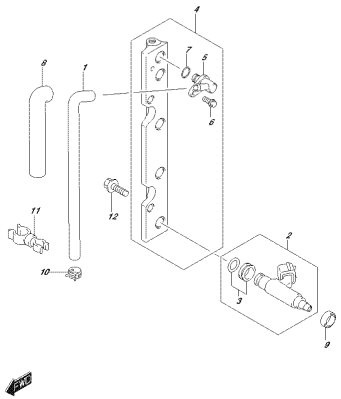

DF90A_E01_015_144D
FUEL INJECTOR

FIG.144E

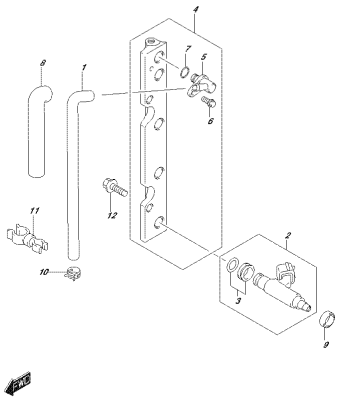

DF90A_E01_015_144E
FUEL INJECTOR

FIG.144F

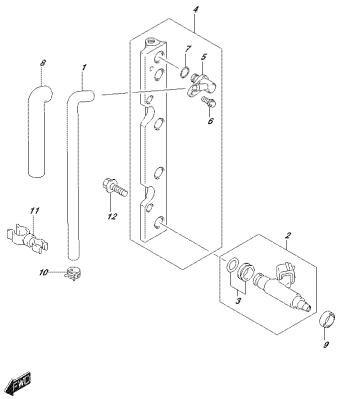

DF90A_E01_015_144F
FUEL INJECTOR

FIG.144G

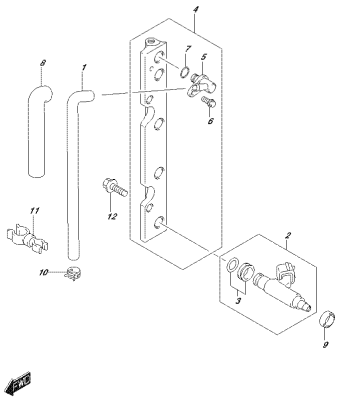

DF90A_E01_015_144G
FUEL INJECTOR

FIG.144H

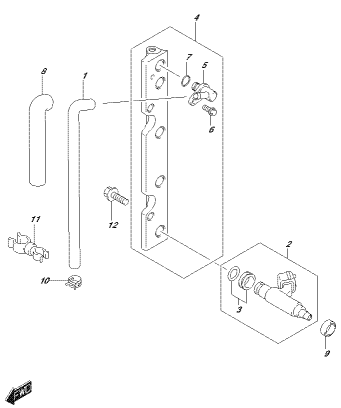

DF90A_E01_015_144H
FUEL INJECTOR

FIG.144J

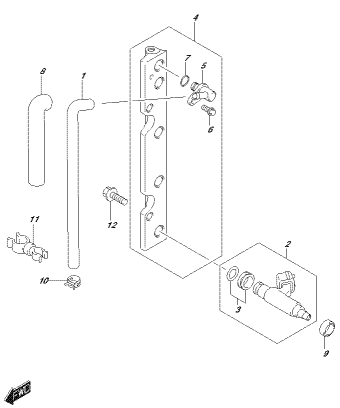

DF90A_E01_015_144J
FUEL INJECTOR

FIG.144K

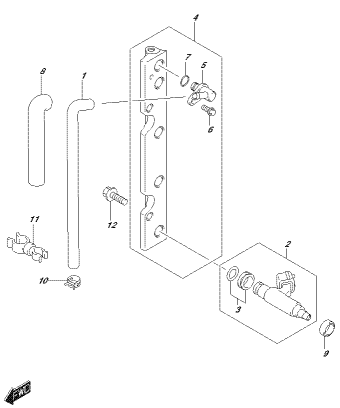

DF90A_E01_015_144K
FUEL INJECTOR

FIG.146A

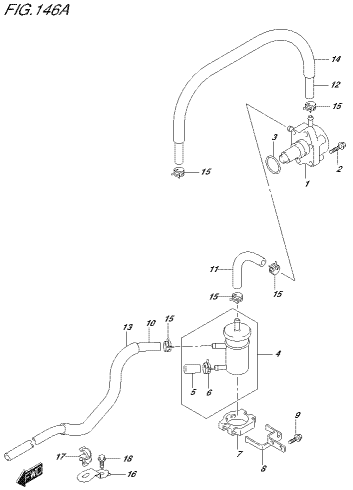

DF90A_E01_015_146A
FUEL PUMP

FIG.160A

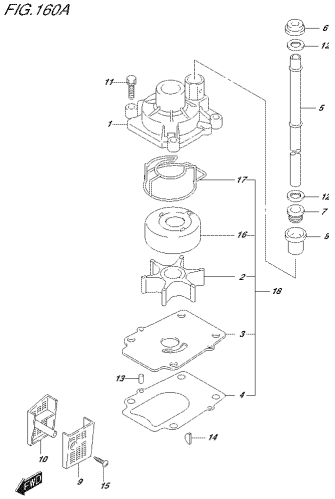

DF90A_E01_015_160A
WATER PUMP

FIG.160B

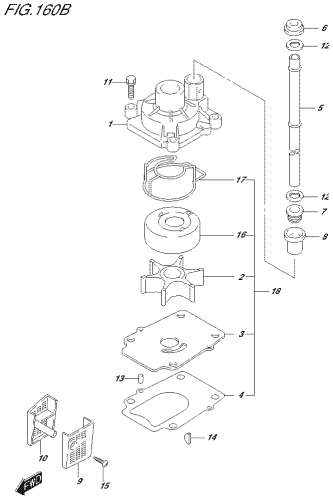

DF90A_E01_015_160B
WATER PUMP

FIG.160C

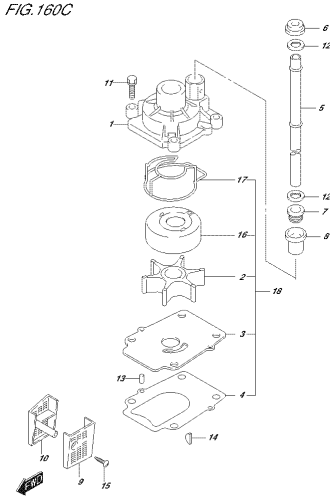

DF90A_E01_015_160C
WATER PUMP

FIG.160D

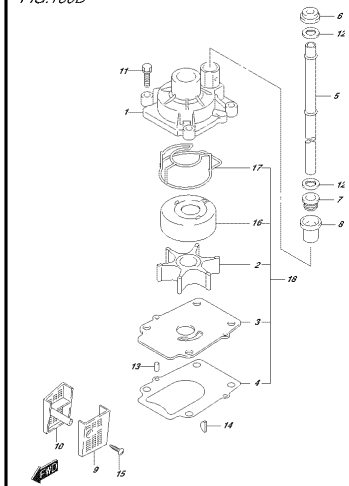

DF90A_E01_015_160D
WATER PUMP

FIG.160E

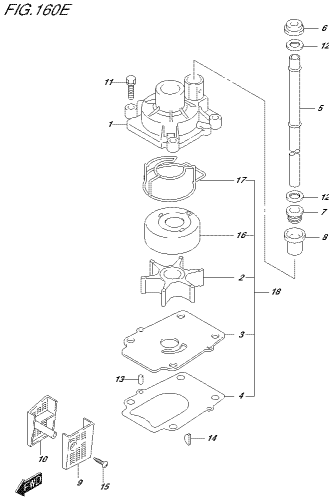

DF90A_E01_015_160E
WATER PUMP

FIG.160F

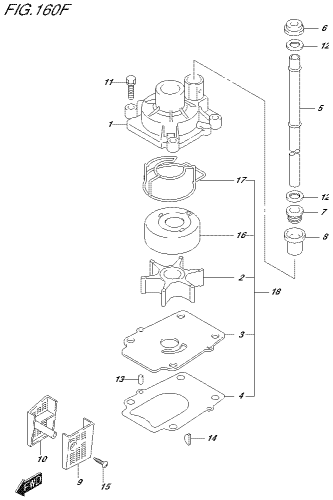

DF90A_E01_015_160F
WATER PUMP

FIG.160G

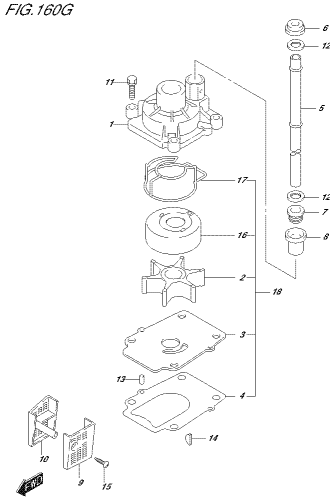

DF90A_E01_015_160G
WATER PUMP

FIG.160H

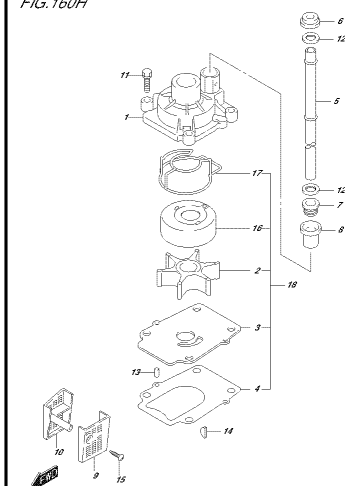

DF90A_E01_015_160H
WATER PUMP

FIG.160J

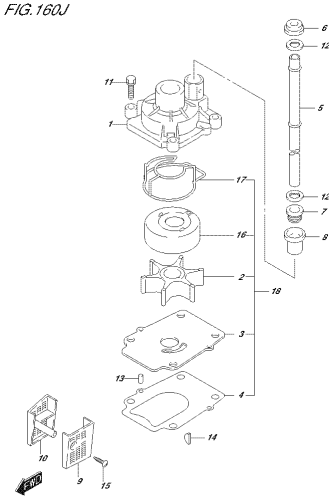

DF90A_E01_015_160J
WATER PUMP

FIG.160K

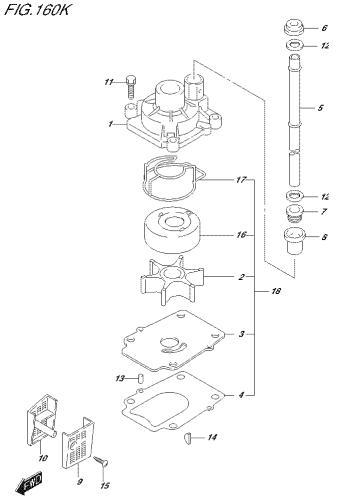

DF90A_E01_015_160K
WATER PUMP

FIG.162A

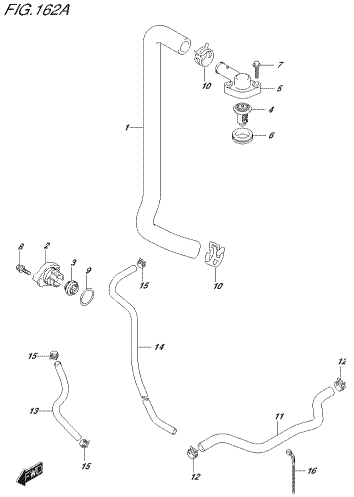

DF90A_E01_015_162A
THERMOSTAT

FIG.162B

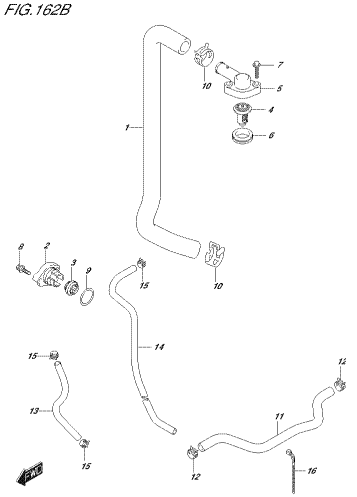

DF90A_E01_015_162B
THERMOSTAT

FIG.162C

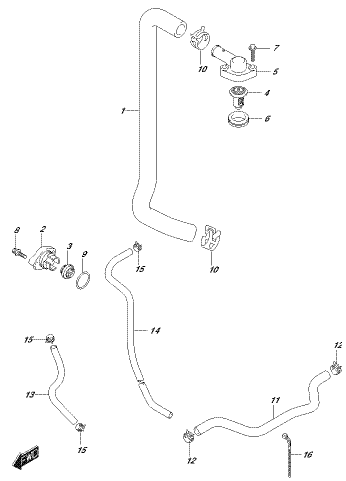

DF90A_E01_015_162C
THERMOSTAT

FIG.162D

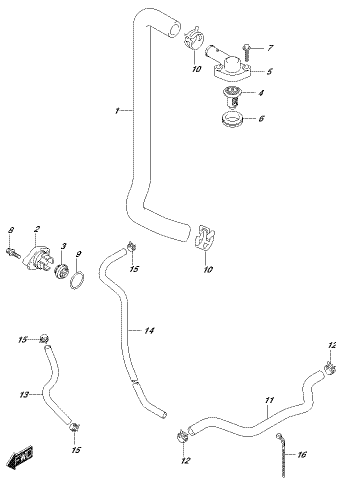

DF90A_E01_015_162D
THERMOSTAT

FIG.162E

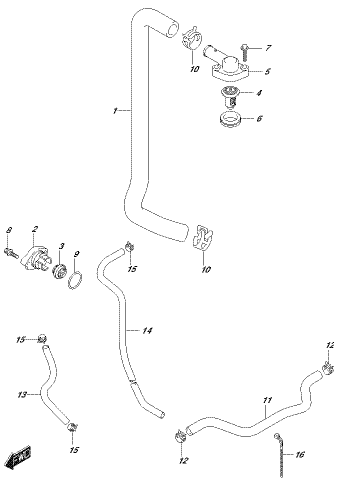

DF90A_E01_015_162E
THERMOSTAT

FIG.162F

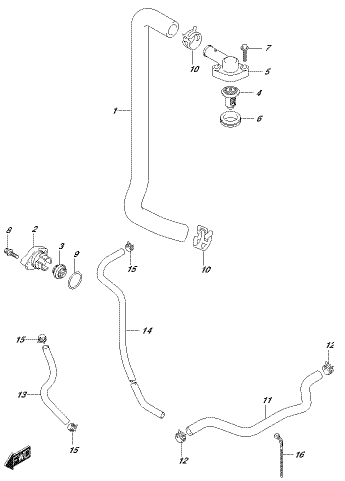

DF90A_E01_015_162F
THERMOSTAT

FIG.162G

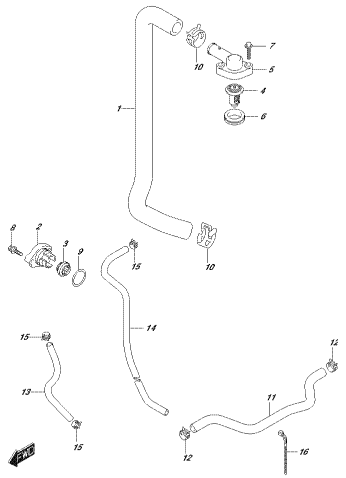

DF90A_E01_015_162G
THERMOSTAT

FIG.162H

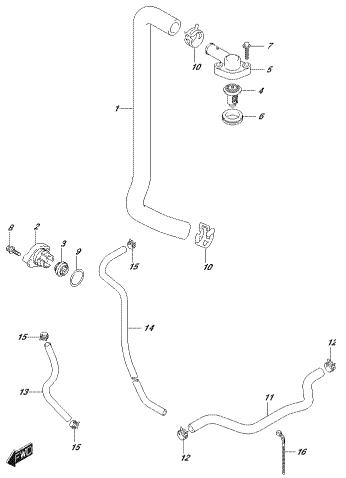

DF90A_E01_015_162H
THERMOSTAT

FIG.162J

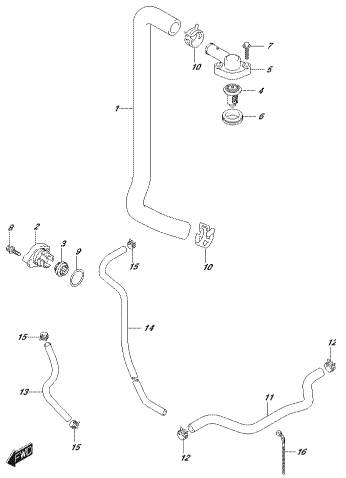

DF90A_E01_015_162J
THERMOSTAT

FIG.162K

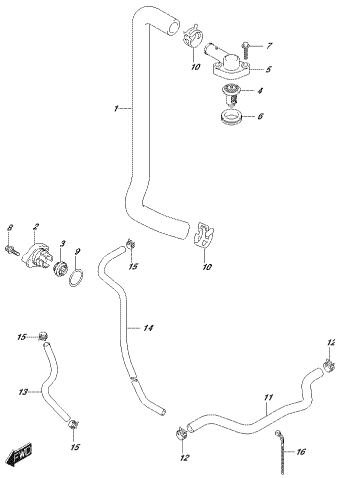

DF90A_E01_015_162K
THERMOSTAT

FIG.163A

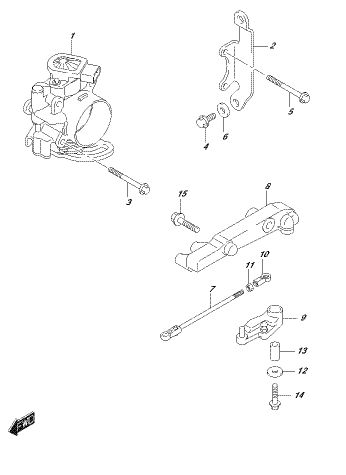

DF90A_E01_015_163A
THROTTLE BODY

FIG.163B

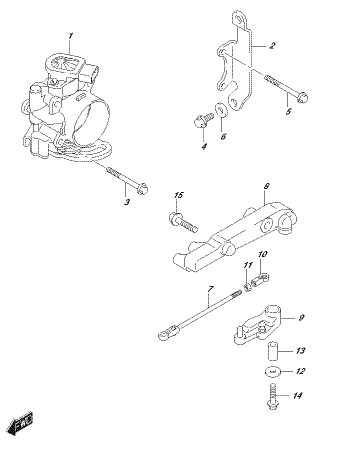

DF90A_E01_015_163B
THROTTLE BODY

FIG.163C

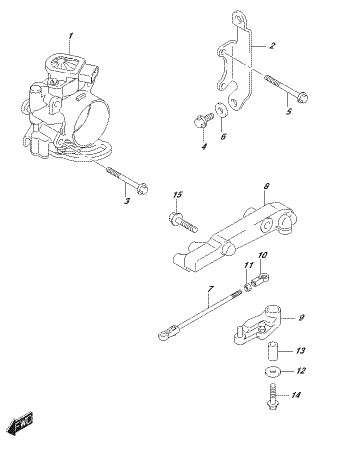

DF90A_E01_015_163C
THROTTLE BODY

FIG.163D

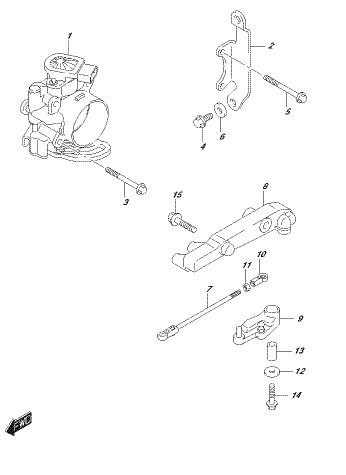

DF90A_E01_015_163D
THROTTLE BODY

FIG.163E

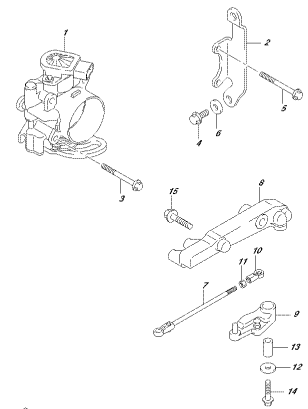

DF90A_E01_015_163E
THROTTLE BODY

FIG.163F

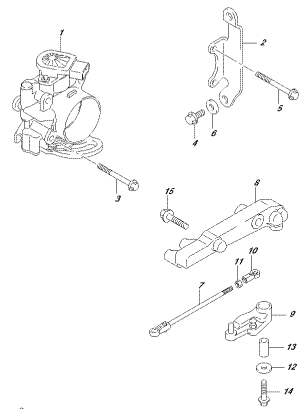

DF90A_E01_015_163F
THROTTLE BODY

FIG.163G

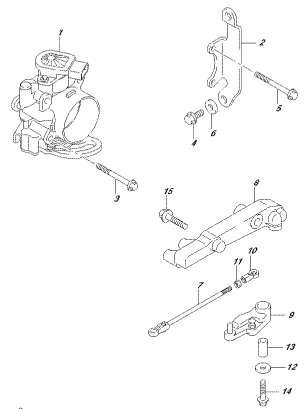

DF90A_E01_015_163G
THROTTLE BODY

FIG.163H

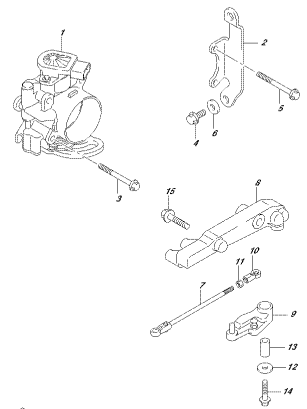

DF90A_E01_015_163H
THROTTLE BODY

FIG.163J

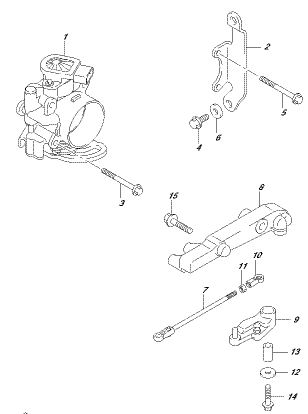

DF90A_E01_015_163J
THROTTLE BODY

FIG.163K

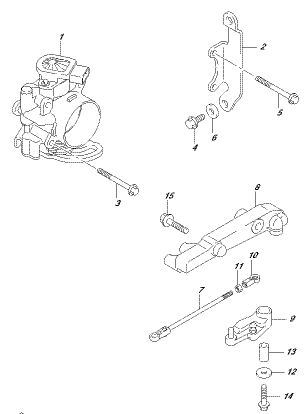

DF90A_E01_015_163K
THROTTLE BODY

FIG.175A

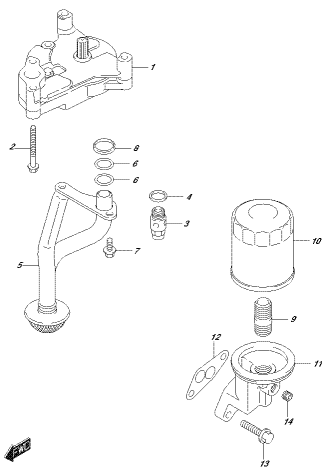

DF90A_E01_015_175A
OIL PUMP

FIG.180A

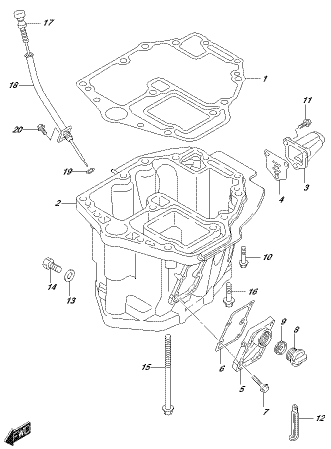

DF90A_E01_015_180A
OIL PAN

FIG.180B

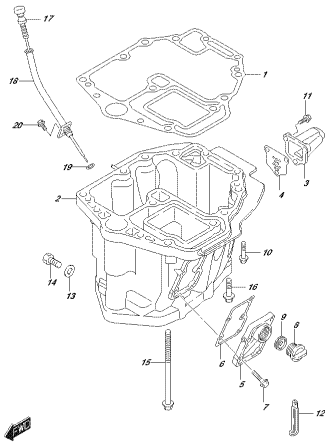

DF90A_E01_015_180B
OIL PAN

FIG.180C

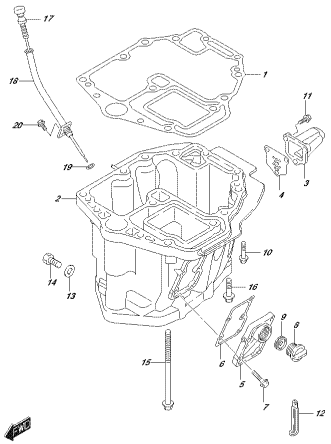

DF90A_E01_015_180C
OIL PAN

FIG.180D

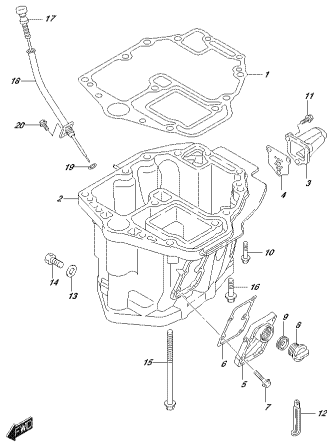

DF90A_E01_015_180D
OIL PAN

FIG.180E

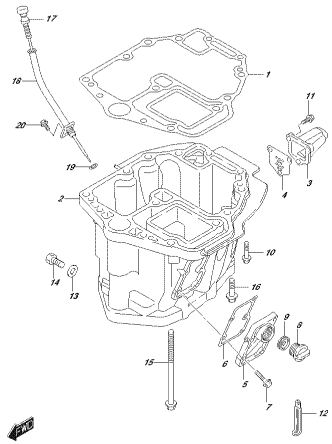

DF90A_E01_015_180E
OIL PAN

FIG.180F

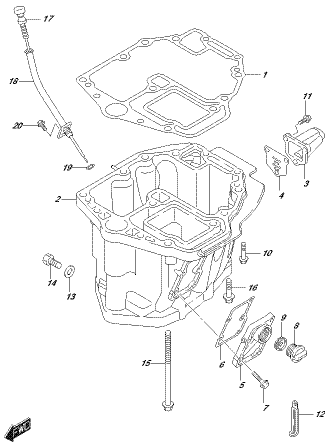

DF90A_E01_015_180F
OIL PAN

FIG.180G

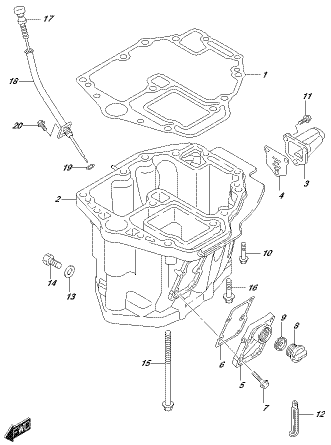

DF90A_E01_015_180G
OIL PAN

FIG.180H

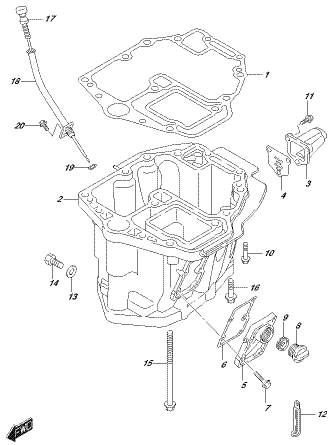

DF90A_E01_015_180H
OIL PAN

FIG.180J

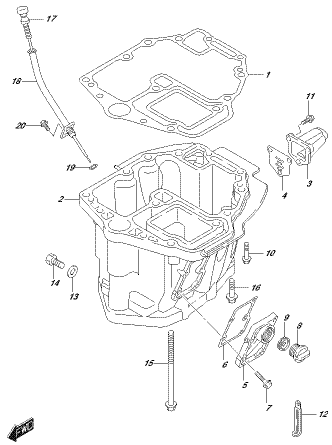

DF90A_E01_015_180J
OIL PAN

FIG.180K

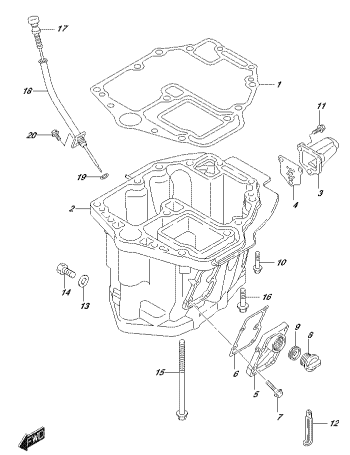

DF90A_E01_015_180K
OIL PAN

FIG.204A

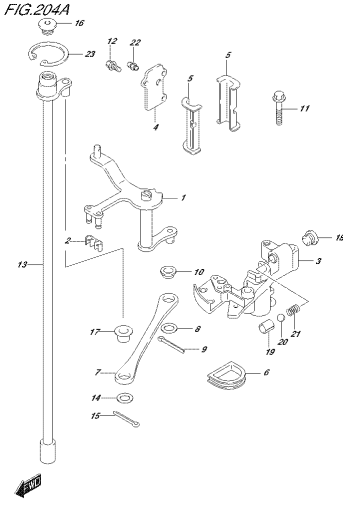

DF90A_E01_015_204A
CLUTCH SHAFT

FIG.206A

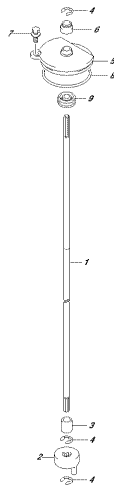

DF90A_E01_015_206A
CLUTCH ROD

FIG.220A

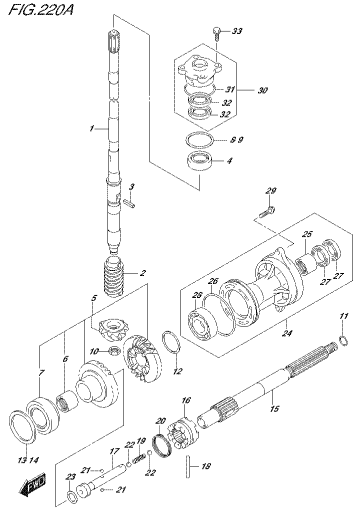

DF90A_E01_015_220A
TRANSMISSION

FIG.220B

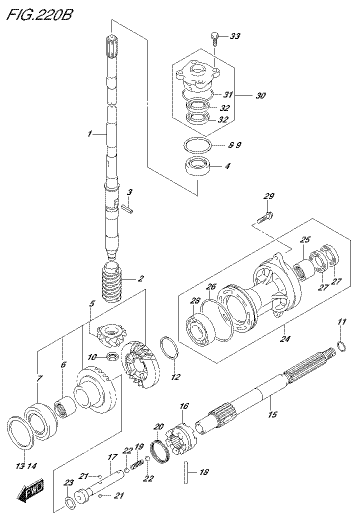

DF90A_E01_015_220B
TRANSMISSION

FIG.220C

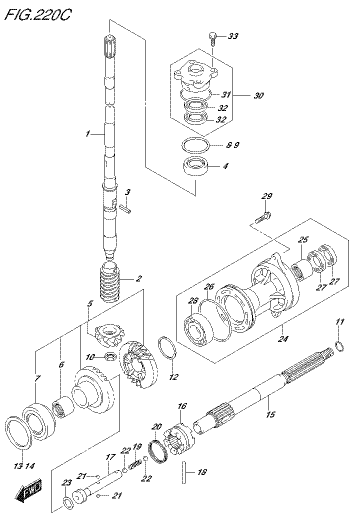

DF90A_E01_015_220C
TRANSMISSION

FIG.220D

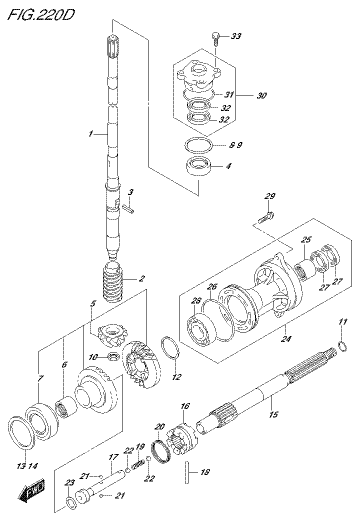

DF90A_E01_015_220D
TRANSMISSION

FIG.220E

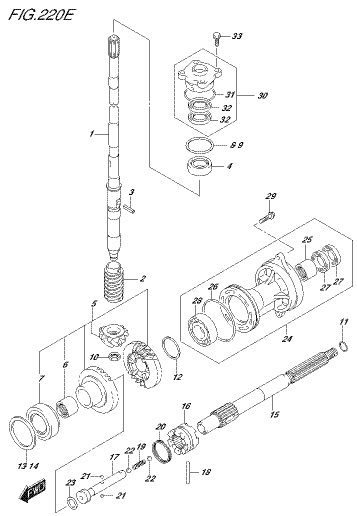

DF90A_E01_015_220E
TRANSMISSION

FIG.220F

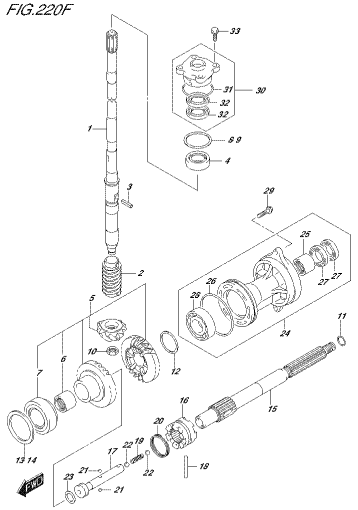

DF90A_E01_015_220F
TRANSMISSION

FIG.220G

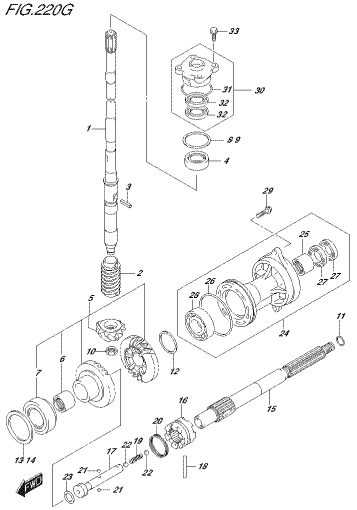

DF90A_E01_015_220G
TRANSMISSION

FIG.220H

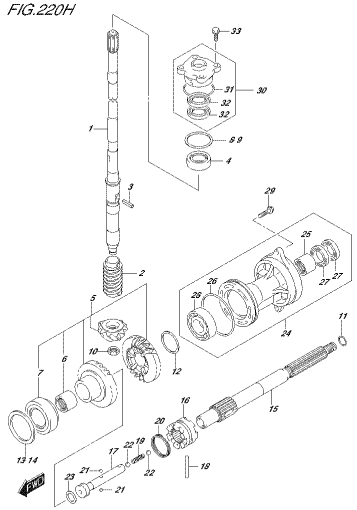

DF90A_E01_015_220H
TRANSMISSION

FIG.220J

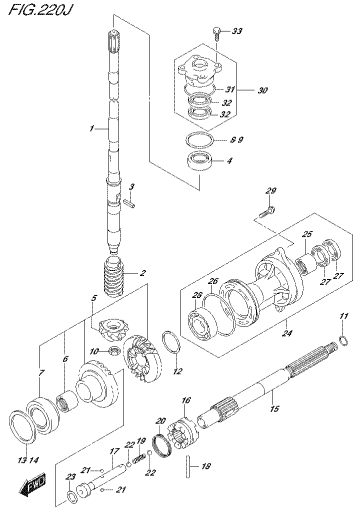

DF90A_E01_015_220J
TRANSMISSION

FIG.220K

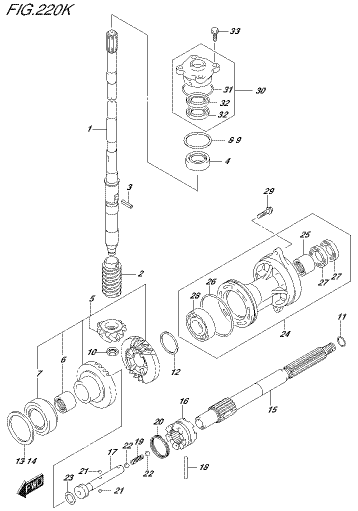

DF90A_E01_015_220K
TRANSMISSION

FIG.301A

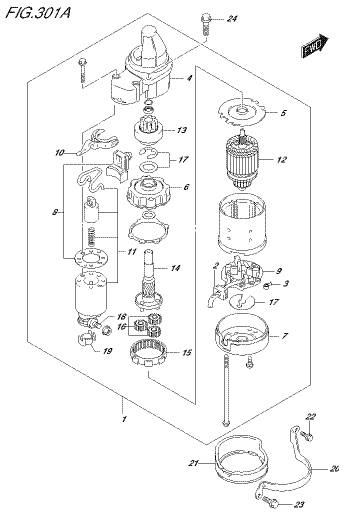

DF90A_E01_015_301A
STARTING MOTOR

FIG.303A

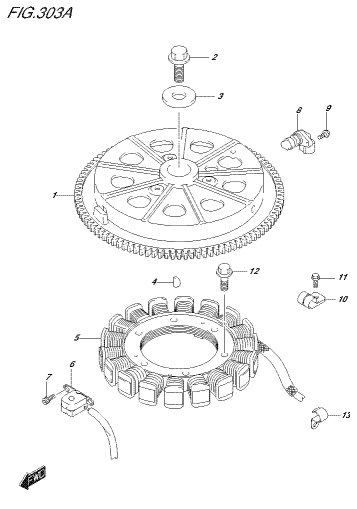

DF90A_E01_015_303A
MAGNETO

FIG.310A

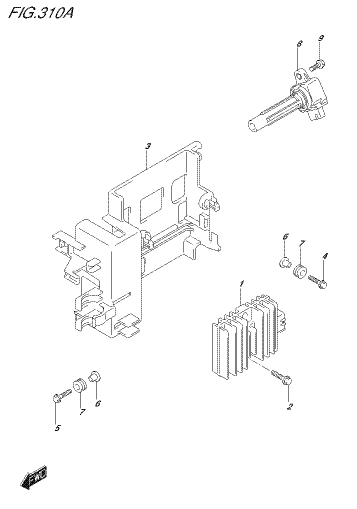

DF90A_E01_015_310A
RECTIFIER/IGNITION COIL

FIG.315A

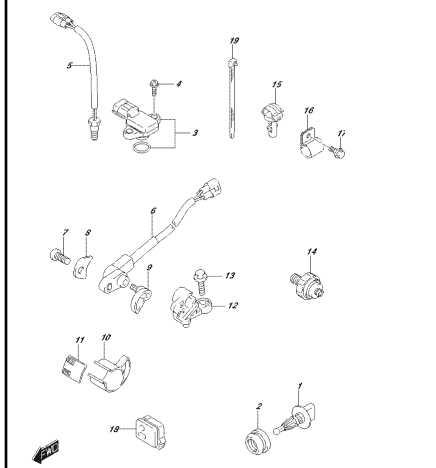

DF90A_E01_015_315A
SENSOR

FIG.322A

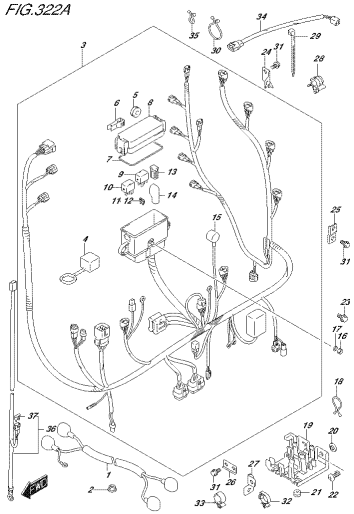

DF90A_E01_015_322A
HARNESS

FIG.326A

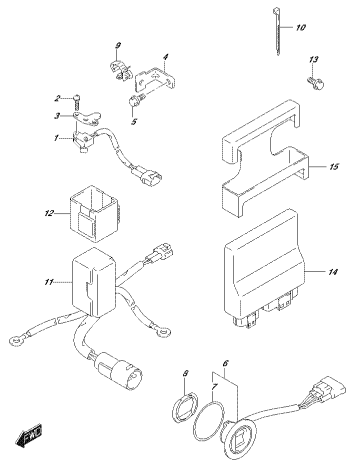

DF90A_E01_015_326A
PTT SWITCH/ENGINE CONTROL UNIT

FIG.326B

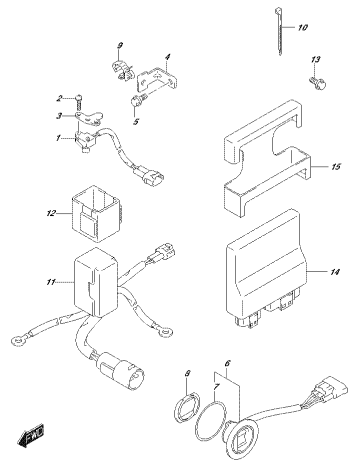

DF90A_E01_015_326B
PTT SWITCH/ENGINE CONTROL UNIT

FIG.326C

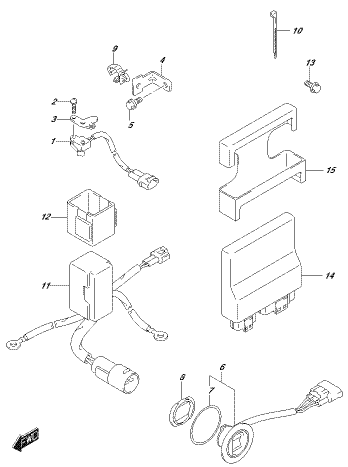

DF90A_E01_015_326C
PTT SWITCH/ENGINE CONTROL UNIT

FIG.326D

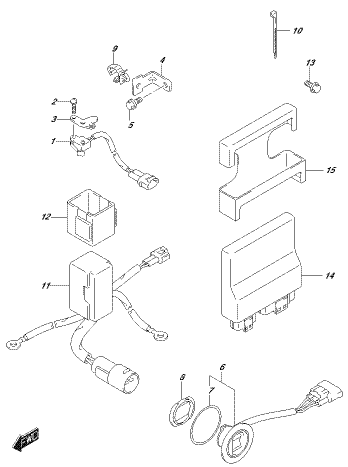

DF90A_E01_015_326D
PTT SWITCH/ENGINE CONTROL UNIT

FIG.326E

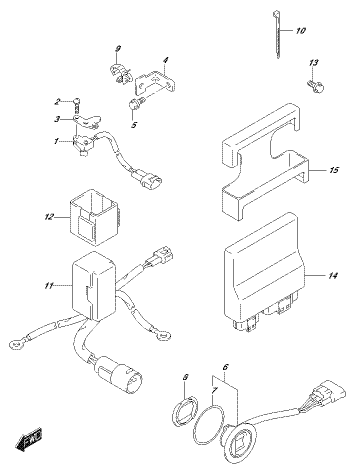

DF90A_E01_015_326E
PTT SWITCH/ENGINE CONTROL UNIT

FIG.326F

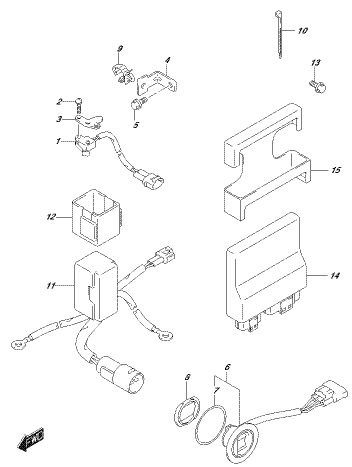

DF90A_E01_015_326F
PTT SWITCH/ENGINE CONTROL UNIT

FIG.326G

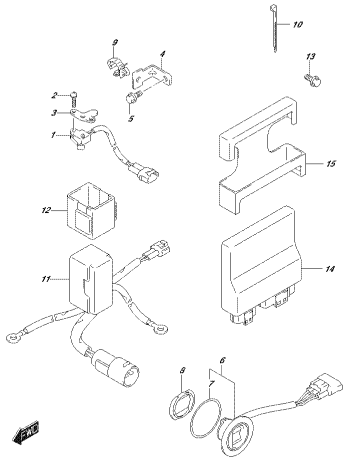

DF90A_E01_015_326G
PTT SWITCH/ENGINE CONTROL UNIT

FIG.326H

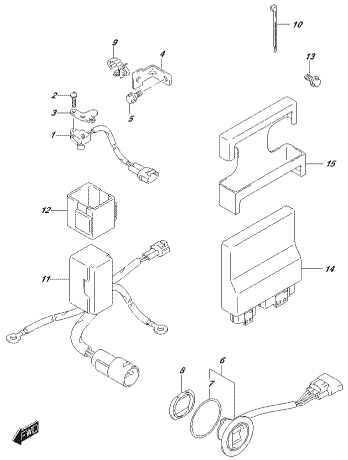

DF90A_E01_015_326H
PTT SWITCH/ENGINE CONTROL UNIT

FIG.326J

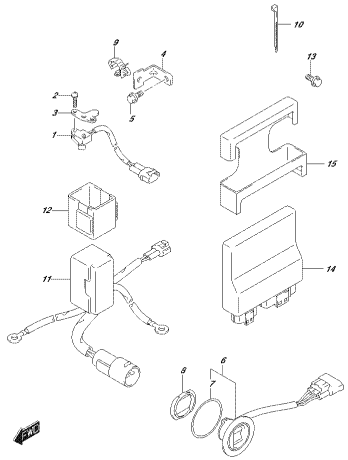

DF90A_E01_015_326J
PTT SWITCH/ENGINE CONTROL UNIT

FIG.326K

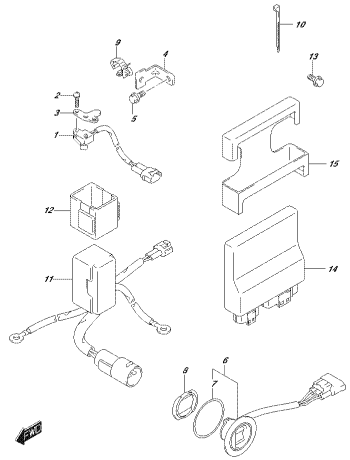

DF90A_E01_015_326K
PTT SWITCH/ENGINE CONTROL UNIT

FIG.335A

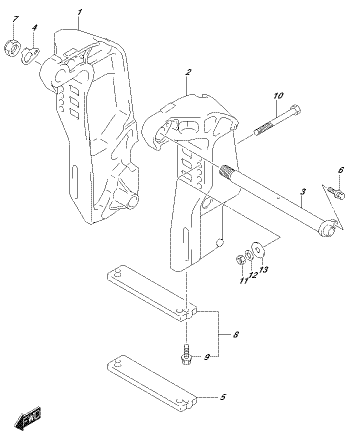

DF90A_E01_015_335A
CLAMP BRACKET

FIG.335B

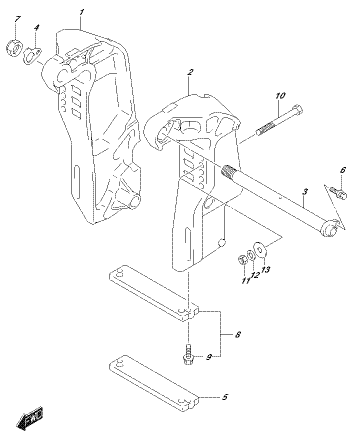

DF90A_E01_015_335B
CLAMP BRACKET

FIG.335C

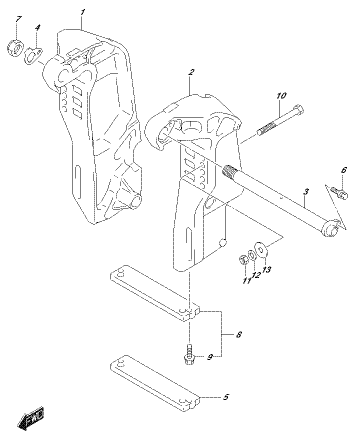

DF90A_E01_015_335C
CLAMP BRACKET

FIG.335D

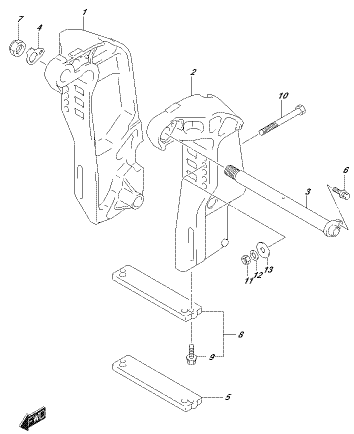

DF90A_E01_015_335D
CLAMP BRACKET

FIG.335E

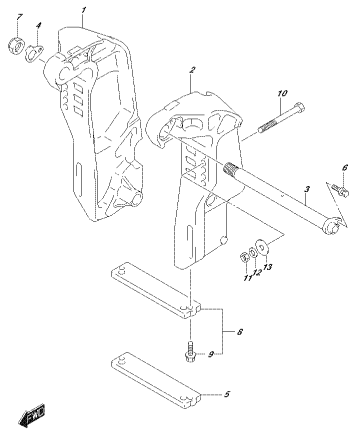

DF90A_E01_015_335E
CLAMP BRACKET

FIG.335F

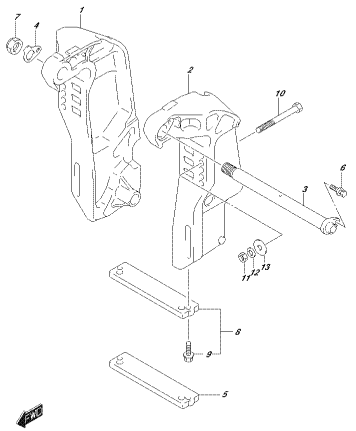

DF90A_E01_015_335F
CLAMP BRACKET

FIG.335G

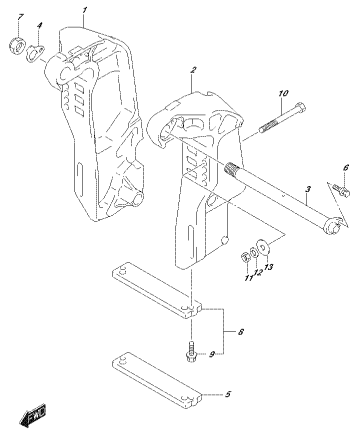

DF90A_E01_015_335G
CLAMP BRACKET

FIG.335H

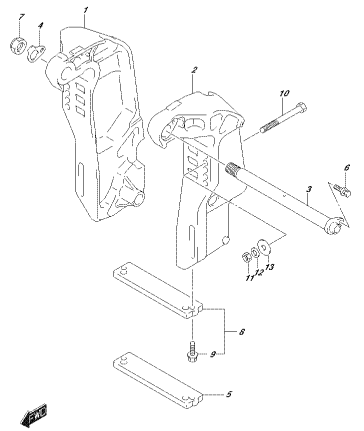

DF90A_E01_015_335H
CLAMP BRACKET

FIG.335J

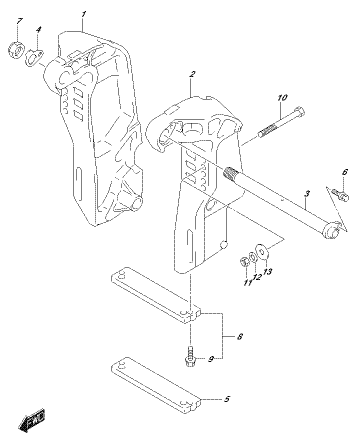

DF90A_E01_015_335J
CLAMP BRACKET

FIG.335K

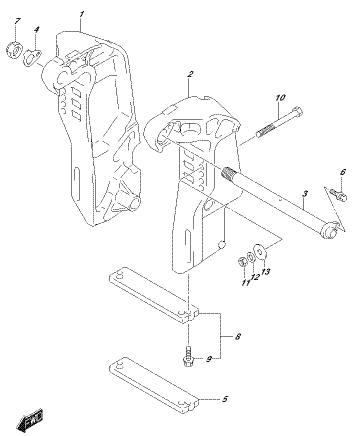

DF90A_E01_015_335K
CLAMP BRACKET

FIG.336A

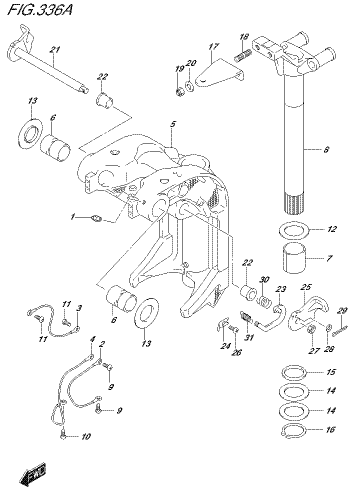

DF90A_E01_015_336A
SWIVEL BRACKET

FIG.336B

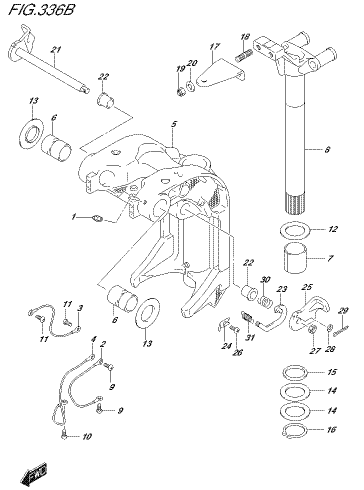

DF90A_E01_015_336B
SWIVEL BRACKET

FIG.336C

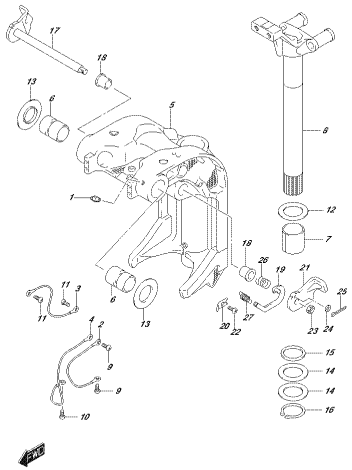

DF90A_E01_015_336C
SWIVEL BRACKET

FIG.336D

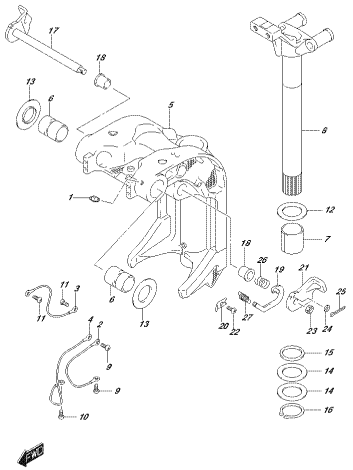

DF90A_E01_015_336D
SWIVEL BRACKET

FIG.336E

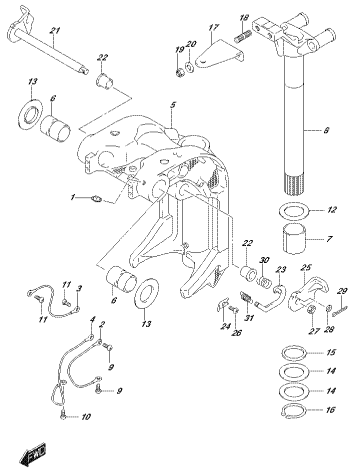

DF90A_E01_015_336E
SWIVEL BRACKET

FIG.336F

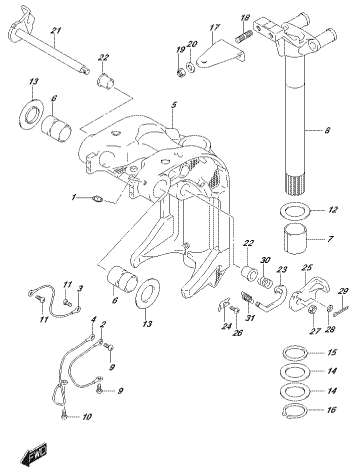

DF90A_E01_015_336F
SWIVEL BRACKET

FIG.336G

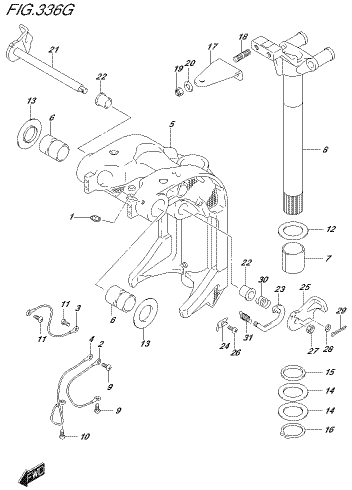

DF90A_E01_015_336G
SWIVEL BRACKET

FIG.336H

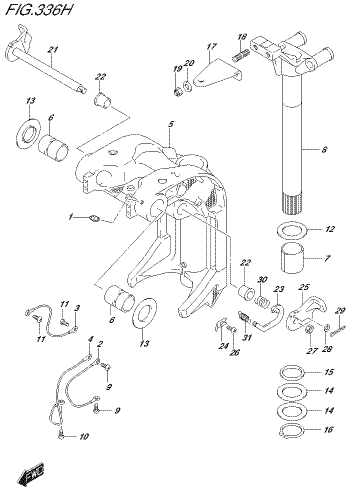

DF90A_E01_015_336H
SWIVEL BRACKET

FIG.336J

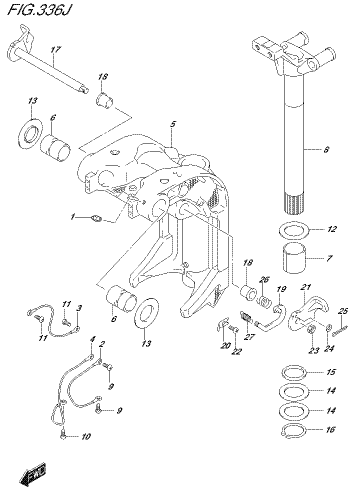

DF90A_E01_015_336J
SWIVEL BRACKET

FIG.336K

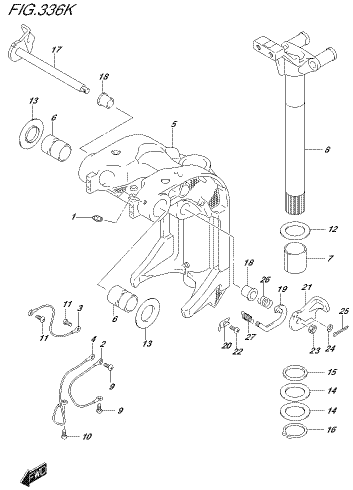

DF90A_E01_015_336K
SWIVEL BRACKET

FIG.337A

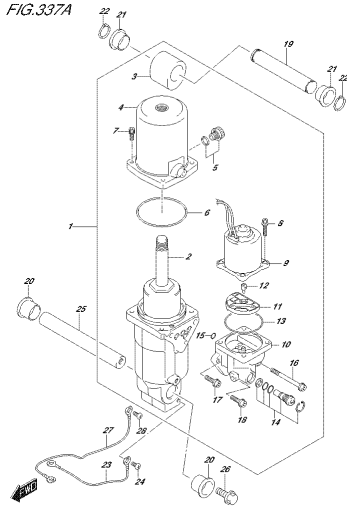

DF90A_E01_015_337A
TRIM CYLINDER

FIG.340A

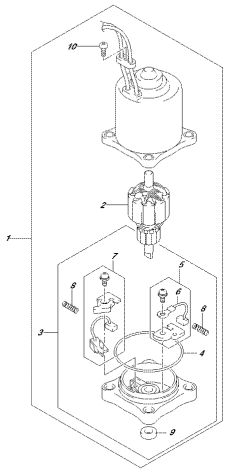

DF90A_E01_015_340A
PTT MOTOR

FIG.401A

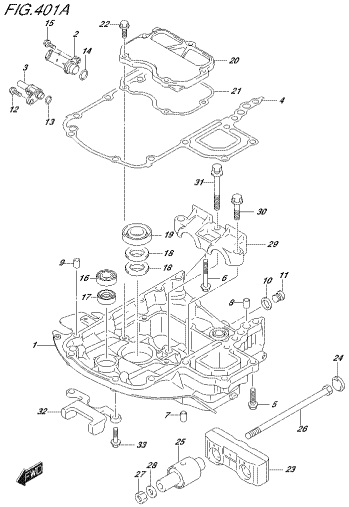

DF90A_E01_015_401A
ENGINE HOLDER

FIG.401B

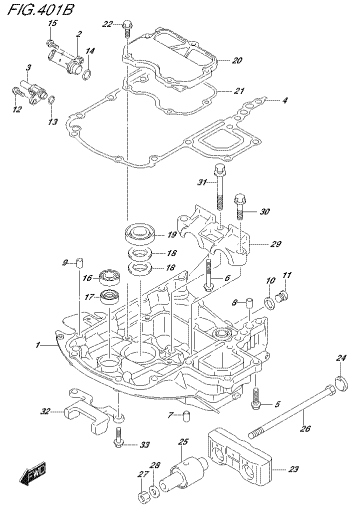

DF90A_E01_015_401B
ENGINE HOLDER

FIG.401C

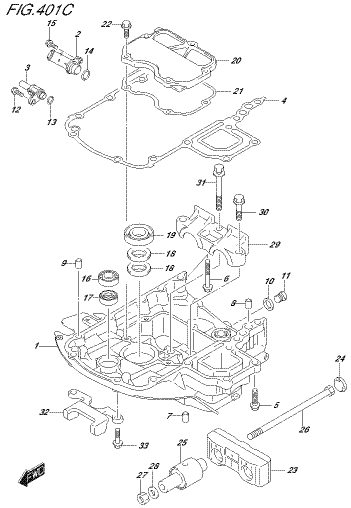

DF90A_E01_015_401C
ENGINE HOLDER

FIG.401D

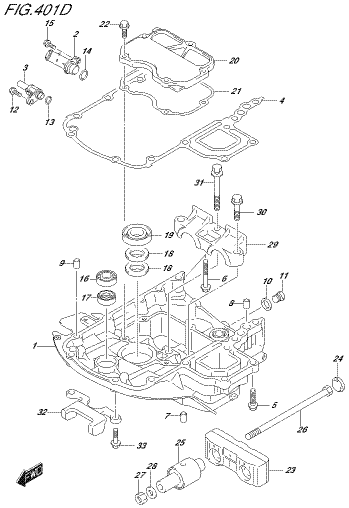

DF90A_E01_015_401D
ENGINE HOLDER

FIG.401E

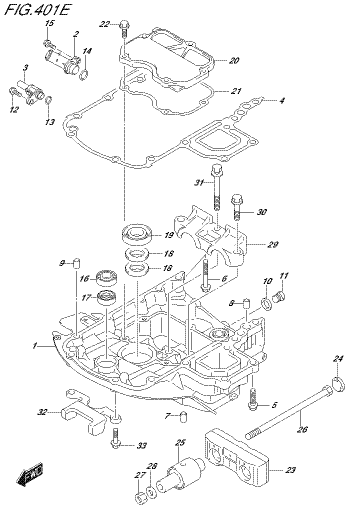

DF90A_E01_015_401E
ENGINE HOLDER

FIG.401F

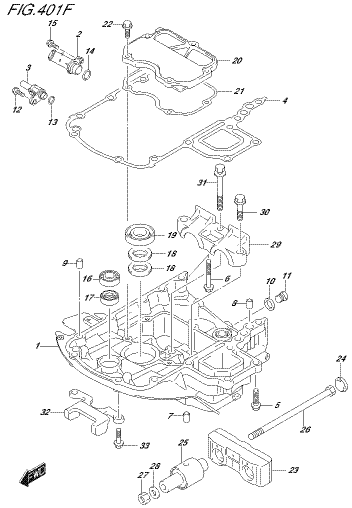

DF90A_E01_015_401F
ENGINE HOLDER

FIG.401G

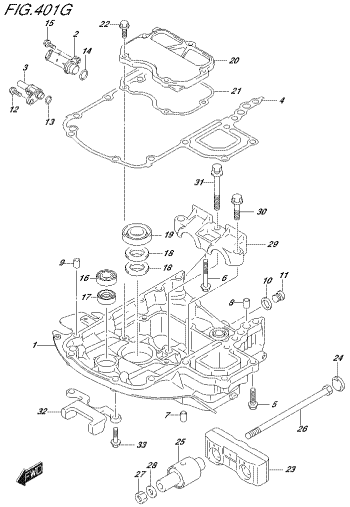

DF90A_E01_015_401G
ENGINE HOLDER

FIG.401H

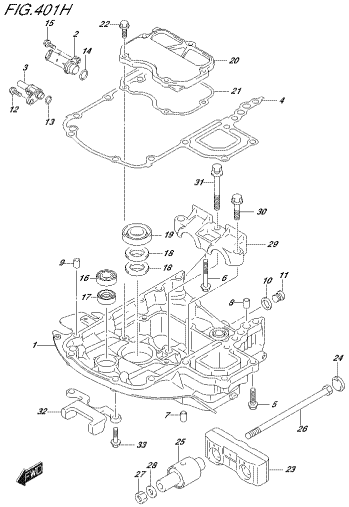

DF90A_E01_015_401H
ENGINE HOLDER

FIG.401J

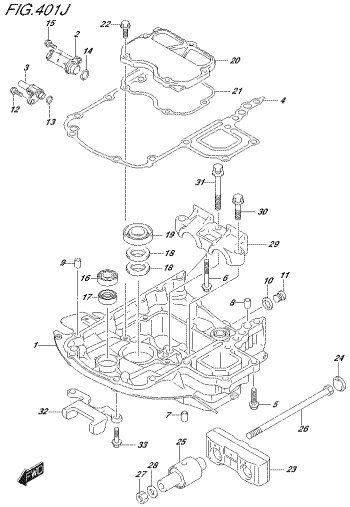

DF90A_E01_015_401J
ENGINE HOLDER

FIG.401K

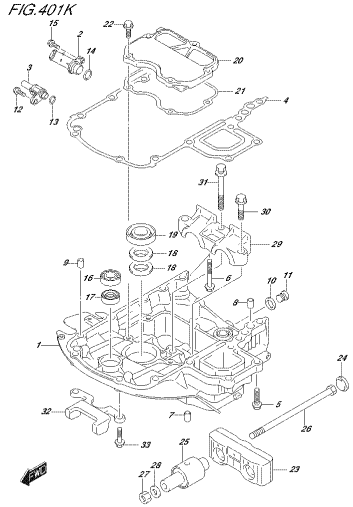

DF90A_E01_015_401K
ENGINE HOLDER

FIG.405A

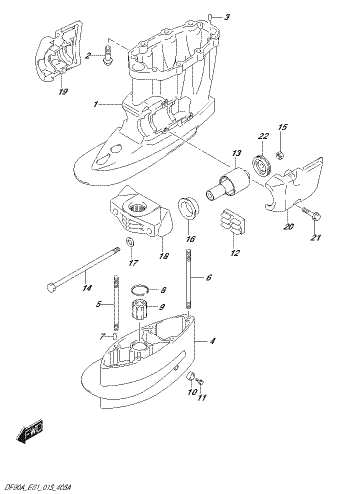

DF90A_E01_015_405A
DRIVE SHAFT HOUSING

FIG.405B

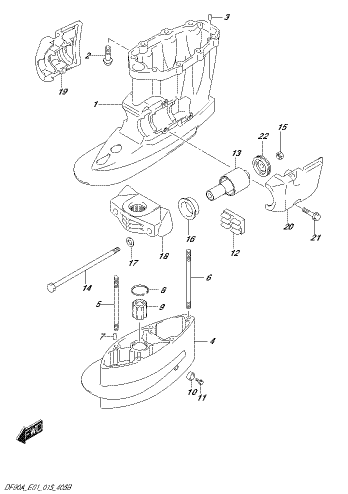

DF90A_E01_015_405B
DRIVE SHAFT HOUSING

FIG.405C

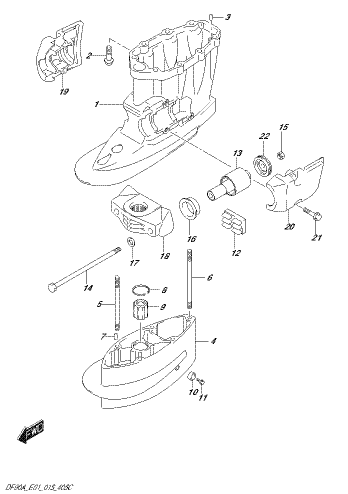

DF90A_E01_015_405C
DRIVE SHAFT HOUSING

FIG.405D

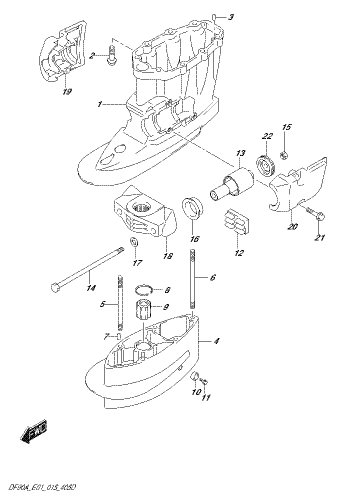

DF90A_E01_015_405D
DRIVE SHAFT HOUSING

FIG.405E

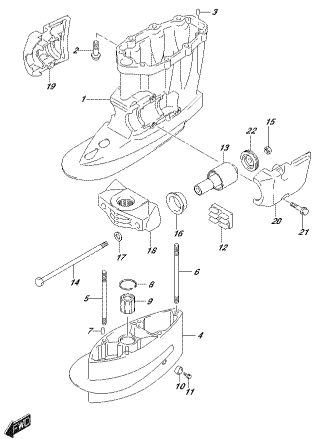

DF90A_E01_015_405E
DRIVE SHAFT HOUSING

FIG.405F

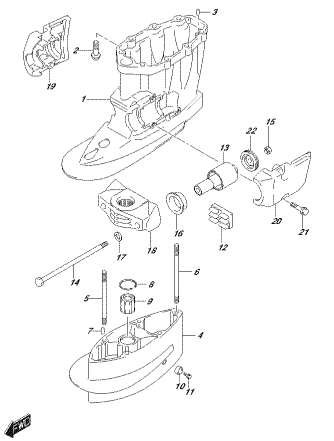

DF90A_E01_015_405F
DRIVE SHAFT HOUSING

FIG.405G

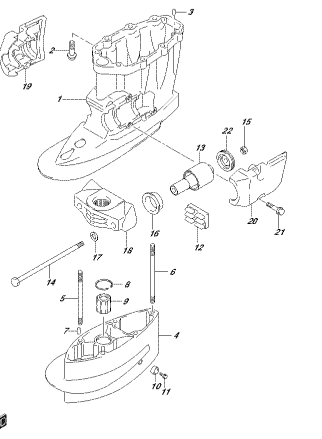

DF90A_E01_015_405G
DRIVE SHAFT HOUSING

FIG.405H

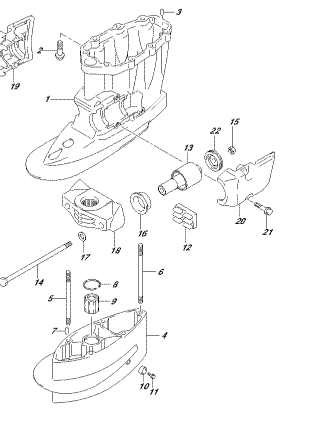

DF90A_E01_015_405H
DRIVE SHAFT HOUSING

FIG.405J

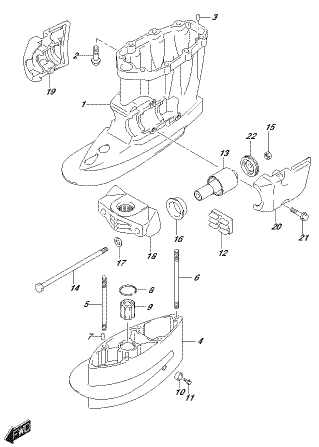

DF90A_E01_015_405J
DRIVE SHAFT HOUSING

FIG.405K

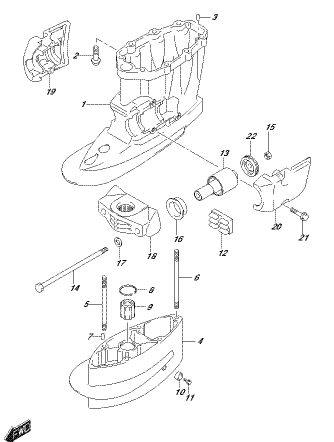

DF90A_E01_015_405K
DRIVE SHAFT HOUSING

FIG.407A

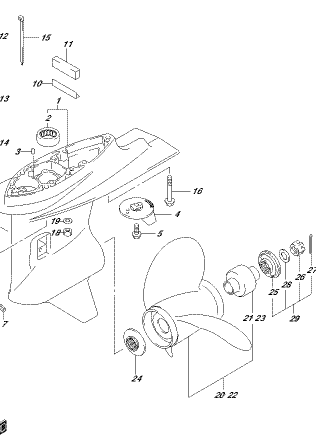

DF90A_E01_015_407A
GEAR CASE

FIG.407B

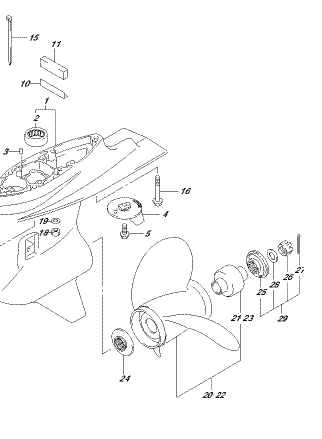

DF90A_E01_015_407B
GEAR CASE

FIG.407C

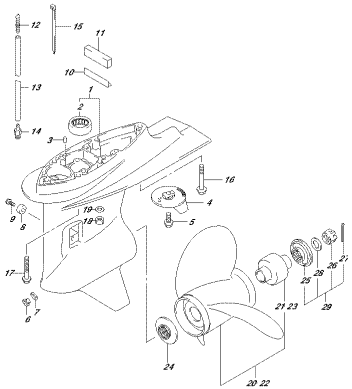

DF90A_E01_015_407C
GEAR CASE

FIG.407D

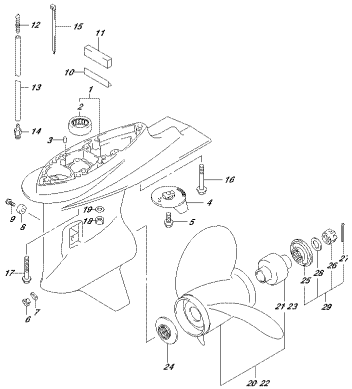

DF90A_E01_015_407D
GEAR CASE

FIG.407E

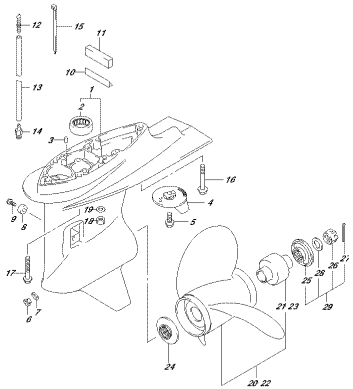

DF90A_E01_015_407E
GEAR CASE

FIG.407F

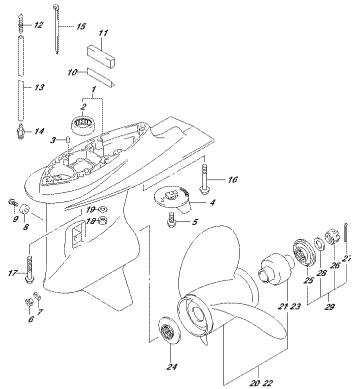

DF90A_E01_015_407F
GEAR CASE

FIG.407G

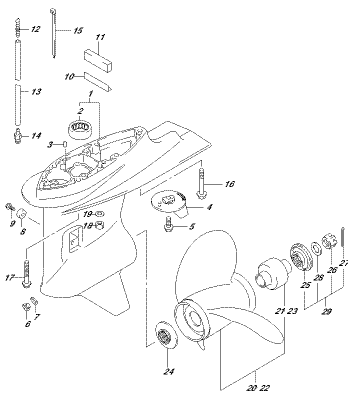

DF90A_E01_015_407G
GEAR CASE

FIG.407H

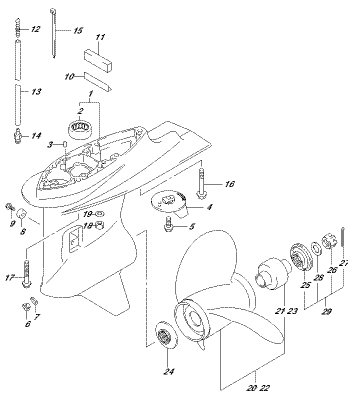

DF90A_E01_015_407H
GEAR CASE

FIG.407J

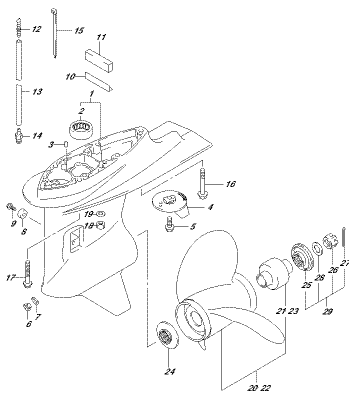

DF90A_E01_015_407J
GEAR CASE

FIG.407K

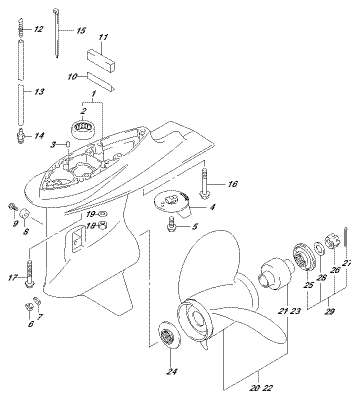

DF90A_E01_015_407K
GEAR CASE

FIG.410A

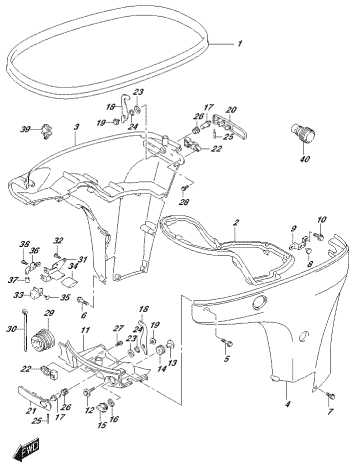

DF90A_E01_015_410A
SIDE COVER

FIG.410B

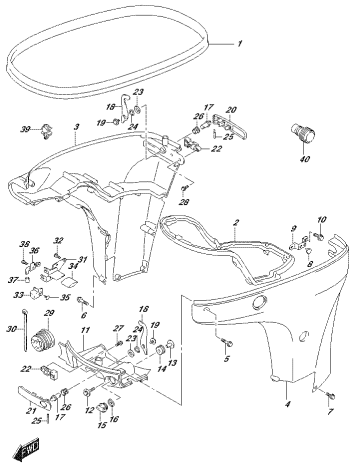

DF90A_E01_015_410B
SIDE COVER

FIG.410C

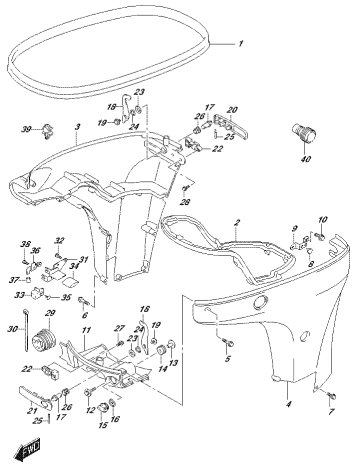

DF90A_E01_015_410C
SIDE COVER

FIG.410D

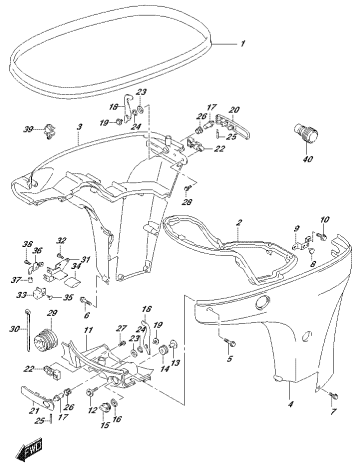

DF90A_E01_015_410D
SIDE COVER

FIG.410E

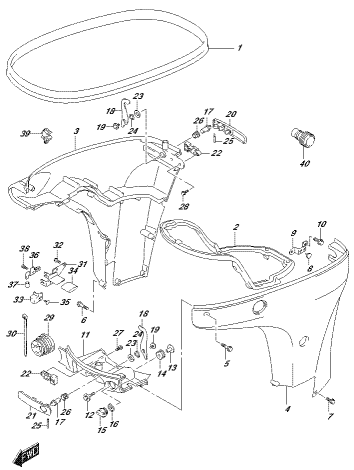

DF90A_E01_015_410E
SIDE COVER

FIG.410F

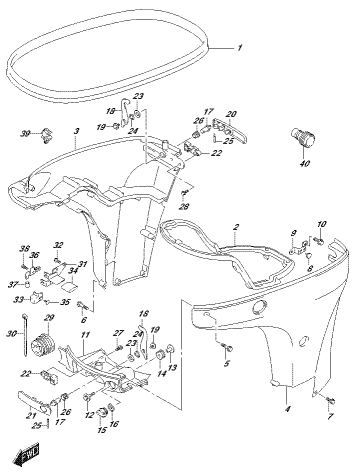

DF90A_E01_015_410F
SIDE COVER

FIG.410G

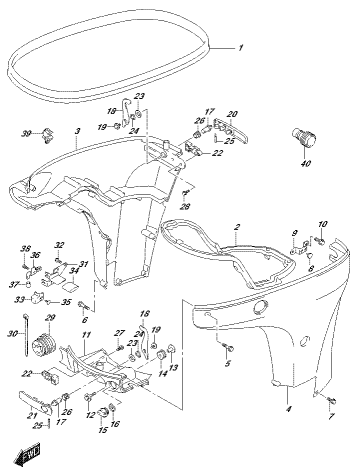

DF90A_E01_015_410G
SIDE COVER

FIG.410H

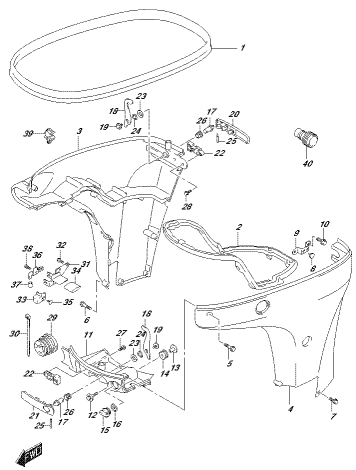

DF90A_E01_015_410H
SIDE COVER

FIG.410J

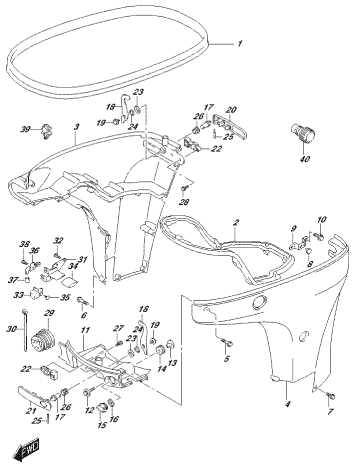

DF90A_E01_015_410J
SIDE COVER

FIG.410K

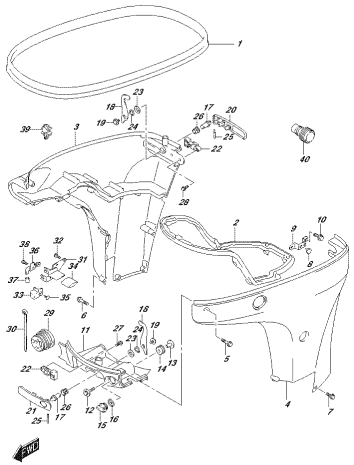

DF90A_E01_015_410K
SIDE COVER

FIG.420A

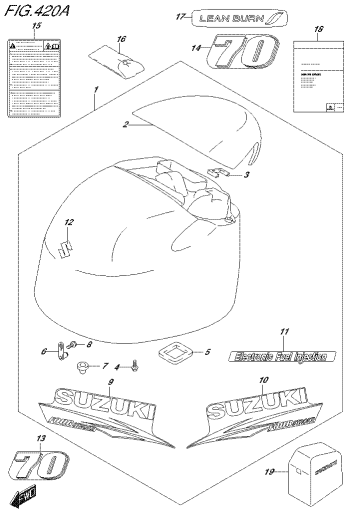

DF90A_E01_015_420A
ENGINE COVER

FIG.420B

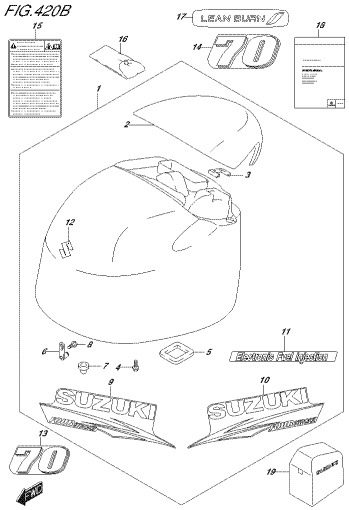

DF90A_E01_015_420B
ENGINE COVER

FIG.420C

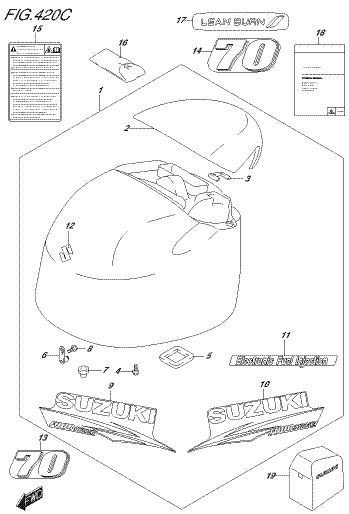

DF90A_E01_015_420C
ENGINE COVER

FIG.420D

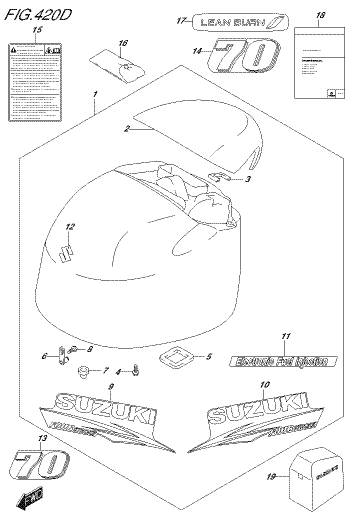

DF90A_E01_015_420D
ENGINE COVER

FIG.420E

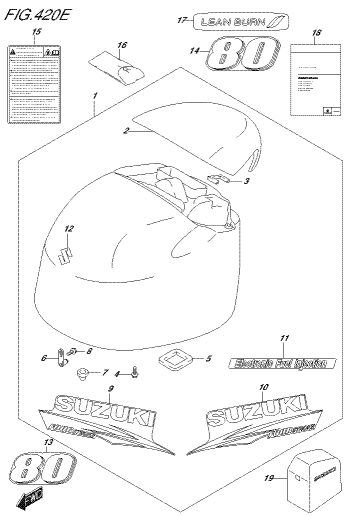

DF90A_E01_015_420E
ENGINE COVER

FIG.420F

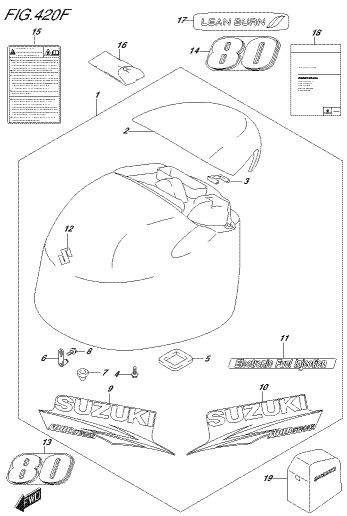

DF90A_E01_015_420F
ENGINE COVER

FIG.420G

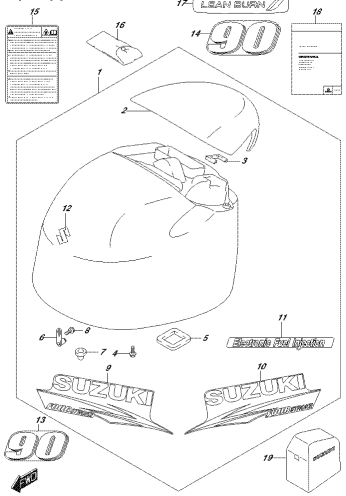

DF90A_E01_015_420G
ENGINE COVER

FIG.420H

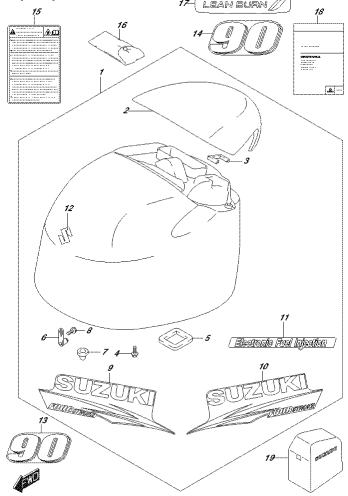

DF90A_E01_015_420H
ENGINE COVER

FIG.420J

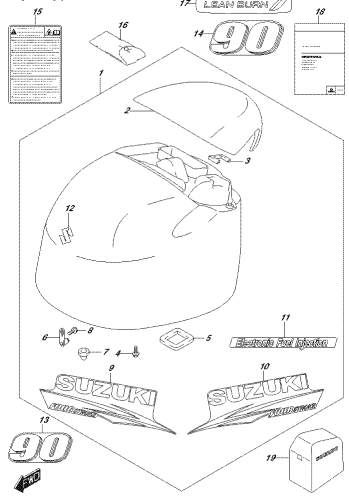

DF90A_E01_015_420J
ENGINE COVER

FIG.420K

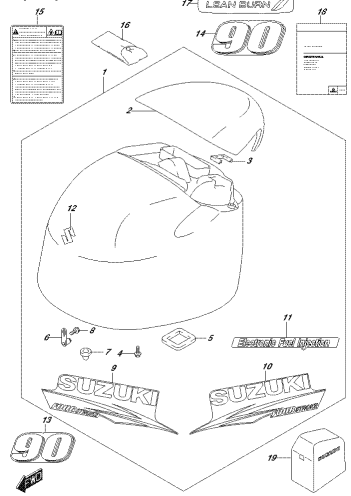

DF90A_E01_015_420K
ENGINE COVER

FIG.432A

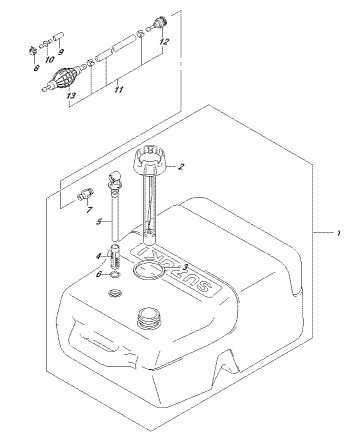

DF90A_E01_015_432A
FUEL TANK

FIG.442A

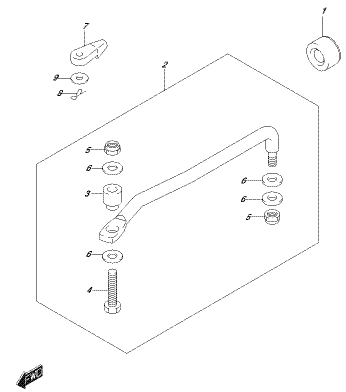

DF90A_E01_015_442A
DRAG LEVER

FIG.442B

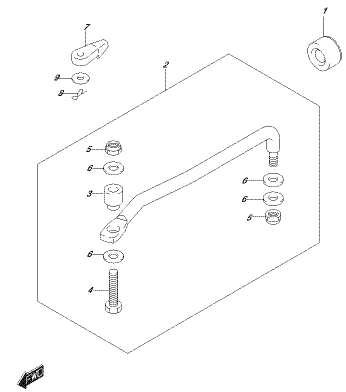

DF90A_E01_015_442B
DRAG LEVER

FIG.442C

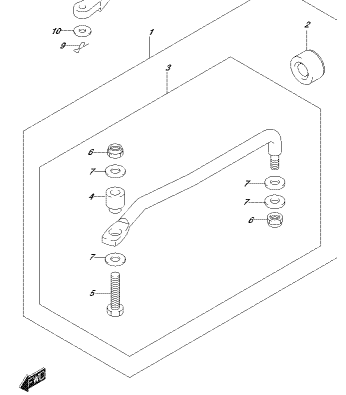

DF90A_E01_015_442C
DRAG LEVER

FIG.442D

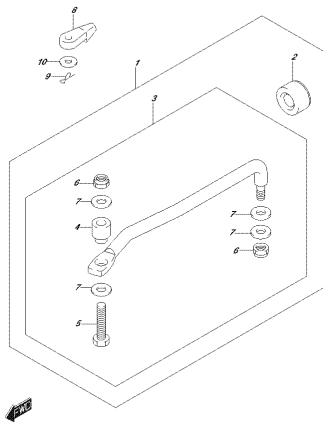

DF90A_E01_015_442D
DRAG LEVER

FIG.442E

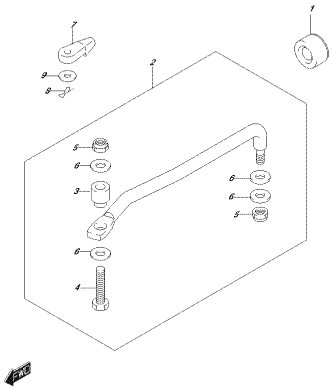

DF90A_E01_015_442E
DRAG LEVER

FIG.442F

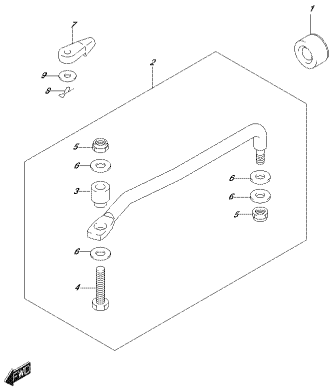

DF90A_E01_015_442F
DRAG LEVER

FIG.442G

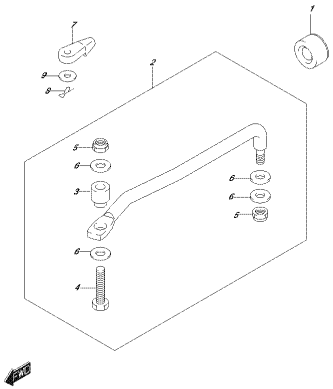

DF90A_E01_015_442G
DRAG LEVER

FIG.442H

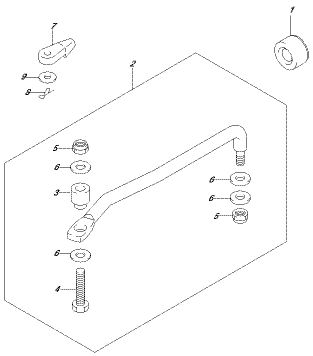

DF90A_E01_015_442H
DRAG LEVER

FIG.442J

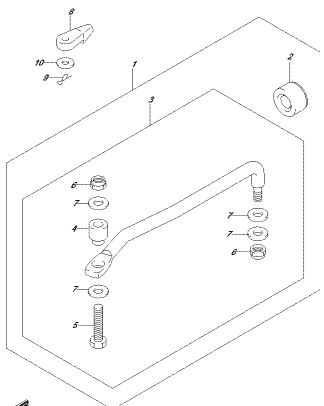

DF90A_E01_015_442J
DRAG LEVER

FIG.442K

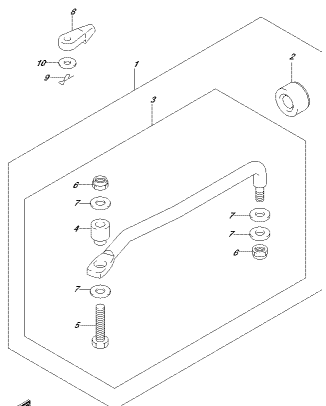

DF90A_E01_015_442K
DRAG LEVER

FIG.444A

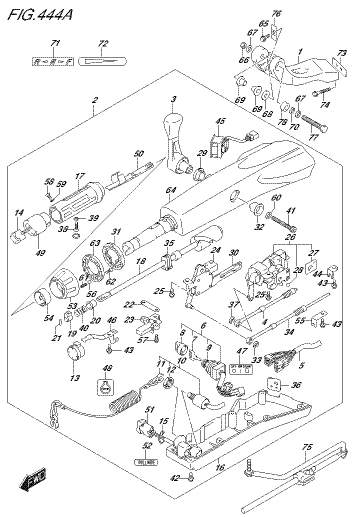

DF90A_E01_015_444A
TILLER HANDLE

FIG.444B

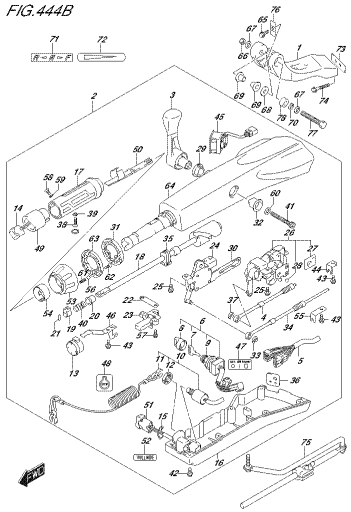

DF90A_E01_015_444B
TILLER HANDLE

FIG.444C

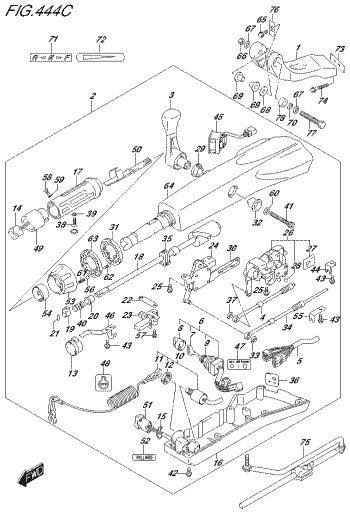

DF90A_E01_015_444C
TILLER HANDLE

FIG.444D

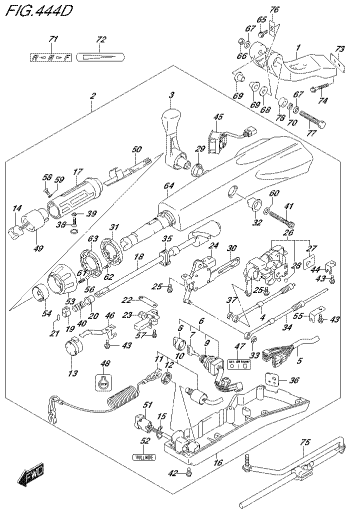

DF90A_E01_015_444D
TILLER HANDLE

FIG.460A

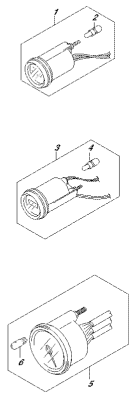

DF90A_E01_015_460A
METER

FIG.460B

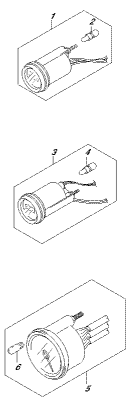

DF90A_E01_015_460B
METER

FIG.460C

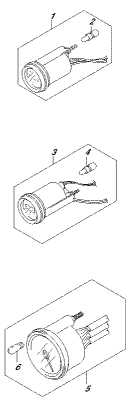

DF90A_E01_015_460C
METER

FIG.460D

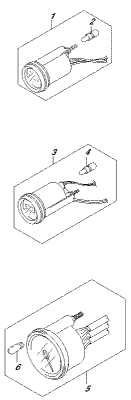

DF90A_E01_015_460D
METER

FIG.460E

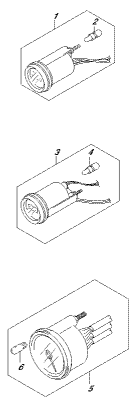

DF90A_E01_015_460E
METER

FIG.460F

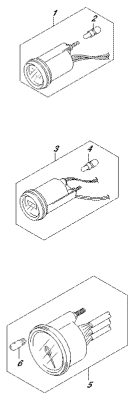

DF90A_E01_015_460F
METER

FIG.502A

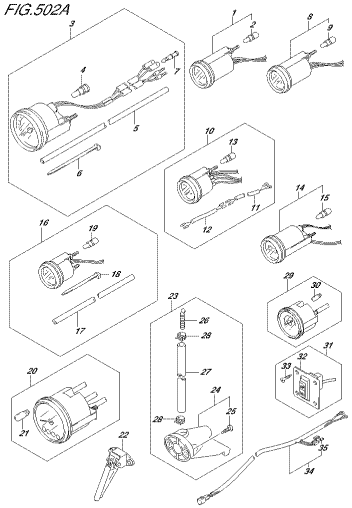

DF90A_E01_015_502A
OPT:METER (1)

FIG.502B

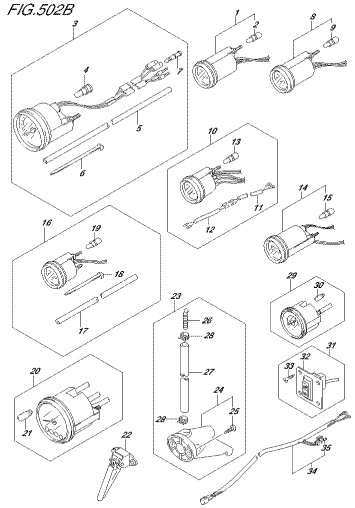

DF90A_E01_015_502B
OPT:METER (1)

FIG.502C

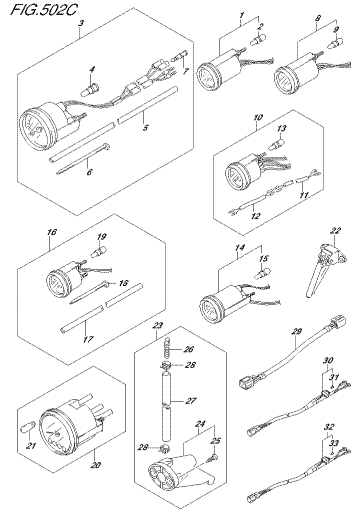

DF90A_E01_015_502C
OPT:METER (1)

FIG.502D

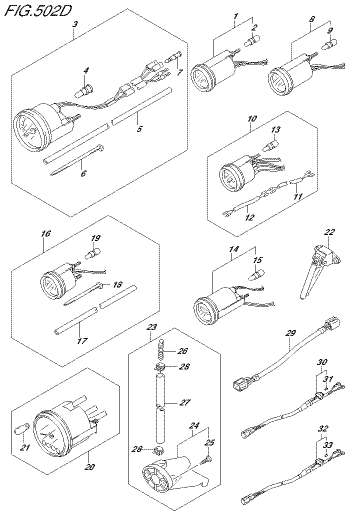

DF90A_E01_015_502D
OPT:METER (1)

FIG.502E

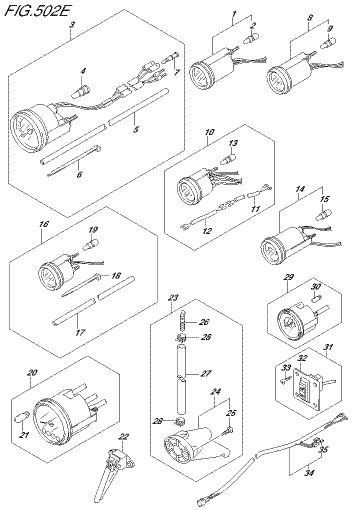

DF90A_E01_015_502E
OPT:METER (1)

FIG.502F

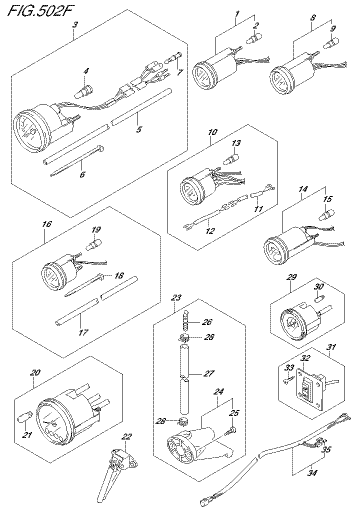

DF90A_E01_015_502F
OPT:METER (1)

FIG.502G

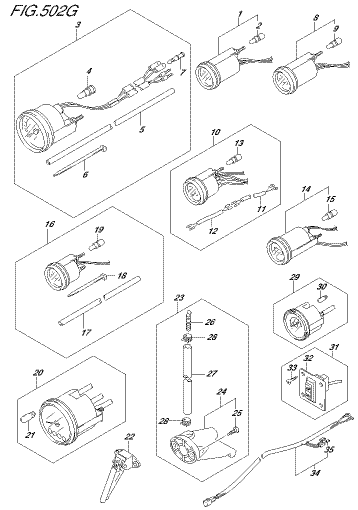

DF90A_E01_015_502G
OPT:METER (1)

FIG.502H

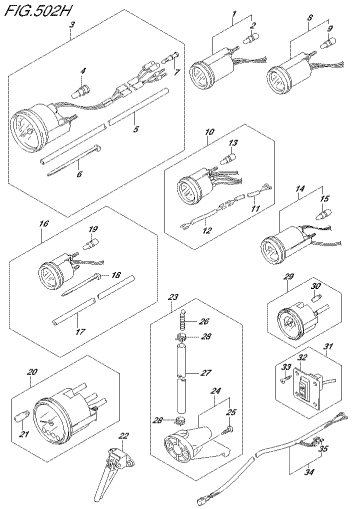

DF90A_E01_015_502H
OPT:METER (1)

FIG.502J

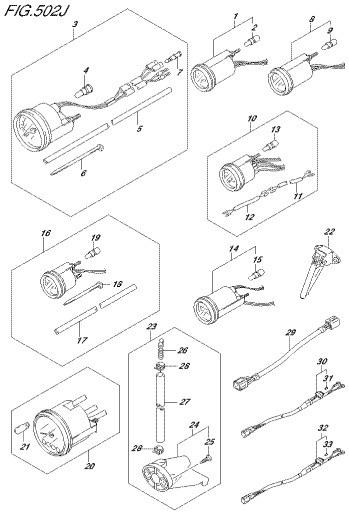

DF90A_E01_015_502J
OPT:METER (1)

FIG.502K

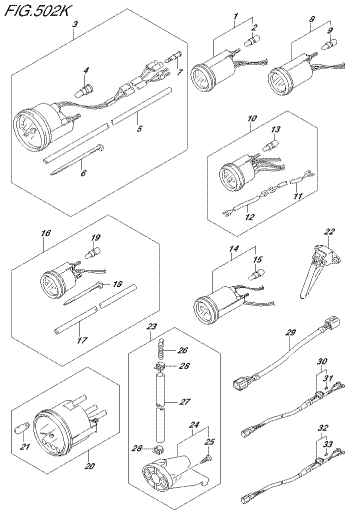

DF90A_E01_015_502K
OPT:METER (1)

FIG.503A

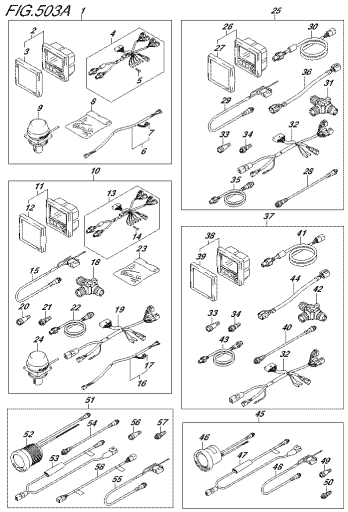

DF90A_E01_015_503A
OPT:METER (2)

FIG.507A

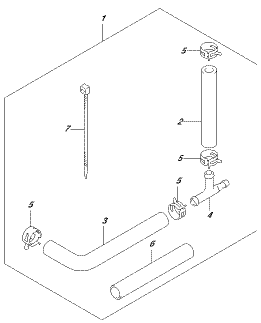

DF90A_E01_015_507A
OPT:WATER PRESSURE GAUGE SUB KIT

FIG.508A

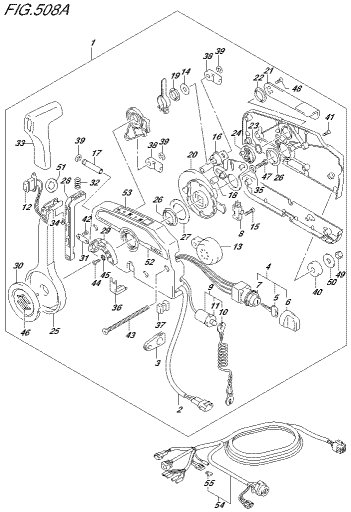

DF90A_E01_015_508A
OPT:REMOTE CONTROL

FIG.508B

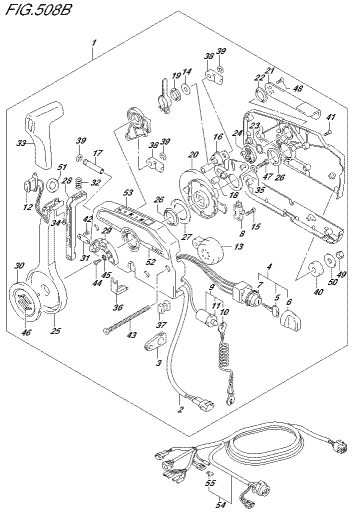

DF90A_E01_015_508B
OPT:REMOTE CONTROL

FIG.508C

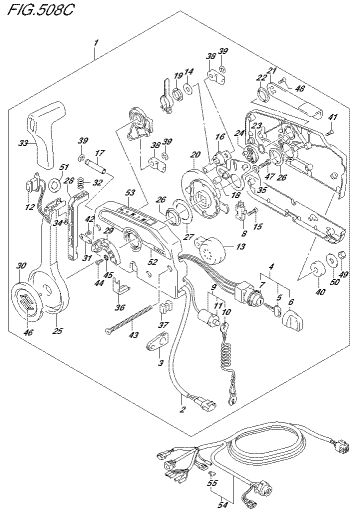

DF90A_E01_015_508C
OPT:REMOTE CONTROL

FIG.508D

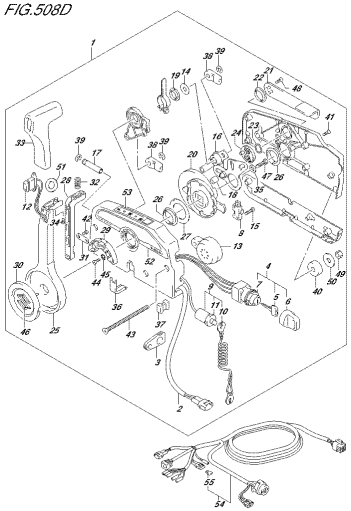

DF90A_E01_015_508D
OPT:REMOTE CONTROL

FIG.508E

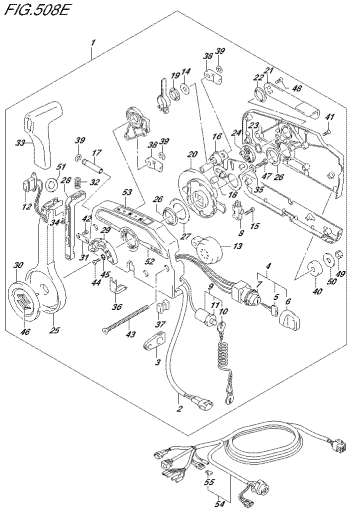

DF90A_E01_015_508E
OPT:REMOTE CONTROL

FIG.508F

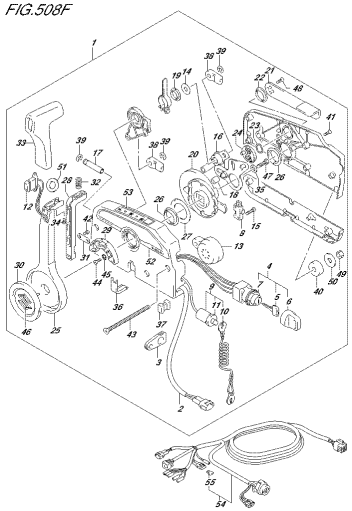

DF90A_E01_015_508F
OPT:REMOTE CONTROL

FIG.519A

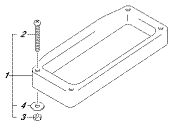

DF90A_E01_015_519A
OPT:REMOTE CONTROL SPACER

FIG.519B

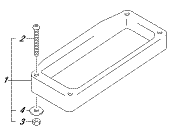

DF90A_E01_015_519B
OPT:REMOTE CONTROL SPACER

FIG.519C

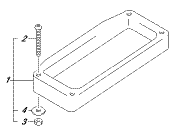

DF90A_E01_015_519C
OPT:REMOTE CONTROL SPACER

FIG.519D

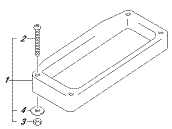

DF90A_E01_015_519D
OPT:REMOTE CONTROL SPACER

FIG.521A

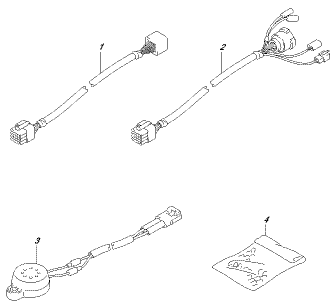

DF90A_E01_015_521A
OPT:HARNESS

FIG.521B

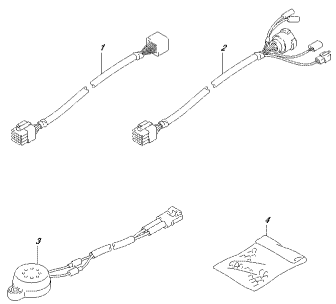

DF90A_E01_015_521B
OPT:HARNESS

FIG.521C

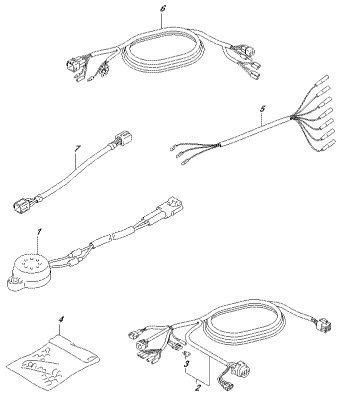

DF90A_E01_015_521C
OPT:HARNESS

FIG.521D

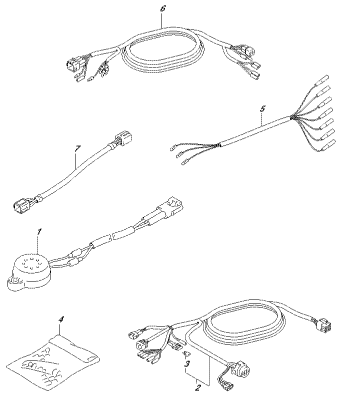

DF90A_E01_015_521D
OPT:HARNESS

FIG.521E

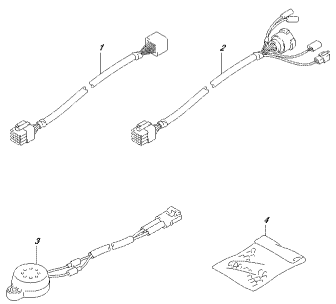

DF90A_E01_015_521E
OPT:HARNESS

FIG.521F

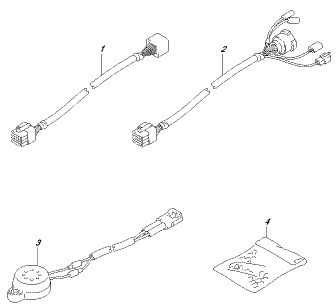

DF90A_E01_015_521F
OPT:HARNESS

FIG.521G

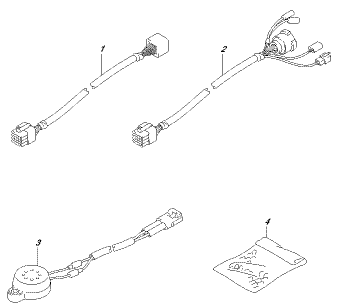

DF90A_E01_015_521G
OPT:HARNESS

FIG.521H

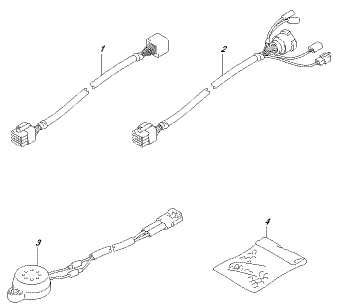

DF90A_E01_015_521H
OPT:HARNESS

FIG.521J

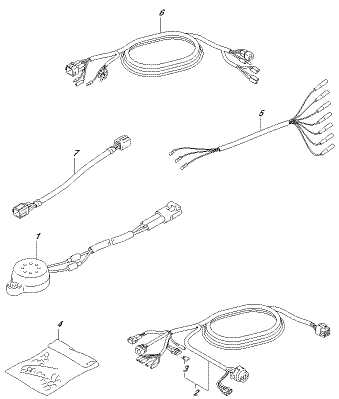

DF90A_E01_015_521J
OPT:HARNESS

FIG.521K

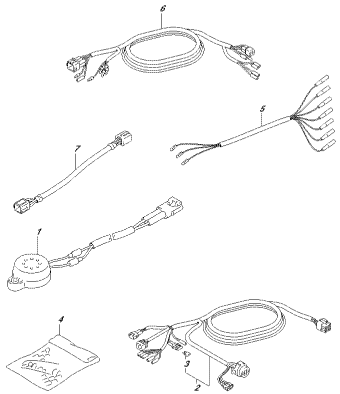

DF90A_E01_015_521K
OPT:HARNESS

FIG.530A

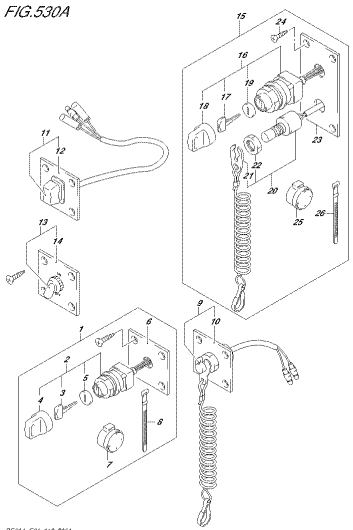

DF90A_E01_015_530A
OPT:SWITCH

FIG.530B

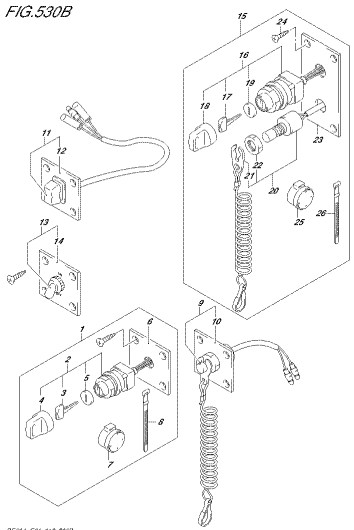

DF90A_E01_015_530B
OPT:SWITCH

FIG.530C

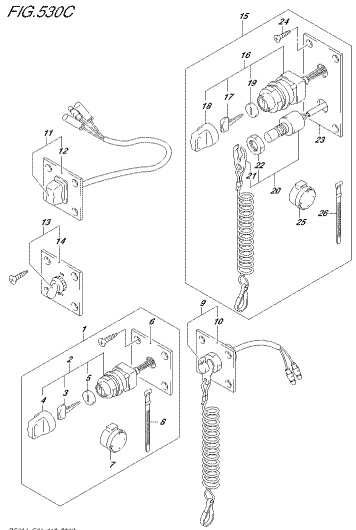

DF90A_E01_015_530C
OPT:SWITCH

FIG.530D

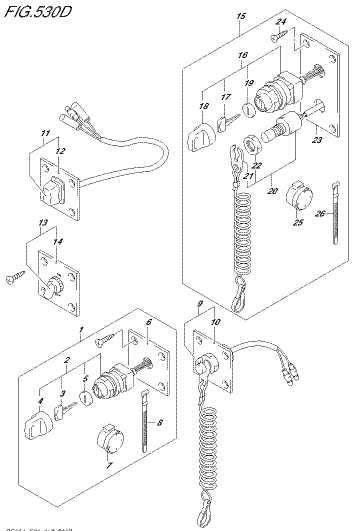

DF90A_E01_015_530D
OPT:SWITCH

FIG.530E

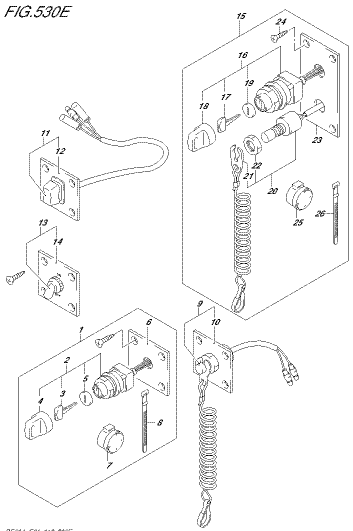

DF90A_E01_015_530E
OPT:SWITCH

FIG.530F

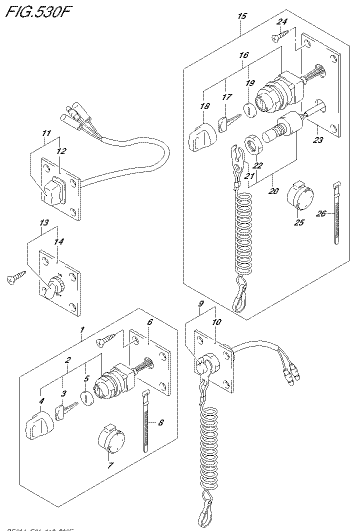

DF90A_E01_015_530F
OPT:SWITCH

FIG.544A

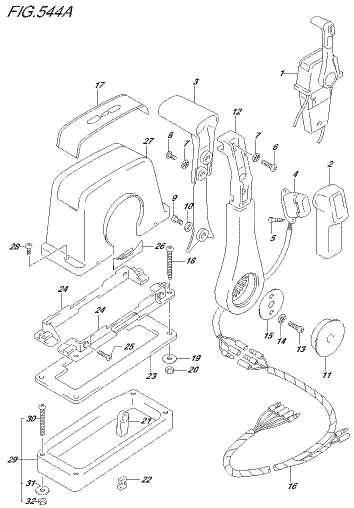

DF90A_E01_015_544A
OPT:REMOTE CONTROL ASSY SINGLE (1)

FIG.544B

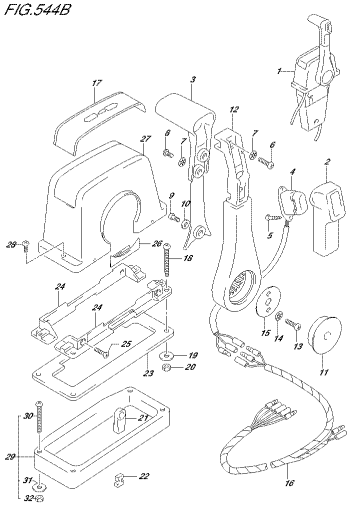

DF90A_E01_015_544B
OPT:REMOTE CONTROL ASSY SINGLE (1)

FIG.544C

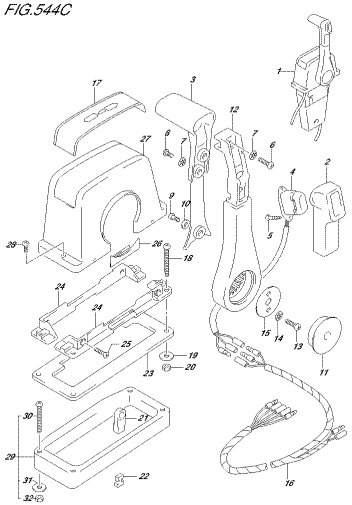

DF90A_E01_015_544C
OPT:REMOTE CONTROL ASSY SINGLE (1)

FIG.544D

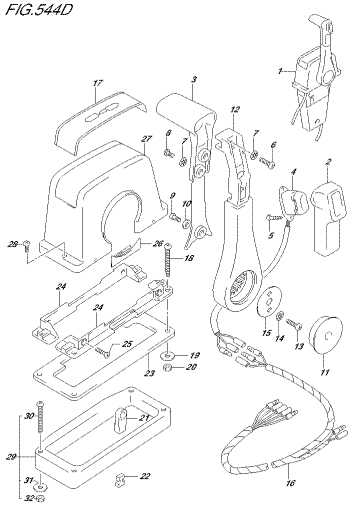

DF90A_E01_015_544D
OPT:REMOTE CONTROL ASSY SINGLE (1)

FIG.544E

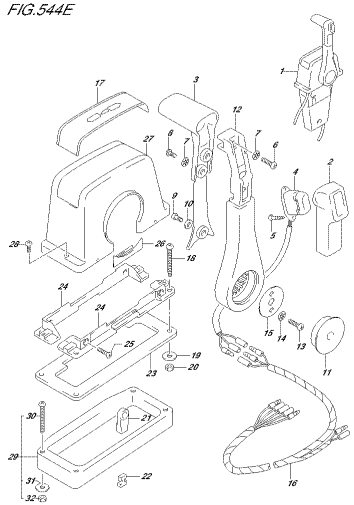

DF90A_E01_015_544E
OPT:REMOTE CONTROL ASSY SINGLE (1)

FIG.544F

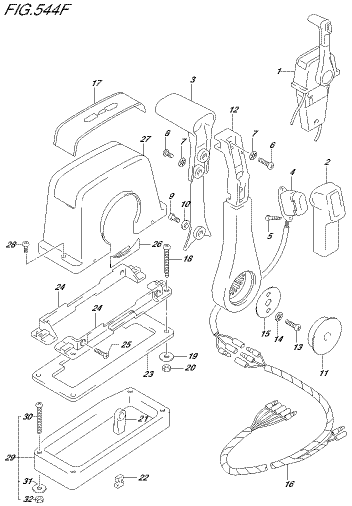

DF90A_E01_015_544F
OPT:REMOTE CONTROL ASSY SINGLE (1)

FIG.545A

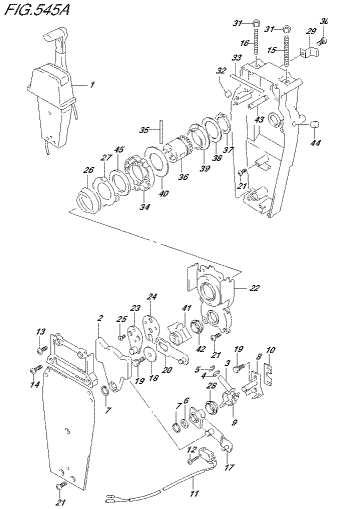

DF90A_E01_015_545A
OPT:REMOTE CONTROL ASSY SINGLE (2)

FIG.545B

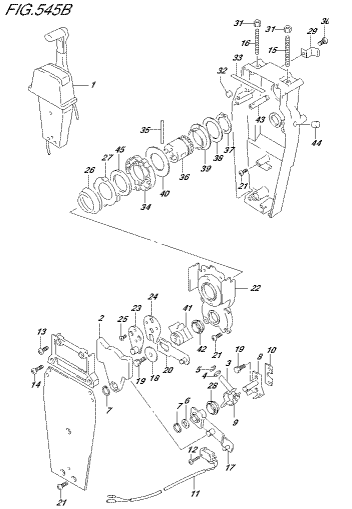

DF90A_E01_015_545B
OPT:REMOTE CONTROL ASSY SINGLE (2)

FIG.545C

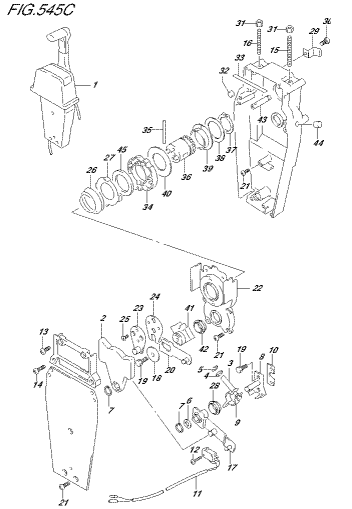

DF90A_E01_015_545C
OPT:REMOTE CONTROL ASSY SINGLE (2)

FIG.545D

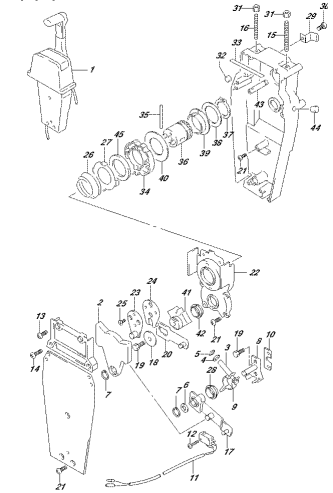

DF90A_E01_015_545D
OPT:REMOTE CONTROL ASSY SINGLE (2)

FIG.545E

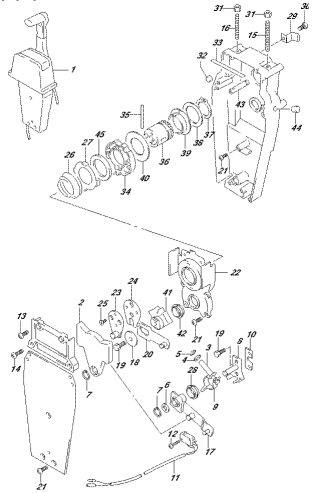

DF90A_E01_015_545E
OPT:REMOTE CONTROL ASSY SINGLE (2)

FIG.545F

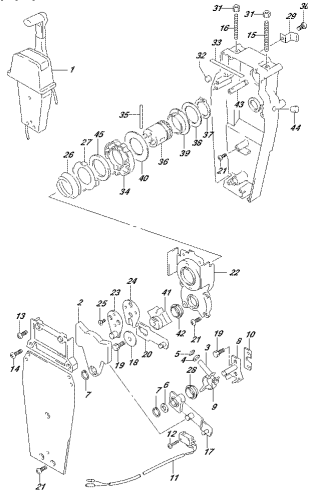

DF90A_E01_015_545F
OPT:REMOTE CONTROL ASSY SINGLE (2)

FIG.570A

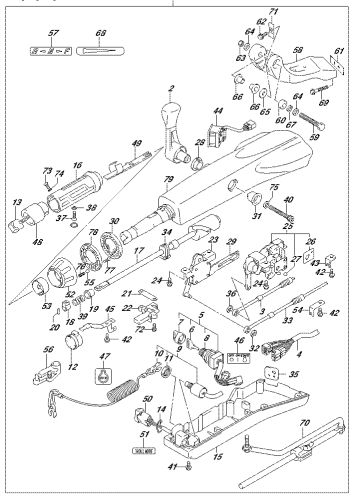

DF90A_E01_015_570A
OPT:TILLER HANDLE

FIG.570B

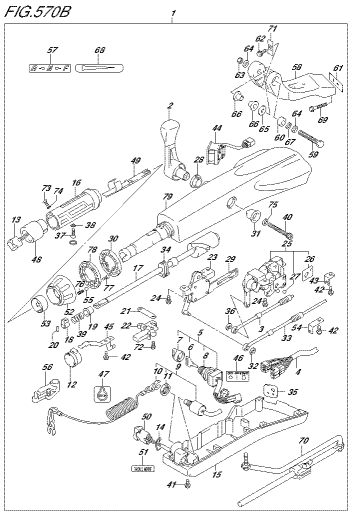

DF90A_E01_015_570B
OPT:TILLER HANDLE

FIG.570C

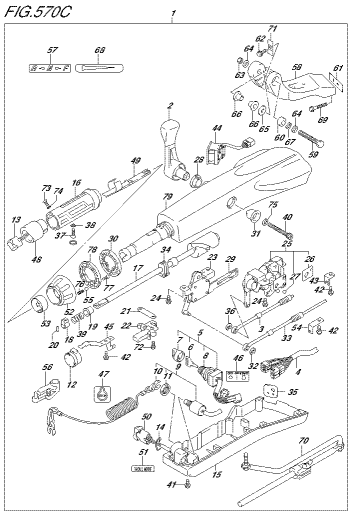

DF90A_E01_015_570C
OPT:TILLER HANDLE

FIG.570D

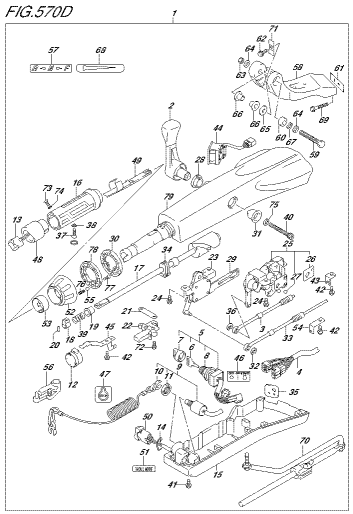

DF90A_E01_015_570D
OPT:TILLER HANDLE

FIG.570E

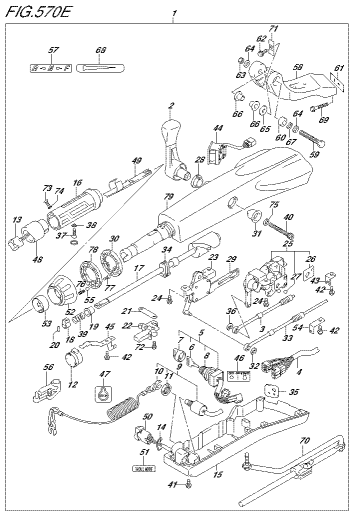

DF90A_E01_015_570E
OPT:TILLER HANDLE

FIG.570F

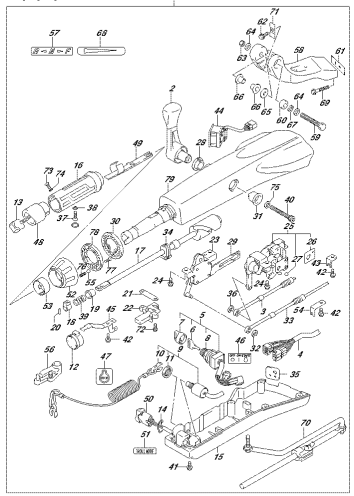

DF40A_E01_015_570F
OPT:TILLER HANDLE

FIG.585A

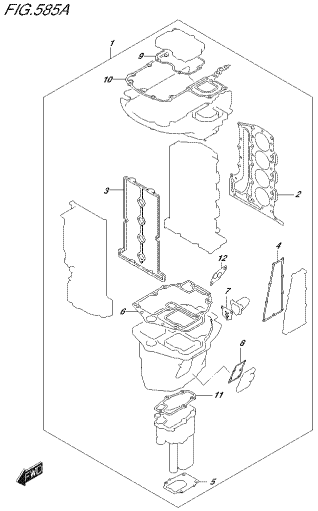

DF40A_E01_015_585A
OPT:GASKET SET

FIG.588A

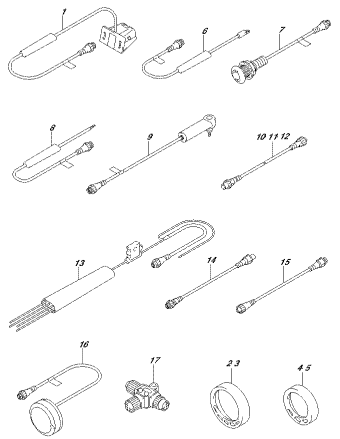

DF40A_E01_015_588A
OPT:CLEARANCE GAUGE

FIG.111A

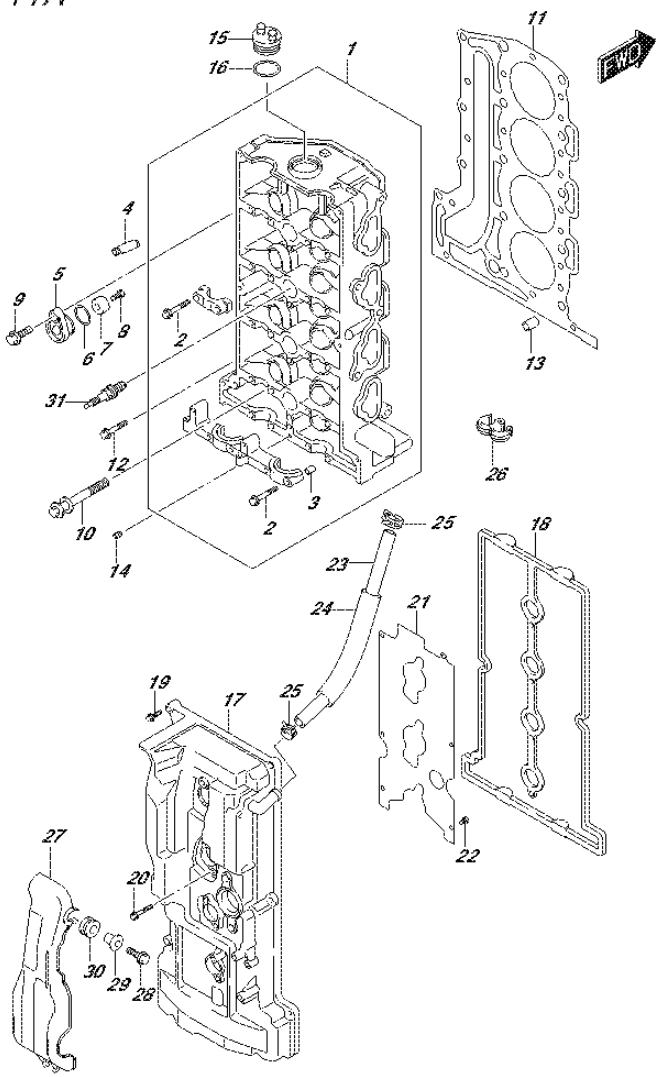

FIG.111A (1-B-2) CYLINDER HEAD

REF NO.	PART NO.	DESCRIPTION	Q'TY	REMARKS
1	11100-87L01	HEAD ASSY, CYLINDER	1	
2	09103-06266	.BOLT (6X40)	22	
3	09206-08001	.PIN (8X11)	18	
4	11115-73G01-001	GUIDE, VALVE (OS:0.5)	16	OPT
5	11261-93J00	COVER, PROTECTION ANODE	2	
6	09280-22019	O RING (D:1.9,ID:21.8)	2	
7	55321-87J00	ANODE, PROTECTION	2	
8	09103-06281	BOLT (6X14)	2	
9	01550-08207	BOLT	2	
10	11117-89J00	BOLT, CYLINDER HEAD	10	
11	11141-87L00	GASKET, CYLINDER HEAD	1	
12	01550-08407	BOLT	5	
13	04211-13189	PIN	2	
14	11112-84400	PLUG, OIL VENTURI	1	
15	11382-99E00	CAP, OIL FILLER	1	
16	09280-26006	O RING (D:3.1,ID:26.4)	1	
17	11170-87L11	COVER, CYLINDER HEAD	1	
18	11189-87L00	GASKET, CYLINDER HEAD COVER	1	
19	01547-06257	BOLT	8	
20	01547-06457	BOLT	4	
21	11173-87L00	PLATE, BREATHER	1	
22	02112-0612A	SCREW	6	
23	09355-11165-600	HOSE (11X16X600)	1	L:600->260
24	18498-95J00	PROTECTOR, BREATHER HOSE	1	
25	09401-15414	CLIP	2	
26	09408-00155	CLAMP	1	
27	11194-87L10	GUARD, FUEL HOSE	1	
28	01550-06207	BOLT	2	
29	09169-06062	WASHER	2	
30	09320-09016	CUSHION	2	
31	09482-00446	SPARK PLUG (DCPR6E)	4	NGK

FIG.113A

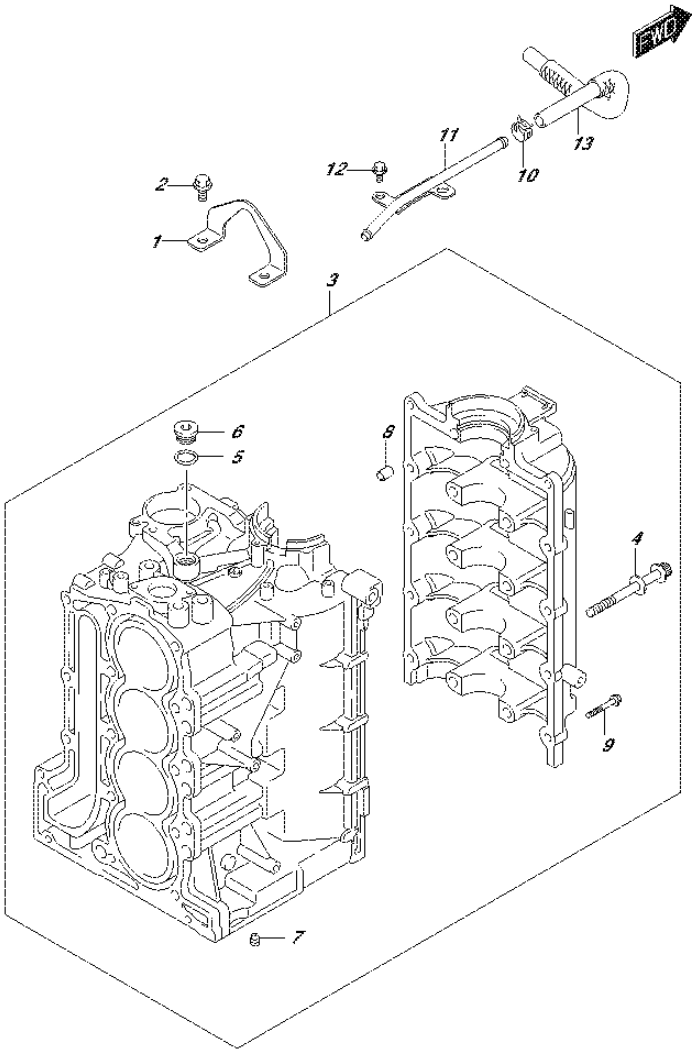

FIG.113A (1-B-3) CYLINDER BLOCK

REF NO.	PART NO.	DESCRIPTION	Q'TY	REMARKS
1	11291-87L00	HOOK, ENGINE	1	
2	01550-08207	BOLT	2	
3	11300-87L10	BLOCK ASSY, CYLINDER	1	
4	11117-90J10	.BOLT, CRANKCASE	10	
5	11216-77E00	.GASKET, OIL GALLERY PLUG	3	
6	09248-18011	.PLUG (18X8)	3	
7	11118-98J01	.PLUG, WATER	1	
8	09206-13019	.PIN (10.4X13X16)	5	
9	01550-08407	.BOLT	10	
10	09401-15414	CLIP	1	
11	11223-87L00	PIPE, BREATHER	1	
12	01550-06127	BOLT	2	
13	11224-87L00	HOSE, BREATHER NO.2	1	

FIG.116A

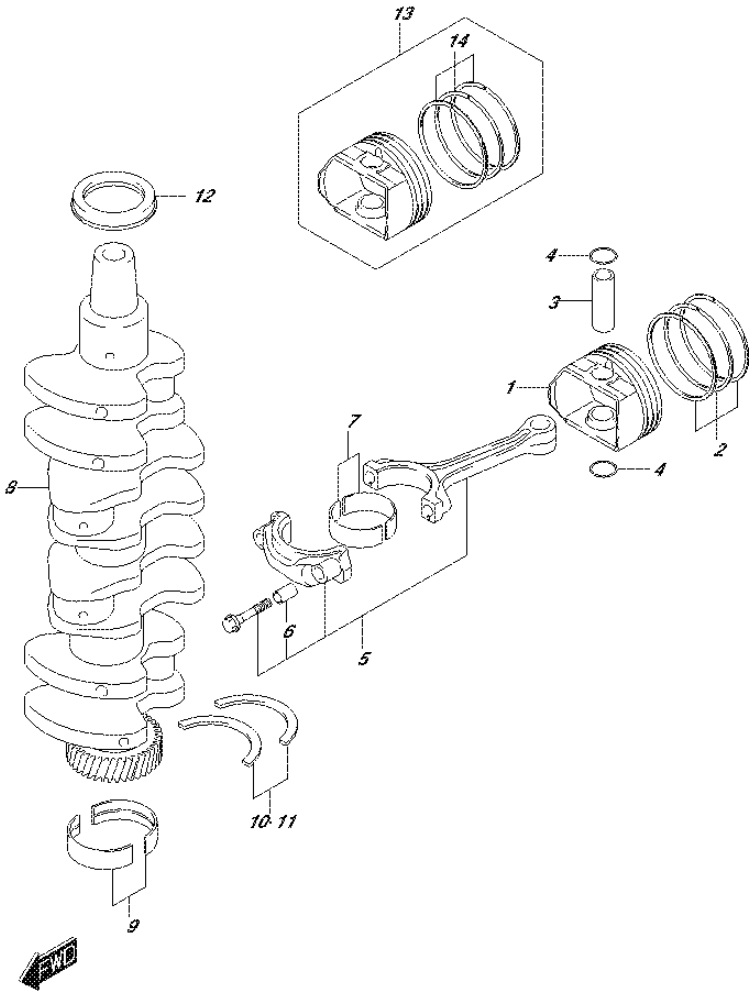

FIG.116A (1-B-4) CRANKSHAFT

REF NO.	PART NO.	DESCRIPTION	Q'TY	REMARKS
1	12111-87L00	PISTON	4	
2	12140-87L01	RING SET, PISTON	4	
3	12151-54A50	PIN, PISTON	4	
4	09381-18002	SNAP RING	8	
5	12160-87L10	CONNROD ASSY	4	
6	04221-04089	.PIN	8	
7-1	12100-69830-0A0	BEARING SET, CONNROD	4	GREEN
7-2	12100-69830-0B0	BEARING SET, CONNROD	4	BLACK
7-3	12100-69830-0C0	BEARING SET, CONNROD	4	NON
7-4	12100-69830-0D0	BEARING SET, CONNROD	4	YELLOW
7-5	12100-69830-0E0	BEARING SET, CONNROD	4	BLUE
7-6	12100-69830-025	BEARING SET, CONNROD (US:0.25)	4	OPT
8	12220-87L00	CRANKSHAFT	1	
9-1	12340-57K02-0C0	BEARING SET, CRANKSHAFT	5	GREEN
9-2	12340-57K02-0D0	BEARING SET, CRANKSHAFT	5	BLACK
9-3	12340-57K02-0E0	BEARING SET, CRANKSHAFT	5	NON
9-4	12340-57K02-0A0	BEARING SET, CRANKSHAFT	5	PURPLE
9-5	12340-57K02-0B0	BEARING SET, CRANKSHAFT	5	BROWN
9-6	12300-57820-0AA	BEARING SET, CRANKSHAFT (RED/PURPLE) (US:0.25)	5	OPT
9-7	12300-57820-0BA	BEARING SET, CRANKSHAFT (RED/BROWN) (US:0.25)	5	OPT
9-8	12300-57820-0CA	BEARING SET, CRANKSHAFT (RED/GREEN) (US:0.25)	5	OPT
9-9	12300-57820-0DA	BEARING SET, CRANKSHAFT (RED/BLACK) (US:0.25)	5	OPT
9-10	12300-57820-0EA	BEARING SET, CRANKSHAFT (RED) (US:0.25)	5	OPT
10	12300-78890	BEARING SET, CRANK THRUST	1	
11	12300-78890-012	BEARING SET, CRANK THRUST (OS:0.125)	1	OPT
12	09283-52004	OIL SEAL (52X70X10)	1	
13	12100-87L01-050	PISTON SET (OS:0.50)	4	OPT
14	12140-87L01-050	.RING SET, PISTON (OS:0.50)	4	OPT

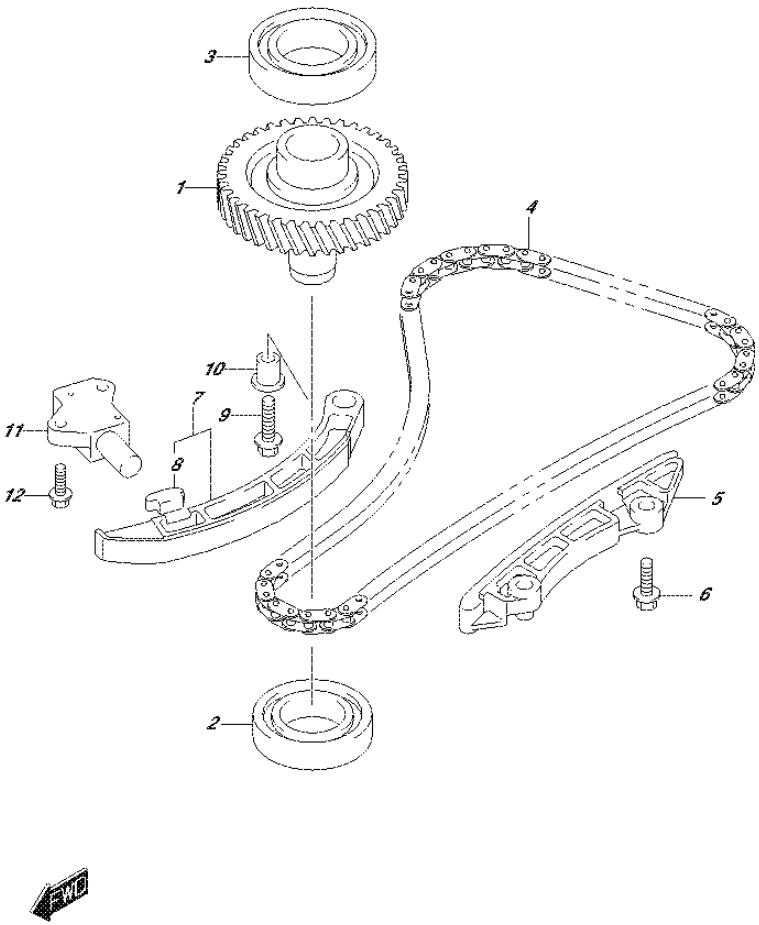

FIG.119A (1-B-5) TIMING CHAIN

REF NO.	PART NO.	DESCRIPTION	Q'TY	REMARKS
1	12730-87L00	GEAR, DRIVEN (NT:36)	1	
2	09262-32008	BEARING (32X58X13)	1	
3	09262-35070	BEARING (35X62X14)	1	
4	12761-87L00	CHAIN, TIMING	1	
5	12771-87L00	GUIDE, TIMING CHAIN	1	
6	01550-0825A	BOLT	2	
7	12810-87L00	TENSIONER ASSY, TIMING CHAIN	1	
8	12813-73G00	.PAD, TIMING CHAIN TENSIONER	1	
9	01550-0835A	BOLT	1	
10	12812-90J00	SPACER, TIMING CHAIN TENSIONER	1	
11	12831-93J01	ADJUSTER ASSY, TENSIONER	1	
12	01550-0620A	BOLT	2	

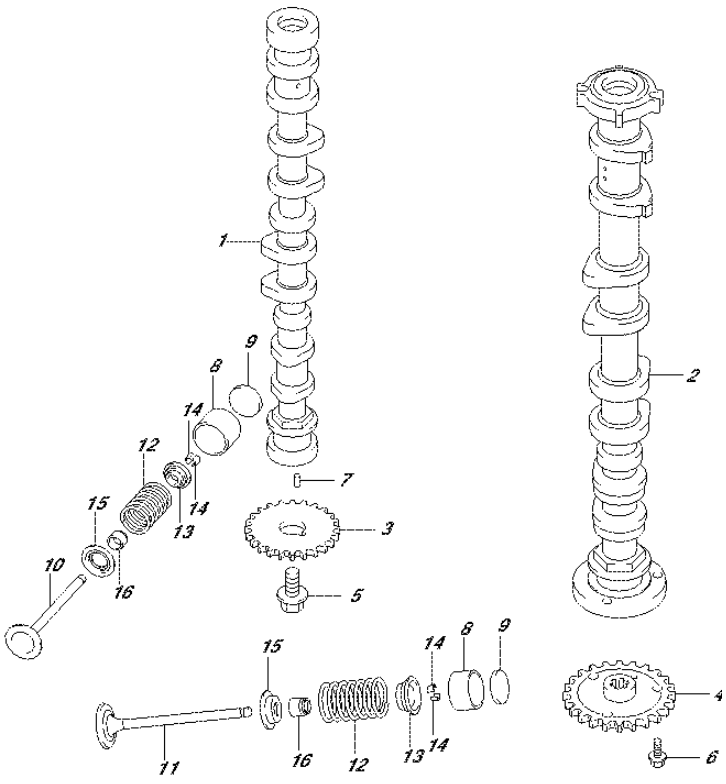

FIG.121A (1-B-6) CAMSHAFT (DF70A E01)

REF NO.	PART NO.	DESCRIPTION	Q'TY	REMARKS
1	12701-87L20	CAMSHAFT, INTAKE	1	
2	12705-87L00	CAMSHAFT, EXHAUST	1	
3	12741-90J01	SPROCKET, CAMSHAFT TIMING (NT:29)	1	
4	12748-87L00	SPROCKET, EXH CAMSHAFT (NT:29)	1	
5	12749-93J00	BOLT, CAMSHAFT	1	
6	01550-0612A	BOLT	3	
7	04221-05109	PIN	2	
8	12891-69J00	TAPPET	16	
9-1	12892-69J00-228	SHIM, TAPPET (T:2.28)	16	
9-2	12892-69J00-230	SHIM, TAPPET (T:2.30)	16	
9-3	12892-69J00-232	SHIM, TAPPET (T:2.32)	16	
9-4	12892-69J00-234	SHIM, TAPPET (T:2.34)	16	
9-5	12892-69J00-236	SHIM, TAPPET (T:2.36)	16	
9-6	12892-69J00-238	SHIM, TAPPET (T:2.38)	16	
9-7	12892-69J00-240	SHIM, TAPPET (T:2.40)	16	
9-8	12892-69J00-242	SHIM, TAPPET (T:2.42)	16	
9-9	12892-69J00-244	SHIM, TAPPET (T:2.44)	16	
9-10	12892-69J00-246	SHIM, TAPPET (T:2.46)	16	
9-11	12892-69J00-248	SHIM, TAPPET (T:2.48)	16	
9-12	12892-69J00-250	SHIM, TAPPET (T:2.50)	16	
9-13	12892-69J00-252	SHIM, TAPPET (T:2.52)	16	
9-14	12892-69J00-254	SHIM, TAPPET (T:2.54)	16	
9-15	12892-69J00-256	SHIM, TAPPET (T:2.56)	16	
9-16	12892-69J00-258	SHIM, TAPPET (T:2.58)	16	
9-17	12892-69J00-260	SHIM, TAPPET (T:2.60)	16	
9-18	12892-69J00-262	SHIM, TAPPET (T:2.62)	16	
9-19	12892-69J00-264	SHIM, TAPPET (T:2.64)	16	
9-20	12892-69J00-266	SHIM, TAPPET (T:2.66)	16	
9-21	12892-69J00-268	SHIM, TAPPET (T:2.68)	16	
9-22	12892-69J00-270	SHIM, TAPPET (T:2.70)	16	
9-23	12892-69J00-272	SHIM, TAPPET (T:2.72)	16	

FIG.121A

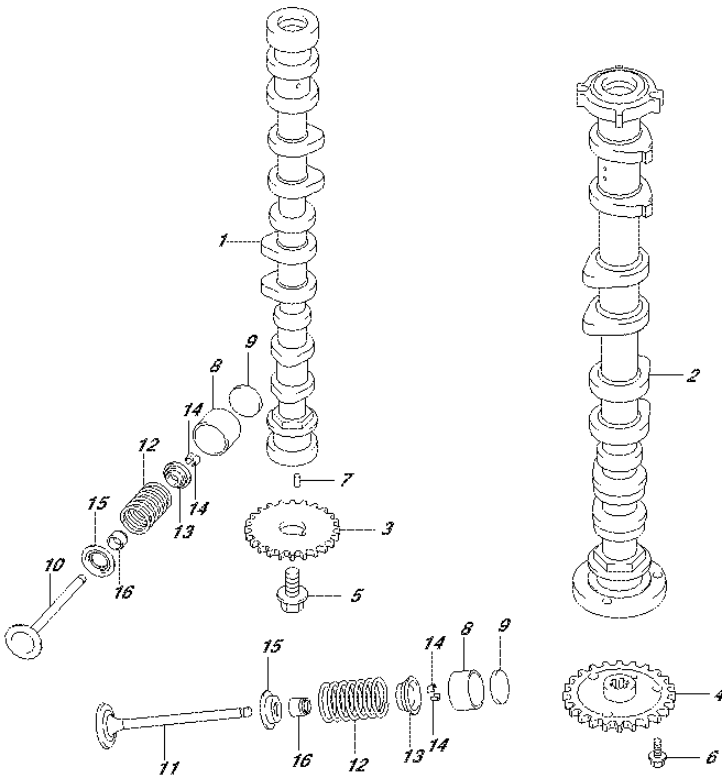

FIG.121A (1-B-7) CAMSHAFT (DF70A E01)

REF NO.	PART NO.	DESCRIPTION	Q'TY	REMARKS
10	12911-87L00	VALVE, INTAKE	8	
11	12915-87L50	VALVE, EXHAUST	8	
12	12921-87J10	SPRING, VALVE	16	
13	12931-78G00	RETAINER, VALVE SPRING	16	
14	12932-24400	COTTER, VALVE	32	
15	12933-51E00	SEAT, VALVE SPRING	16	
16	09289-05012	OIL SEAL (5.5X11.5X9.3)	16	

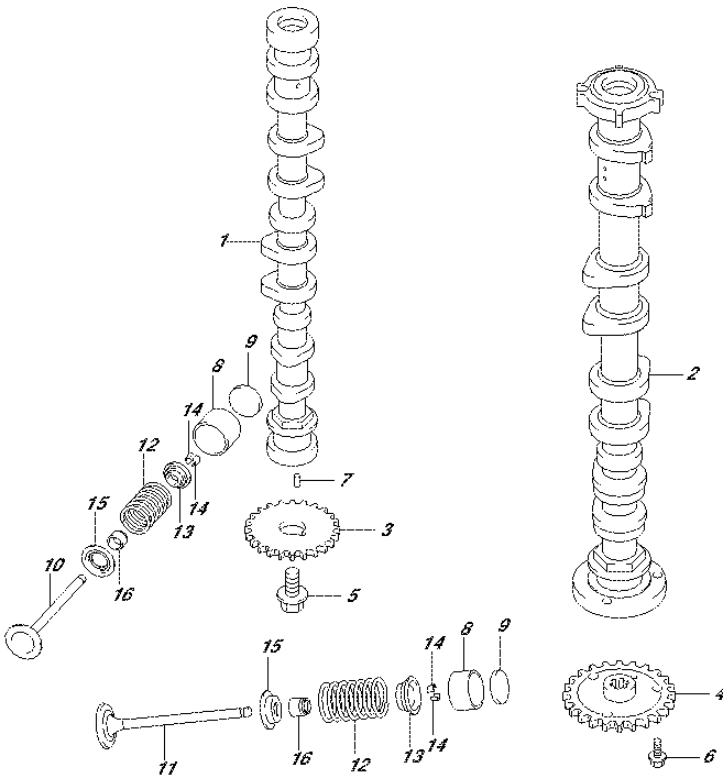

FIG.121B (1-B-8) CAMSHAFT (DF70A E40)

REF NO.	PART NO.	DESCRIPTION	Q'TY	REMARKS
1	12701-87L20	CAMSHAFT, INTAKE	1	
2	12705-87L00	CAMSHAFT, EXHAUST	1	
3	12741-90J01	SPROCKET, CAMSHAFT TIMING (NT:29)	1	
4	12748-87L00	SPROCKET, EXH CAMSHAFT (NT:29)	1	
5	12749-93J00	BOLT, CAMSHAFT	1	
6	01550-0612A	BOLT	3	
7	04221-05109	PIN	2	
8	12891-69J00	TAPPET	16	
9-1	12892-69J00-228	SHIM, TAPPET (T:2.28)	16	
9-2	12892-69J00-230	SHIM, TAPPET (T:2.30)	16	
9-3	12892-69J00-232	SHIM, TAPPET (T:2.32)	16	
9-4	12892-69J00-234	SHIM, TAPPET (T:2.34)	16	
9-5	12892-69J00-236	SHIM, TAPPET (T:2.36)	16	
9-6	12892-69J00-238	SHIM, TAPPET (T:2.38)	16	
9-7	12892-69J00-240	SHIM, TAPPET (T:2.40)	16	
9-8	12892-69J00-242	SHIM, TAPPET (T:2.42)	16	
9-9	12892-69J00-244	SHIM, TAPPET (T:2.44)	16	
9-10	12892-69J00-246	SHIM, TAPPET (T:2.46)	16	
9-11	12892-69J00-248	SHIM, TAPPET (T:2.48)	16	
9-12	12892-69J00-250	SHIM, TAPPET (T:2.50)	16	
9-13	12892-69J00-252	SHIM, TAPPET (T:2.52)	16	
9-14	12892-69J00-254	SHIM, TAPPET (T:2.54)	16	
9-15	12892-69J00-256	SHIM, TAPPET (T:2.56)	16	
9-16	12892-69J00-258	SHIM, TAPPET (T:2.58)	16	
9-17	12892-69J00-260	SHIM, TAPPET (T:2.60)	16	
9-18	12892-69J00-262	SHIM, TAPPET (T:2.62)	16	
9-19	12892-69J00-264	SHIM, TAPPET (T:2.64)	16	
9-20	12892-69J00-266	SHIM, TAPPET (T:2.66)	16	
9-21	12892-69J00-268	SHIM, TAPPET (T:2.68)	16	
9-22	12892-69J00-270	SHIM, TAPPET (T:2.70)	16	
9-23	12892-69J00-272	SHIM, TAPPET (T:2.72)	16	

FIG.121B

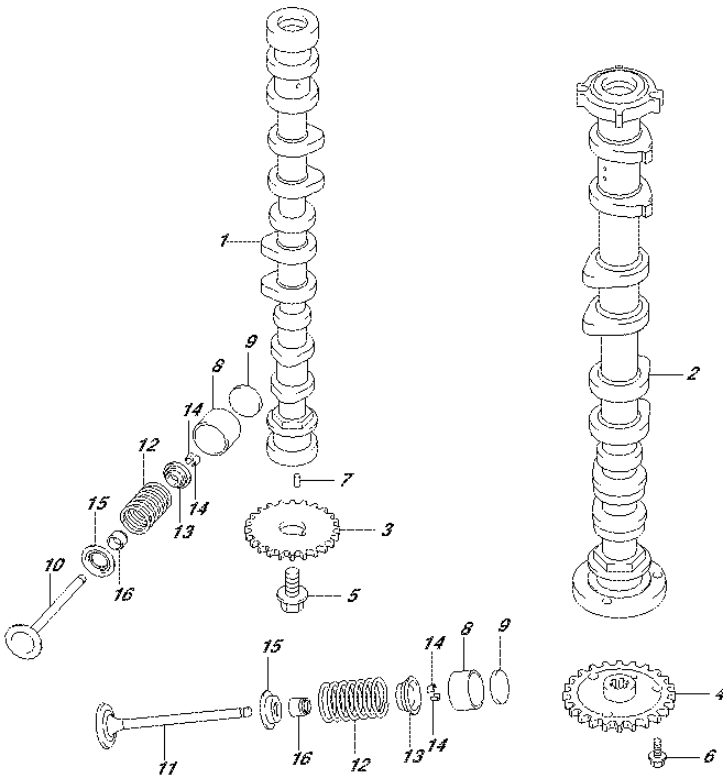

FIG.121B (1-B-9) CAMSHAFT (DF70A E40)

REF NO.	PART NO.	DESCRIPTION	Q'TY	REMARKS
10	12911-87L00	VALVE, INTAKE	8	
11	12915-87L50	VALVE, EXHAUST	8	
12	12921-87J10	SPRING, VALVE	16	
13	12931-78G00	RETAINER, VALVE SPRING	16	
14	12932-24400	COTTER, VALVE	32	
15	12933-51E00	SEAT, VALVE SPRING	16	
16	09289-05012	OIL SEAL (5.5X11.5X9.3)	16	

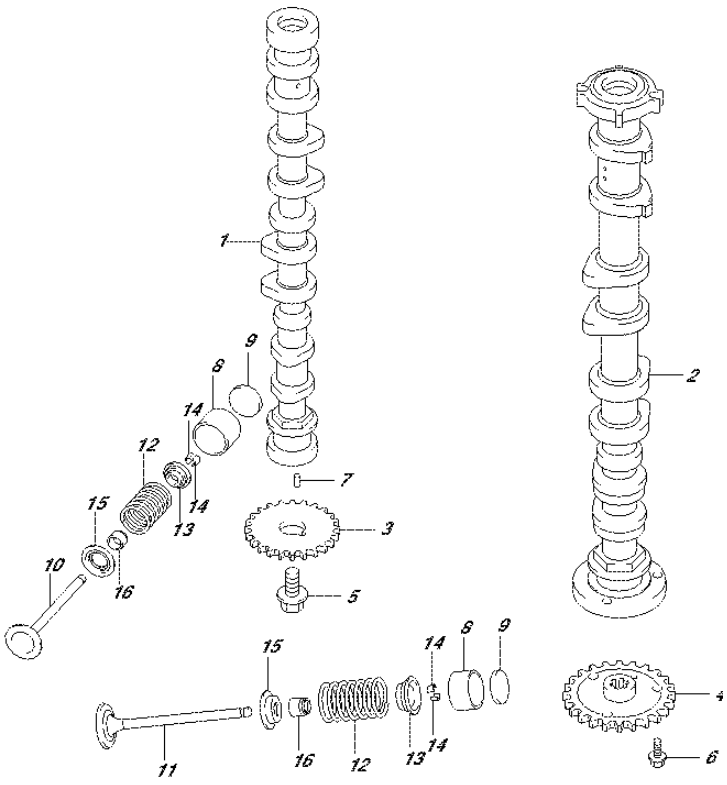

FIG.121C (1-B-10) CAMSHAFT (DF70ATH E01)

REF NO.	PART NO.	DESCRIPTION	Q'TY	REMARKS
1	12701-87L20	CAMSHAFT, INTAKE	1	
2	12705-87L00	CAMSHAFT, EXHAUST	1	
3	12741-90J01	SPROCKET, CAMSHAFT TIMING (NT:29)	1	
4	12748-87L00	SPROCKET, EXH CAMSHAFT (NT:29)	1	
5	12749-93J00	BOLT, CAMSHAFT	1	
6	01550-0612A	BOLT	3	
7	04221-05109	PIN	2	
8	12891-69J00	TAPPET	16	
9-1	12892-69J00-228	SHIM, TAPPET (T:2.28)	16	
9-2	12892-69J00-230	SHIM, TAPPET (T:2.30)	16	
9-3	12892-69J00-232	SHIM, TAPPET (T:2.32)	16	
9-4	12892-69J00-234	SHIM, TAPPET (T:2.34)	16	
9-5	12892-69J00-236	SHIM, TAPPET (T:2.36)	16	
9-6	12892-69J00-238	SHIM, TAPPET (T:2.38)	16	
9-7	12892-69J00-240	SHIM, TAPPET (T:2.40)	16	
9-8	12892-69J00-242	SHIM, TAPPET (T:2.42)	16	
9-9	12892-69J00-244	SHIM, TAPPET (T:2.44)	16	
9-10	12892-69J00-246	SHIM, TAPPET (T:2.46)	16	
9-11	12892-69J00-248	SHIM, TAPPET (T:2.48)	16	
9-12	12892-69J00-250	SHIM, TAPPET (T:2.50)	16	
9-13	12892-69J00-252	SHIM, TAPPET (T:2.52)	16	
9-14	12892-69J00-254	SHIM, TAPPET (T:2.54)	16	
9-15	12892-69J00-256	SHIM, TAPPET (T:2.56)	16	
9-16	12892-69J00-258	SHIM, TAPPET (T:2.58)	16	
9-17	12892-69J00-260	SHIM, TAPPET (T:2.60)	16	
9-18	12892-69J00-262	SHIM, TAPPET (T:2.62)	16	
9-19	12892-69J00-264	SHIM, TAPPET (T:2.64)	16	
9-20	12892-69J00-266	SHIM, TAPPET (T:2.66)	16	
9-21	12892-69J00-268	SHIM, TAPPET (T:2.68)	16	
9-22	12892-69J00-270	SHIM, TAPPET (T:2.70)	16	
9-23	12892-69J00-272	SHIM, TAPPET (T:2.72)	16	

FIG.121C

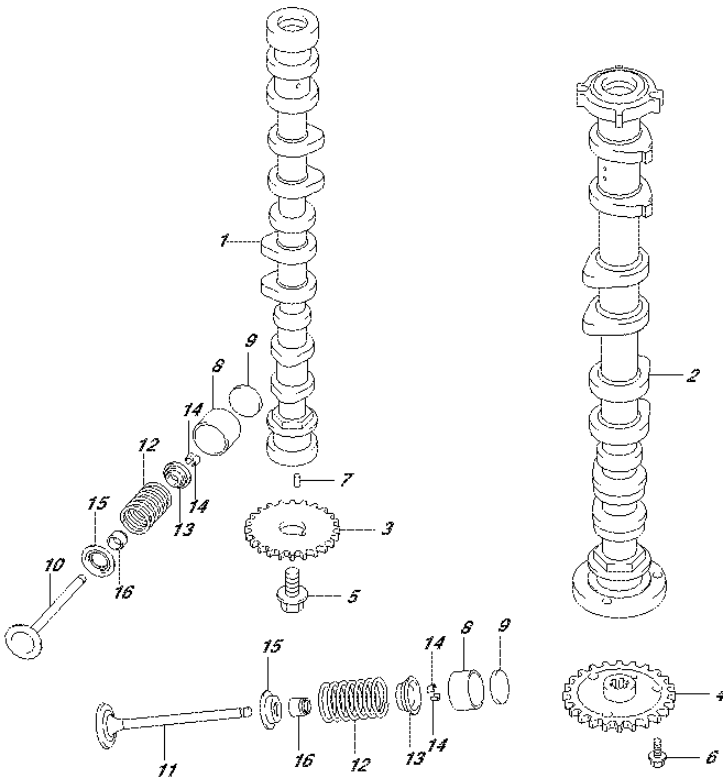

FIG.121C (1-B-11) CAMSHAFT (DF70ATH E01)

REF NO.	PART NO.	DESCRIPTION	Q'TY	REMARKS
10	12911-87L00	VALVE, INTAKE	8	
11	12915-87L50	VALVE, EXHAUST	8	
12	12921-87J10	SPRING, VALVE	16	
13	12931-78G00	RETAINER, VALVE SPRING	16	
14	12932-24400	COTTER, VALVE	32	
15	12933-51E00	SEAT, VALVE SPRING	16	
16	09289-05012	OIL SEAL (5.5X11.5X9.3)	16	

FIG.121D

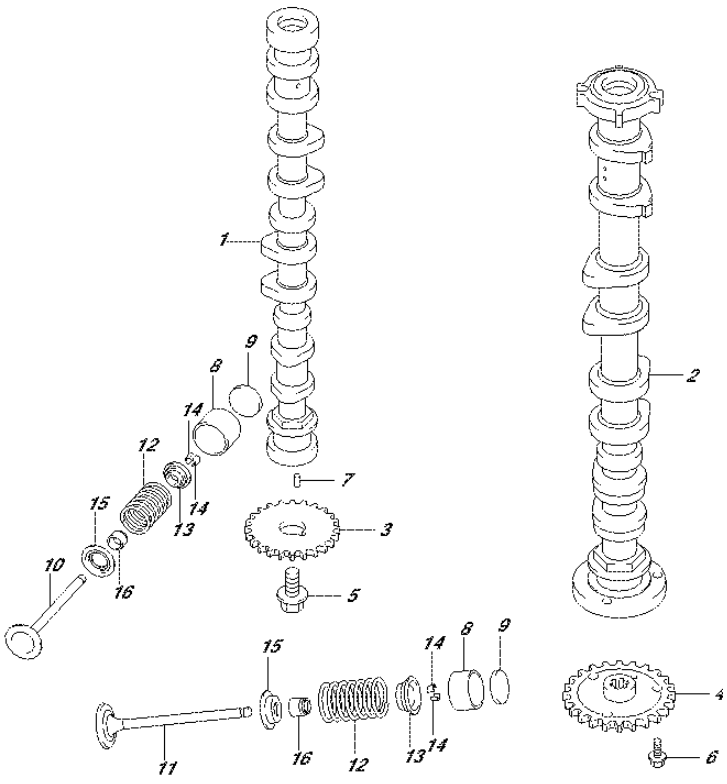

FIG.121D (1-B-12) CAMSHAFT (DF70ATH E40)

REF NO.	PART NO.	DESCRIPTION	Q'TY	REMARKS
1	12701-87L20	CAMSHAFT, INTAKE	1	
2	12705-87L00	CAMSHAFT, EXHAUST	1	
3	12741-90J01	SPROCKET, CAMSHAFT TIMING (NT:29)	1	
4	12748-87L00	SPROCKET, EXH CAMSHAFT (NT:29)	1	
5	12749-93J00	BOLT, CAMSHAFT	1	
6	01550-0612A	BOLT	3	
7	04221-05109	PIN	2	
8	12891-69J00	TAPPET	16	
9-1	12892-69J00-228	SHIM, TAPPET (T:2.28)	16	
9-2	12892-69J00-230	SHIM, TAPPET (T:2.30)	16	
9-3	12892-69J00-232	SHIM, TAPPET (T:2.32)	16	
9-4	12892-69J00-234	SHIM, TAPPET (T:2.34)	16	
9-5	12892-69J00-236	SHIM, TAPPET (T:2.36)	16	
9-6	12892-69J00-238	SHIM, TAPPET (T:2.38)	16	
9-7	12892-69J00-240	SHIM, TAPPET (T:2.40)	16	
9-8	12892-69J00-242	SHIM, TAPPET (T:2.42)	16	
9-9	12892-69J00-244	SHIM, TAPPET (T:2.44)	16	
9-10	12892-69J00-246	SHIM, TAPPET (T:2.46)	16	
9-11	12892-69J00-248	SHIM, TAPPET (T:2.48)	16	
9-12	12892-69J00-250	SHIM, TAPPET (T:2.50)	16	
9-13	12892-69J00-252	SHIM, TAPPET (T:2.52)	16	
9-14	12892-69J00-254	SHIM, TAPPET (T:2.54)	16	
9-15	12892-69J00-256	SHIM, TAPPET (T:2.56)	16	
9-16	12892-69J00-258	SHIM, TAPPET (T:2.58)	16	
9-17	12892-69J00-260	SHIM, TAPPET (T:2.60)	16	
9-18	12892-69J00-262	SHIM, TAPPET (T:2.62)	16	
9-19	12892-69J00-264	SHIM, TAPPET (T:2.64)	16	
9-20	12892-69J00-266	SHIM, TAPPET (T:2.66)	16	
9-21	12892-69J00-268	SHIM, TAPPET (T:2.68)	16	
9-22	12892-69J00-270	SHIM, TAPPET (T:2.70)	16	
9-23	12892-69J00-272	SHIM, TAPPET (T:2.72)	16	

FIG.121D

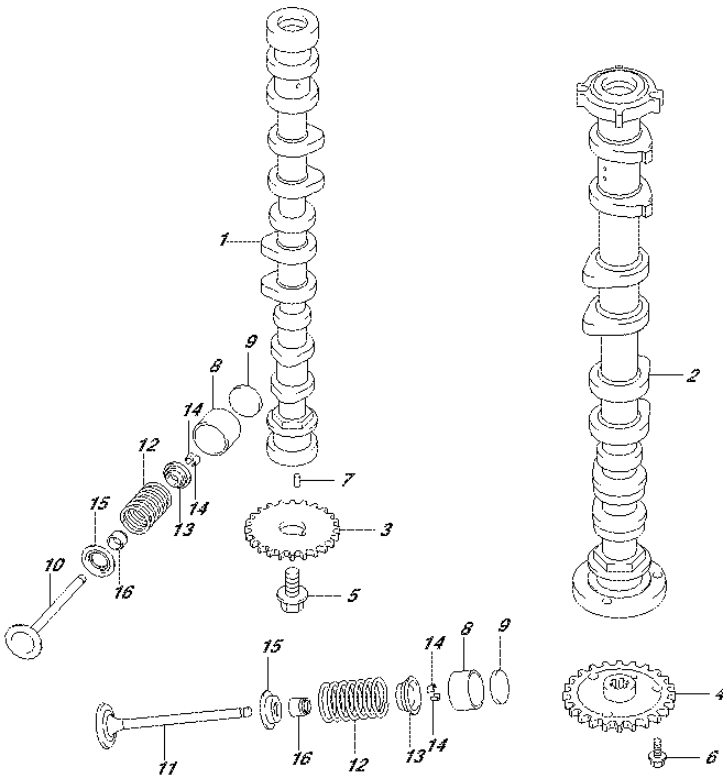

FIG.121D (1-B-13) CAMSHAFT (DF70ATH E40)

REF NO.	PART NO.	DESCRIPTION	Q'TY	REMARKS
10	12911-87L00	VALVE, INTAKE	8	
11	12915-87L50	VALVE, EXHAUST	8	
12	12921-87J10	SPRING, VALVE	16	
13	12931-78G00	RETAINER, VALVE SPRING	16	
14	12932-24400	COTTER, VALVE	32	
15	12933-51E00	SEAT, VALVE SPRING	16	
16	09289-05012	OIL SEAL (5.5X11.5X9.3)	16	

FIG.121E

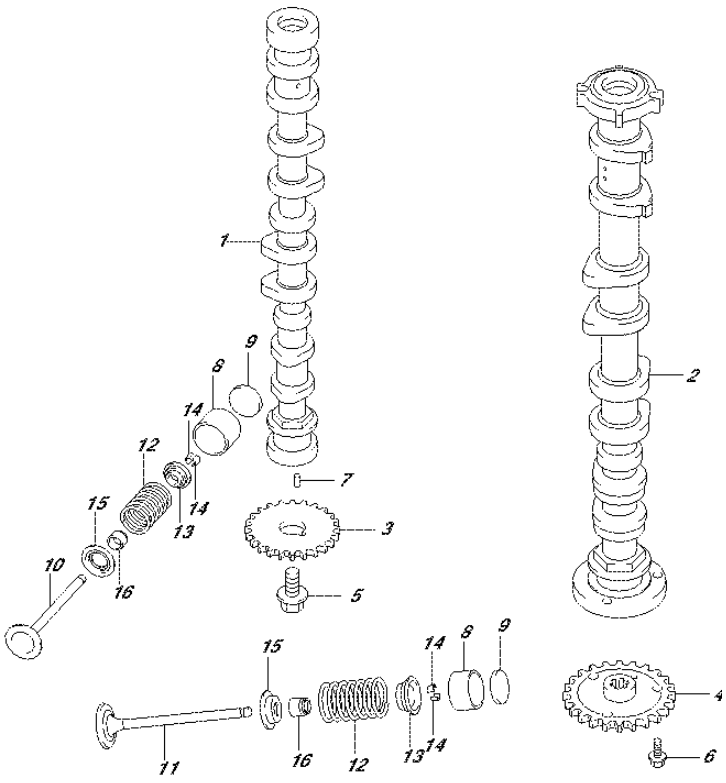

FIG.121E (1-B-14) CAMSHAFT (DF80A E01)

REF NO.	PART NO.	DESCRIPTION	Q'TY	REMARKS
1	12701-87L00	CAMSHAFT, INTAKE	1	
2	12705-87L00	CAMSHAFT, EXHAUST	1	
3	12741-90J01	SPROCKET, CAMSHAFT TIMING (NT:29)	1	
4	12748-87L00	SPROCKET, EXH CAMSHAFT (NT:29)	1	
5	12749-93J00	BOLT, CAMSHAFT	1	
6	01550-0612A	BOLT	3	
7	04221-05109	PIN	2	
8	12891-69J00	TAPPET	16	
9-1	12892-69J00-228	SHIM, TAPPET (T:2.28)	16	
9-2	12892-69J00-230	SHIM, TAPPET (T:2.30)	16	
9-3	12892-69J00-232	SHIM, TAPPET (T:2.32)	16	
9-4	12892-69J00-234	SHIM, TAPPET (T:2.34)	16	
9-5	12892-69J00-236	SHIM, TAPPET (T:2.36)	16	
9-6	12892-69J00-238	SHIM, TAPPET (T:2.38)	16	
9-7	12892-69J00-240	SHIM, TAPPET (T:2.40)	16	
9-8	12892-69J00-242	SHIM, TAPPET (T:2.42)	16	
9-9	12892-69J00-244	SHIM, TAPPET (T:2.44)	16	
9-10	12892-69J00-246	SHIM, TAPPET (T:2.46)	16	
9-11	12892-69J00-248	SHIM, TAPPET (T:2.48)	16	
9-12	12892-69J00-250	SHIM, TAPPET (T:2.50)	16	
9-13	12892-69J00-252	SHIM, TAPPET (T:2.52)	16	
9-14	12892-69J00-254	SHIM, TAPPET (T:2.54)	16	
9-15	12892-69J00-256	SHIM, TAPPET (T:2.56)	16	
9-16	12892-69J00-258	SHIM, TAPPET (T:2.58)	16	
9-17	12892-69J00-260	SHIM, TAPPET (T:2.60)	16	
9-18	12892-69J00-262	SHIM, TAPPET (T:2.62)	16	
9-19	12892-69J00-264	SHIM, TAPPET (T:2.64)	16	
9-20	12892-69J00-266	SHIM, TAPPET (T:2.66)	16	
9-21	12892-69J00-268	SHIM, TAPPET (T:2.68)	16	
9-22	12892-69J00-270	SHIM, TAPPET (T:2.70)	16	
9-23	12892-69J00-272	SHIM, TAPPET (T:2.72)	16	

FIG.121E

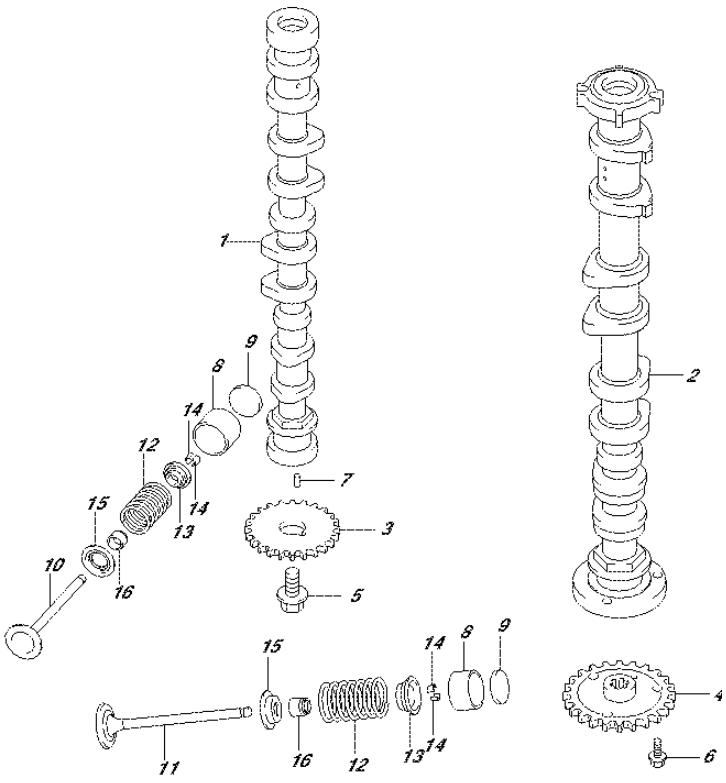

FIG.121E (1-B-15) CAMSHAFT (DF80A E01)

REF NO.	PART NO.	DESCRIPTION	Q'TY	REMARKS
10	12911-87L00	VALVE, INTAKE	8	
11	12915-87L50	VALVE, EXHAUST	8	
12	12921-87J10	SPRING, VALVE	16	
13	12931-78G00	RETAINER, VALVE SPRING	16	
14	12932-24400	COTTER, VALVE	32	
15	12933-51E00	SEAT, VALVE SPRING	16	
16	09289-05012	OIL SEAL (5.5X11.5X9.3)	16	

FIG.121F

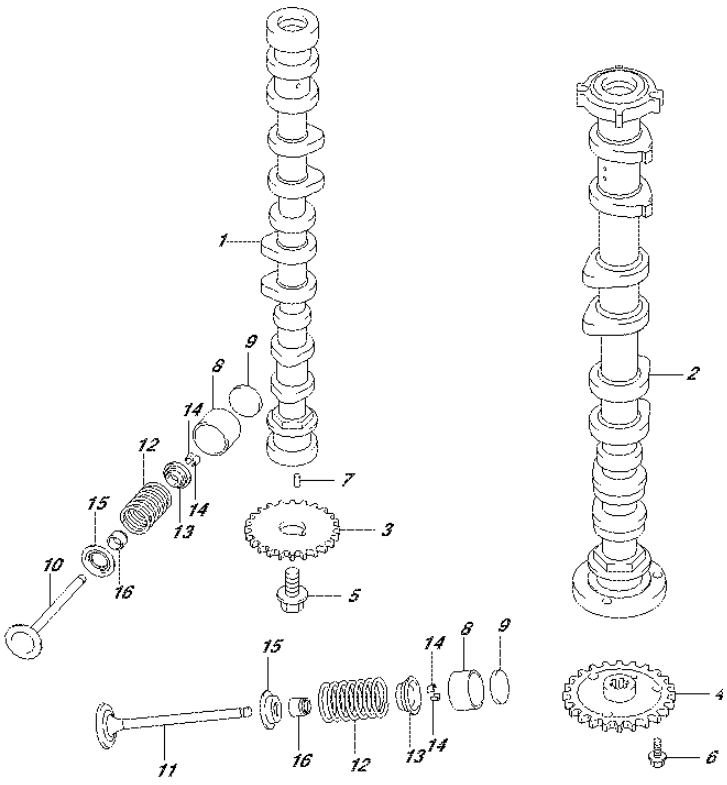

FIG.121F (1-C-2) CAMSHAFT (DF80A E40)

REF NO.	PART NO.	DESCRIPTION	Q'TY	REMARKS
1	12701-87L00	CAMSHAFT, INTAKE	1	
2	12705-87L00	CAMSHAFT, EXHAUST	1	
3	12741-90J01	SPROCKET, CAMSHAFT TIMING (NT:29)	1	
4	12748-87L00	SPROCKET, EXH CAMSHAFT (NT:29)	1	
5	12749-93J00	BOLT, CAMSHAFT	1	
6	01550-0612A	BOLT	3	
7	04221-05109	PIN	2	
8	12891-69J00	TAPPET	16	
9-1	12892-69J00-228	SHIM, TAPPET (T:2.28)	16	
9-2	12892-69J00-230	SHIM, TAPPET (T:2.30)	16	
9-3	12892-69J00-232	SHIM, TAPPET (T:2.32)	16	
9-4	12892-69J00-234	SHIM, TAPPET (T:2.34)	16	
9-5	12892-69J00-236	SHIM, TAPPET (T:2.36)	16	
9-6	12892-69J00-238	SHIM, TAPPET (T:2.38)	16	
9-7	12892-69J00-240	SHIM, TAPPET (T:2.40)	16	
9-8	12892-69J00-242	SHIM, TAPPET (T:2.42)	16	
9-9	12892-69J00-244	SHIM, TAPPET (T:2.44)	16	
9-10	12892-69J00-246	SHIM, TAPPET (T:2.46)	16	
9-11	12892-69J00-248	SHIM, TAPPET (T:2.48)	16	
9-12	12892-69J00-250	SHIM, TAPPET (T:2.50)	16	
9-13	12892-69J00-252	SHIM, TAPPET (T:2.52)	16	
9-14	12892-69J00-254	SHIM, TAPPET (T:2.54)	16	
9-15	12892-69J00-256	SHIM, TAPPET (T:2.56)	16	
9-16	12892-69J00-258	SHIM, TAPPET (T:2.58)	16	
9-17	12892-69J00-260	SHIM, TAPPET (T:2.60)	16	
9-18	12892-69J00-262	SHIM, TAPPET (T:2.62)	16	
9-19	12892-69J00-264	SHIM, TAPPET (T:2.64)	16	
9-20	12892-69J00-266	SHIM, TAPPET (T:2.66)	16	
9-21	12892-69J00-268	SHIM, TAPPET (T:2.68)	16	
9-22	12892-69J00-270	SHIM, TAPPET (T:2.70)	16	
9-23	12892-69J00-272	SHIM, TAPPET (T:2.72)	16	

FIG.121F

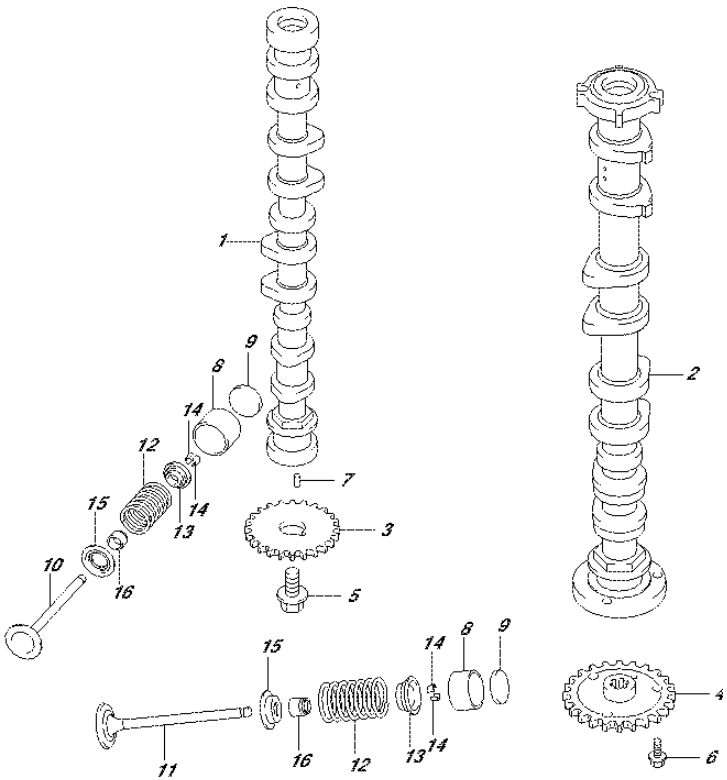

FIG.121F (1-C-3) CAMSHAFT (DF80A E40)

REF NO.	PART NO.	DESCRIPTION	Q'TY	REMARKS
10	12911-87L00	VALVE, INTAKE	8	
11	12915-87L50	VALVE, EXHAUST	8	
12	12921-87J10	SPRING, VALVE	16	
13	12931-78G00	RETAINER, VALVE SPRING	16	
14	12932-24400	COTTER, VALVE	32	
15	12933-51E00	SEAT, VALVE SPRING	16	
16	09289-05012	OIL SEAL (5.5X11.5X9.3)	16	

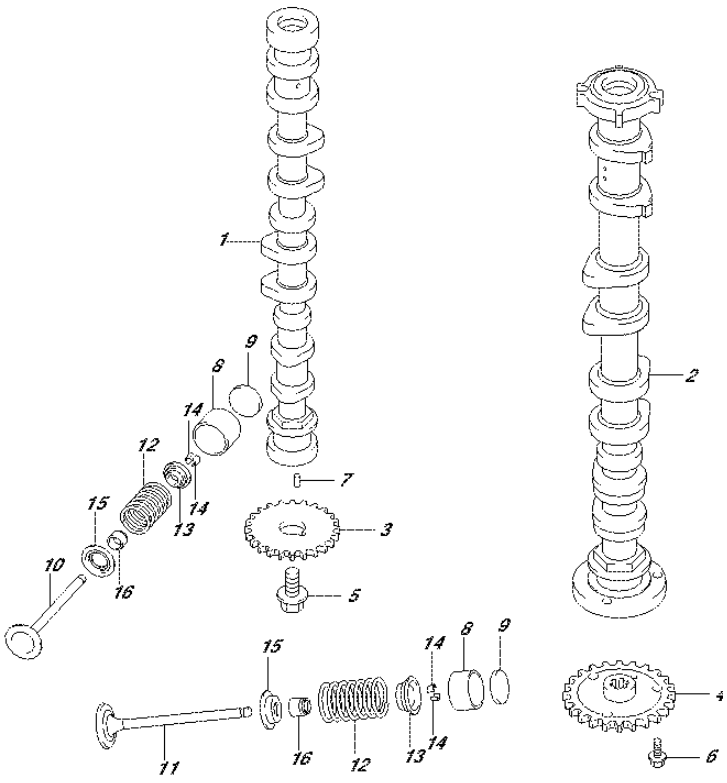

FIG.121G (1-C-4) CAMSHAFT (DF90A E01)

REF NO.	PART NO.	DESCRIPTION	Q'TY	REMARKS
1	12701-87L10	CAMSHAFT, INTAKE	1	
2	12705-87L10	CAMSHAFT, EXHAUST	1	
3	12741-90J01	SPROCKET, CAMSHAFT TIMING (NT:29)	1	
4	12748-87L00	SPROCKET, EXH CAMSHAFT (NT:29)	1	
5	12749-93J00	BOLT, CAMSHAFT	1	
6	01550-0612A	BOLT	3	
7	04221-05109	PIN	2	
8	12891-69J00	TAPPET	16	
9-1	12892-69J00-228	SHIM, TAPPET (T:2.28)	16	
9-2	12892-69J00-230	SHIM, TAPPET (T:2.30)	16	
9-3	12892-69J00-232	SHIM, TAPPET (T:2.32)	16	
9-4	12892-69J00-234	SHIM, TAPPET (T:2.34)	16	
9-5	12892-69J00-236	SHIM, TAPPET (T:2.36)	16	
9-6	12892-69J00-238	SHIM, TAPPET (T:2.38)	16	
9-7	12892-69J00-240	SHIM, TAPPET (T:2.40)	16	
9-8	12892-69J00-242	SHIM, TAPPET (T:2.42)	16	
9-9	12892-69J00-244	SHIM, TAPPET (T:2.44)	16	
9-10	12892-69J00-246	SHIM, TAPPET (T:2.46)	16	
9-11	12892-69J00-248	SHIM, TAPPET (T:2.48)	16	
9-12	12892-69J00-250	SHIM, TAPPET (T:2.50)	16	
9-13	12892-69J00-252	SHIM, TAPPET (T:2.52)	16	
9-14	12892-69J00-254	SHIM, TAPPET (T:2.54)	16	
9-15	12892-69J00-256	SHIM, TAPPET (T:2.56)	16	
9-16	12892-69J00-258	SHIM, TAPPET (T:2.58)	16	
9-17	12892-69J00-260	SHIM, TAPPET (T:2.60)	16	
9-18	12892-69J00-262	SHIM, TAPPET (T:2.62)	16	
9-19	12892-69J00-264	SHIM, TAPPET (T:2.64)	16	
9-20	12892-69J00-266	SHIM, TAPPET (T:2.66)	16	
9-21	12892-69J00-268	SHIM, TAPPET (T:2.68)	16	
9-22	12892-69J00-270	SHIM, TAPPET (T:2.70)	16	
9-23	12892-69J00-272	SHIM, TAPPET (T:2.72)	16	

FIG.121G

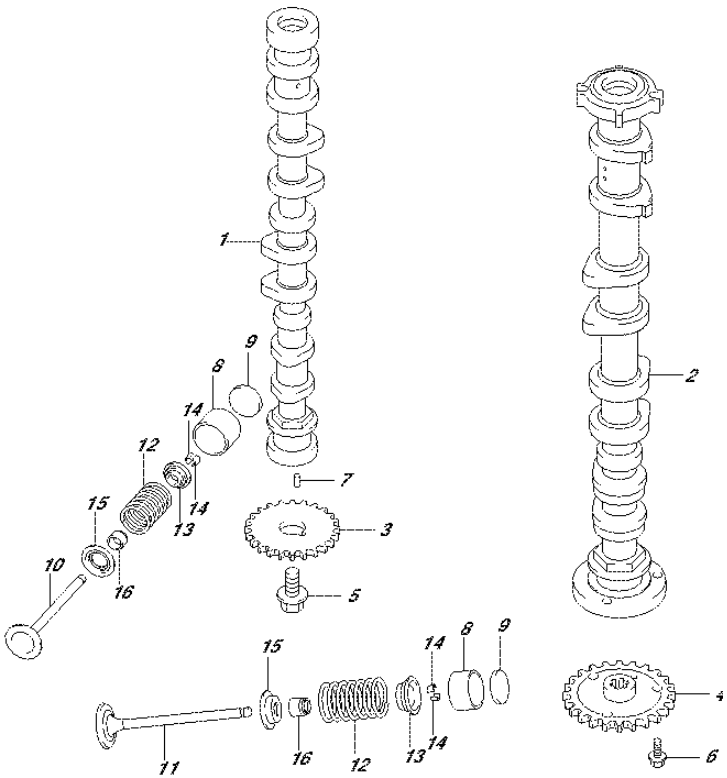

FIG.121G (1-C-5) CAMSHAFT (DF90A E01)

REF NO.	PART NO.	DESCRIPTION	Q'TY	REMARKS
10	12911-87L00	VALVE, INTAKE	8	
11	12915-87L50	VALVE, EXHAUST	8	
12	12921-87J10	SPRING, VALVE	16	
13	12931-78G00	RETAINER, VALVE SPRING	16	
14	12932-24400	COTTER, VALVE	32	
15	12933-51E00	SEAT, VALVE SPRING	16	
16	09289-05012	OIL SEAL (5.5X11.5X9.3)	16	

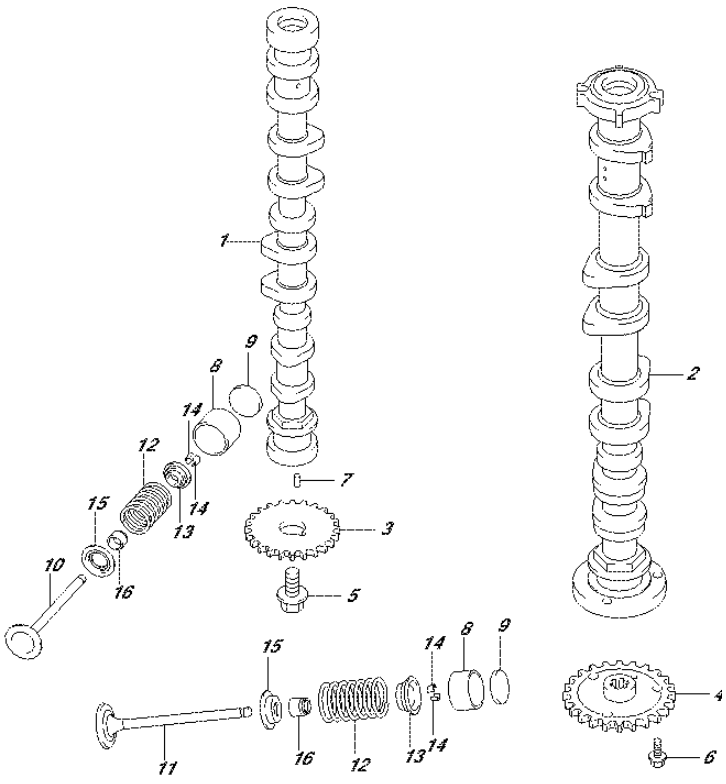

FIG.121H (1-C-6) CAMSHAFT (DF90A E40)

REF NO.	PART NO.	DESCRIPTION	Q'TY	REMARKS
1	12701-87L10	CAMSHAFT, INTAKE	1	
2	12705-87L10	CAMSHAFT, EXHAUST	1	
3	12741-90J01	SPROCKET, CAMSHAFT TIMING (NT:29)	1	
4	12748-87L00	SPROCKET, EXH CAMSHAFT (NT:29)	1	
5	12749-93J00	BOLT, CAMSHAFT	1	
6	01550-0612A	BOLT	3	
7	04221-05109	PIN	2	
8	12891-69J00	TAPPET	16	
9-1	12892-69J00-228	SHIM, TAPPET (T:2.28)	16	
9-2	12892-69J00-230	SHIM, TAPPET (T:2.30)	16	
9-3	12892-69J00-232	SHIM, TAPPET (T:2.32)	16	
9-4	12892-69J00-234	SHIM, TAPPET (T:2.34)	16	
9-5	12892-69J00-236	SHIM, TAPPET (T:2.36)	16	
9-6	12892-69J00-238	SHIM, TAPPET (T:2.38)	16	
9-7	12892-69J00-240	SHIM, TAPPET (T:2.40)	16	
9-8	12892-69J00-242	SHIM, TAPPET (T:2.42)	16	
9-9	12892-69J00-244	SHIM, TAPPET (T:2.44)	16	
9-10	12892-69J00-246	SHIM, TAPPET (T:2.46)	16	
9-11	12892-69J00-248	SHIM, TAPPET (T:2.48)	16	
9-12	12892-69J00-250	SHIM, TAPPET (T:2.50)	16	
9-13	12892-69J00-252	SHIM, TAPPET (T:2.52)	16	
9-14	12892-69J00-254	SHIM, TAPPET (T:2.54)	16	
9-15	12892-69J00-256	SHIM, TAPPET (T:2.56)	16	
9-16	12892-69J00-258	SHIM, TAPPET (T:2.58)	16	
9-17	12892-69J00-260	SHIM, TAPPET (T:2.60)	16	
9-18	12892-69J00-262	SHIM, TAPPET (T:2.62)	16	
9-19	12892-69J00-264	SHIM, TAPPET (T:2.64)	16	
9-20	12892-69J00-266	SHIM, TAPPET (T:2.66)	16	
9-21	12892-69J00-268	SHIM, TAPPET (T:2.68)	16	
9-22	12892-69J00-270	SHIM, TAPPET (T:2.70)	16	
9-23	12892-69J00-272	SHIM, TAPPET (T:2.72)	16	

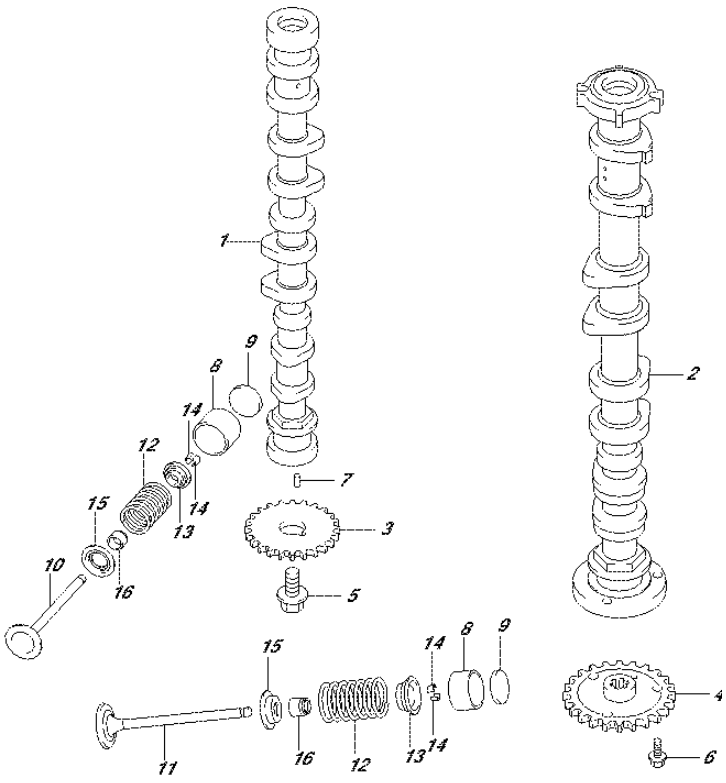

FIG.121H (1-C-7) CAMSHAFT (DF90A E40)

REF NO.	PART NO.	DESCRIPTION	Q'TY	REMARKS
10	12911-87L00	VALVE, INTAKE	8	
11	12915-87L50	VALVE, EXHAUST	8	
12	12921-87J10	SPRING, VALVE	16	
13	12931-78G00	RETAINER, VALVE SPRING	16	
14	12932-24400	COTTER, VALVE	32	
15	12933-51E00	SEAT, VALVE SPRING	16	
16	09289-05012	OIL SEAL (5.5X11.5X9.3)	16	

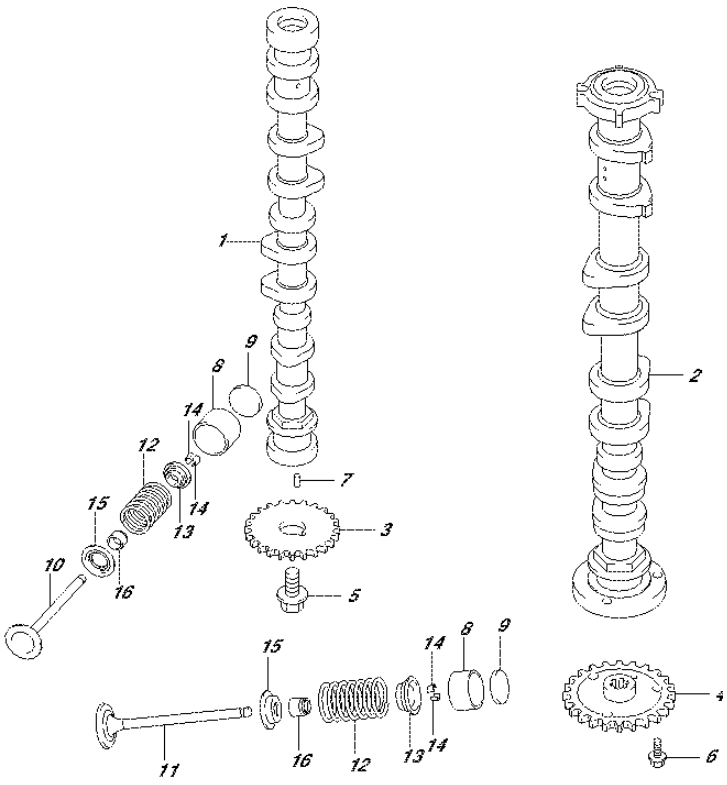

FIG.121J (1-C-8) CAMSHAFT (DF90ATH E01)

REF NO.	PART NO.	DESCRIPTION	Q'TY	REMARKS
1	12701-87L10	CAMSHAFT, INTAKE	1	
2	12705-87L10	CAMSHAFT, EXHAUST	1	
3	12741-90J01	SPROCKET, CAMSHAFT TIMING (NT:29)	1	
4	12748-87L00	SPROCKET, EXH CAMSHAFT (NT:29)	1	
5	12749-93J00	BOLT, CAMSHAFT	1	
6	01550-0612A	BOLT	3	
7	04221-05109	PIN	2	
8	12891-69J00	TAPPET	16	
9-1	12892-69J00-228	SHIM, TAPPET (T:2.28)	16	
9-2	12892-69J00-230	SHIM, TAPPET (T:2.30)	16	
9-3	12892-69J00-232	SHIM, TAPPET (T:2.32)	16	
9-4	12892-69J00-234	SHIM, TAPPET (T:2.34)	16	
9-5	12892-69J00-236	SHIM, TAPPET (T:2.36)	16	
9-6	12892-69J00-238	SHIM, TAPPET (T:2.38)	16	
9-7	12892-69J00-240	SHIM, TAPPET (T:2.40)	16	
9-8	12892-69J00-242	SHIM, TAPPET (T:2.42)	16	
9-9	12892-69J00-244	SHIM, TAPPET (T:2.44)	16	
9-10	12892-69J00-246	SHIM, TAPPET (T:2.46)	16	
9-11	12892-69J00-248	SHIM, TAPPET (T:2.48)	16	
9-12	12892-69J00-250	SHIM, TAPPET (T:2.50)	16	
9-13	12892-69J00-252	SHIM, TAPPET (T:2.52)	16	
9-14	12892-69J00-254	SHIM, TAPPET (T:2.54)	16	
9-15	12892-69J00-256	SHIM, TAPPET (T:2.56)	16	
9-16	12892-69J00-258	SHIM, TAPPET (T:2.58)	16	
9-17	12892-69J00-260	SHIM, TAPPET (T:2.60)	16	
9-18	12892-69J00-262	SHIM, TAPPET (T:2.62)	16	
9-19	12892-69J00-264	SHIM, TAPPET (T:2.64)	16	
9-20	12892-69J00-266	SHIM, TAPPET (T:2.66)	16	
9-21	12892-69J00-268	SHIM, TAPPET (T:2.68)	16	
9-22	12892-69J00-270	SHIM, TAPPET (T:2.70)	16	
9-23	12892-69J00-272	SHIM, TAPPET (T:2.72)	16	

FIG.121J

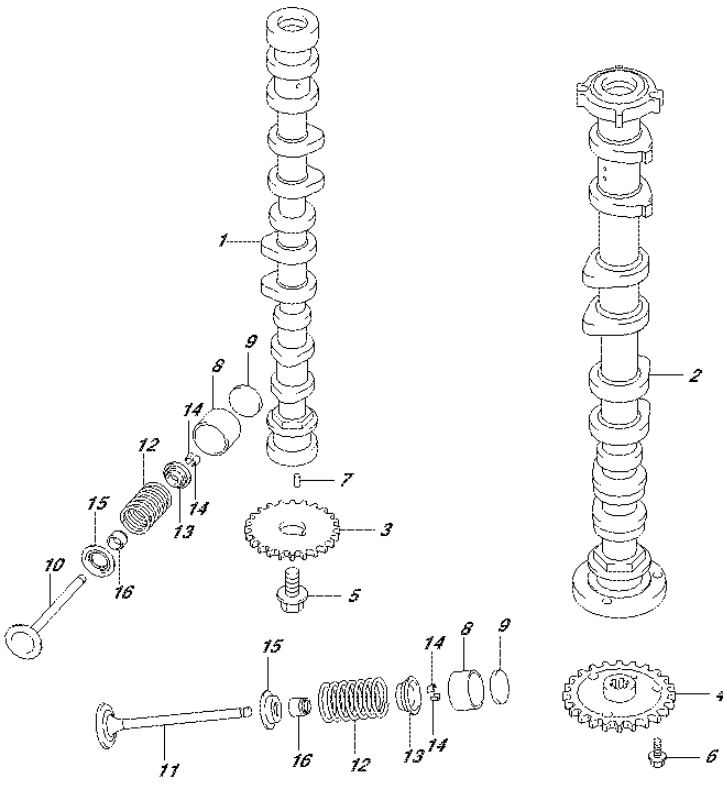

FIG.121J (1-C-9) CAMSHAFT (DF90ATH E01)

REF NO.	PART NO.	DESCRIPTION	Q'TY	REMARKS
10	12911-87L00	VALVE, INTAKE	8	
11	12915-87L50	VALVE, EXHAUST	8	
12	12921-87J10	SPRING, VALVE	16	
13	12931-78G00	RETAINER, VALVE SPRING	16	
14	12932-24400	COTTER, VALVE	32	
15	12933-51E00	SEAT, VALVE SPRING	16	
16	09289-05012	OIL SEAL (5.5X11.5X9.3)	16	

FIG.121K

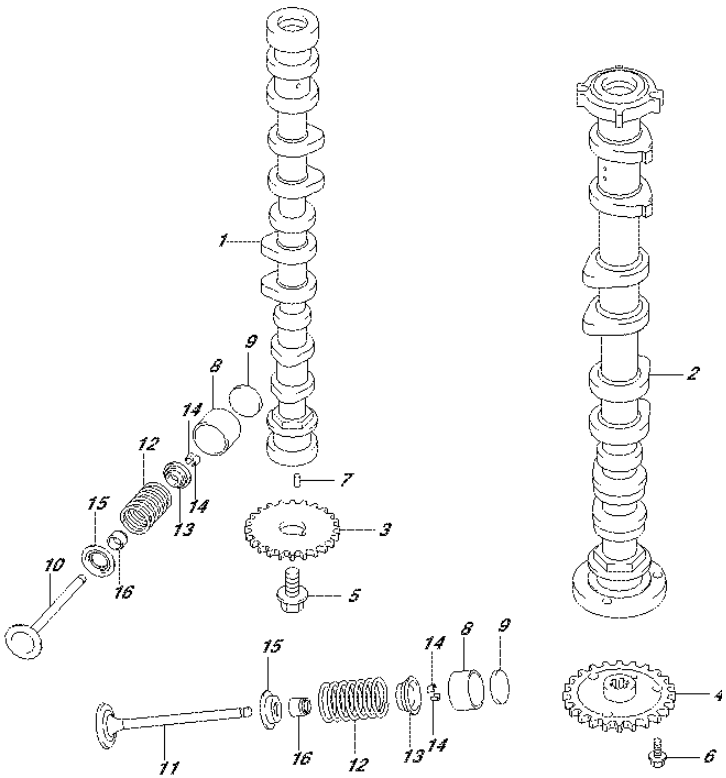

FIG.121K (1-C-10) CAMSHAFT (DF90ATH E40)

REF NO.	PART NO.	DESCRIPTION	Q'TY	REMARKS
1	12701-87L10	CAMSHAFT, INTAKE	1	
2	12705-87L10	CAMSHAFT, EXHAUST	1	
3	12741-90J01	SPROCKET, CAMSHAFT TIMING (NT:29)	1	
4	12748-87L00	SPROCKET, EXH CAMSHAFT (NT:29)	1	
5	12749-93J00	BOLT, CAMSHAFT	1	
6	01550-0612A	BOLT	3	
7	04221-05109	PIN	2	
8	12891-69J00	TAPPET	16	
9-1	12892-69J00-228	SHIM, TAPPET (T:2.28)	16	
9-2	12892-69J00-230	SHIM, TAPPET (T:2.30)	16	
9-3	12892-69J00-232	SHIM, TAPPET (T:2.32)	16	
9-4	12892-69J00-234	SHIM, TAPPET (T:2.34)	16	
9-5	12892-69J00-236	SHIM, TAPPET (T:2.36)	16	
9-6	12892-69J00-238	SHIM, TAPPET (T:2.38)	16	
9-7	12892-69J00-240	SHIM, TAPPET (T:2.40)	16	
9-8	12892-69J00-242	SHIM, TAPPET (T:2.42)	16	
9-9	12892-69J00-244	SHIM, TAPPET (T:2.44)	16	
9-10	12892-69J00-246	SHIM, TAPPET (T:2.46)	16	
9-11	12892-69J00-248	SHIM, TAPPET (T:2.48)	16	
9-12	12892-69J00-250	SHIM, TAPPET (T:2.50)	16	
9-13	12892-69J00-252	SHIM, TAPPET (T:2.52)	16	
9-14	12892-69J00-254	SHIM, TAPPET (T:2.54)	16	
9-15	12892-69J00-256	SHIM, TAPPET (T:2.56)	16	
9-16	12892-69J00-258	SHIM, TAPPET (T:2.58)	16	
9-17	12892-69J00-260	SHIM, TAPPET (T:2.60)	16	
9-18	12892-69J00-262	SHIM, TAPPET (T:2.62)	16	
9-19	12892-69J00-264	SHIM, TAPPET (T:2.64)	16	
9-20	12892-69J00-266	SHIM, TAPPET (T:2.66)	16	
9-21	12892-69J00-268	SHIM, TAPPET (T:2.68)	16	
9-22	12892-69J00-270	SHIM, TAPPET (T:2.70)	16	
9-23	12892-69J00-272	SHIM, TAPPET (T:2.72)	16	

FIG.121K

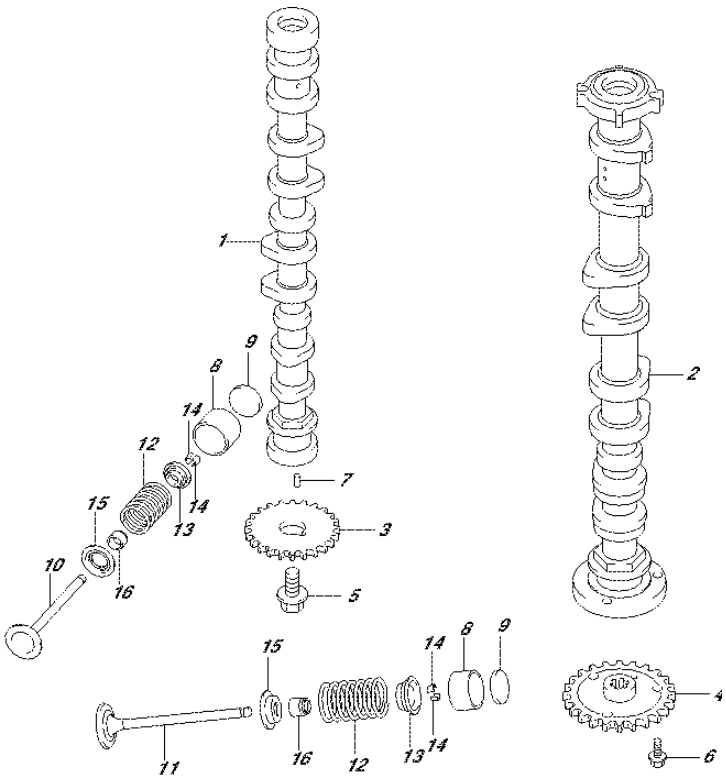

FIG.121K (1-C-11) CAMSHAFT (DF90ATH E40)

REF NO.	PART NO.	DESCRIPTION	Q'TY	REMARKS
10	12911-87L00	VALVE, INTAKE	8	
11	12915-87L50	VALVE, EXHAUST	8	
12	12921-87J10	SPRING, VALVE	16	
13	12931-78G00	RETAINER, VALVE SPRING	16	
14	12932-24400	COTTER, VALVE	32	
15	12933-51E00	SEAT, VALVE SPRING	16	
16	09289-05012	OIL SEAL (5.5X11.5X9.3)	16	

FIG. 122A

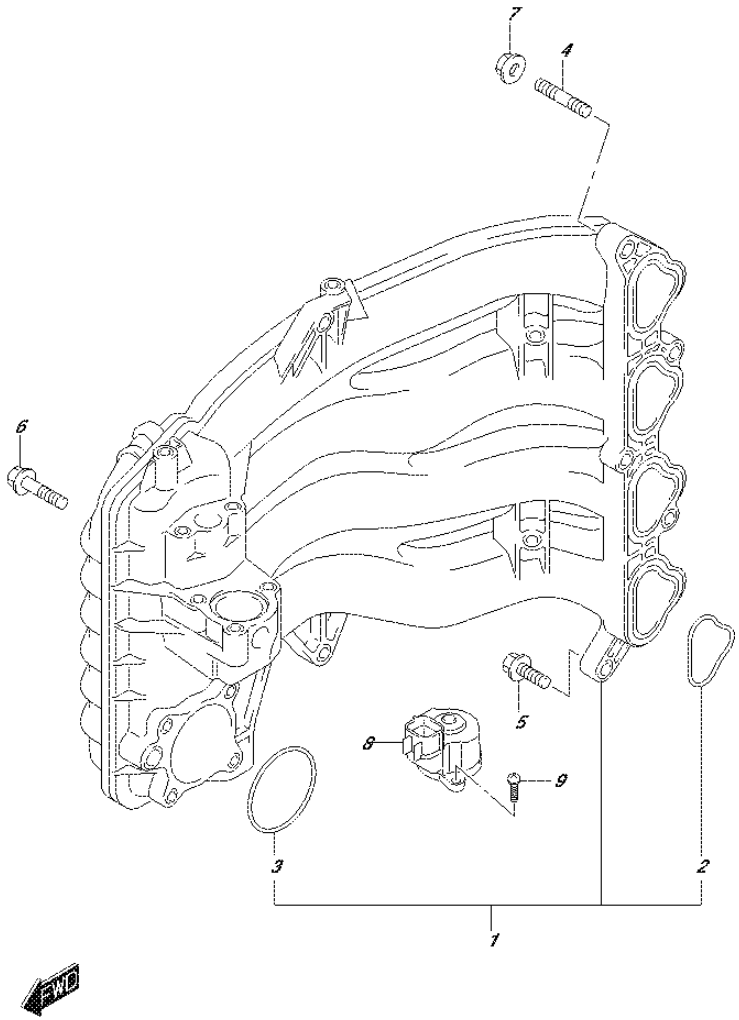

FIG.122A (1-C-12) INTAKE MANIFOLD

REF NO.	PART NO.	DESCRIPTION	Q'TY	REMARKS
1	13110-87L00	MANIFOLD, INTAKE	1	
2	13119-87L00	.GASKET, INTAKE MANIFOLD	4	
3	13125-87L00	.GASKET, THROTTLE BODY	1	
4	01421-08257	STUD BOLT	2	
5	01550-08307	BOLT	4	
6	01550-08457	BOLT	1	
7	08316-10087	NUT	2	
8	18137-87L01	VALVE, IAC	1	
9	02112-34167	SCREW	3	

FIG.134A

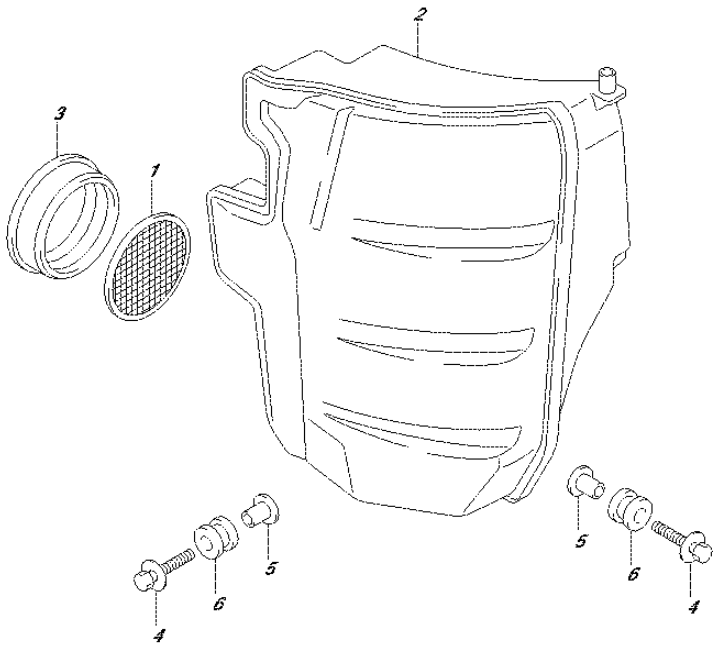

FIG.134A (1-C-13) SILENCER

REF NO.	PART NO.	DESCRIPTION	Q'TY	REMARKS
1	13710-99E00	ARRESTER, FLAME	1	
2	13810-87L00	SILENCER	1	
3	13813-87L00	HOLDER, FLAME ARRESTER	1	
4	09116-06215	BOLT (6X30)	2	
5	09169-06075	WASHER	2	
6	09320-09039	CUSHION	2	

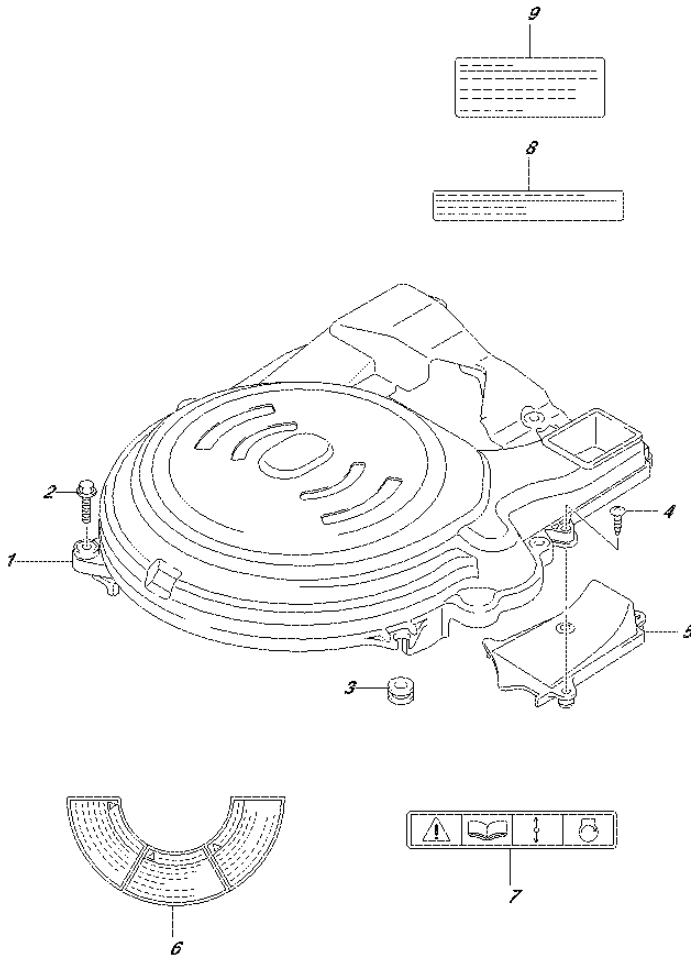

FIG.136A (1-C-14) RING GEAR COVER (DF70A E01)

REF NO.	PART NO.	DESCRIPTION	Q'TY	REMARKS
1	11510-87L02	COVER, RING GEAR	1	
2	01550-06307	BOLT	4	
3	09320-09016	CUSHION	1	
4	03542-06209	SCREW	2	
5	11514-87L00	PLATE, RING GEAR COVER	1	
6	61472-93E40	LABEL, MAG COVER	1	
7	69711-93E10	LABEL (S.I.G.P.)	1	
8	61493-96J00	LABEL, CLEARANCE	1	
9	61494-87L00	LABEL, OIL	1	

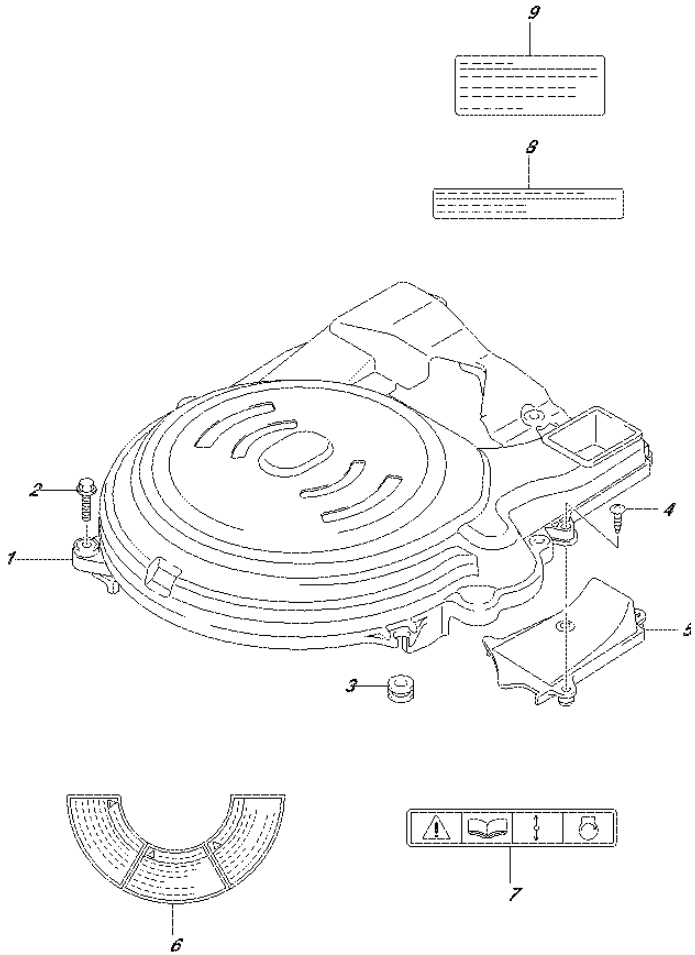

FIG.136B (1-C-15) RING GEAR COVER (DF70A E40)

REF NO.	PART NO.	DESCRIPTION	Q'TY	REMARKS
1	11510-87L02	COVER, RING GEAR	1	
2	01550-06307	BOLT	4	
3	09320-09016	CUSHION	1	
4	03542-06209	SCREW	2	
5	11514-87L00	PLATE, RING GEAR COVER	1	
6	61472-93E32	LABEL, MAG COVER	1	
7	69711-93E10	LABEL (S.I.G.P.)	1	
8	61493-96J00	LABEL, CLEARANCE	1	
9	61494-87L00	LABEL, OIL	1	

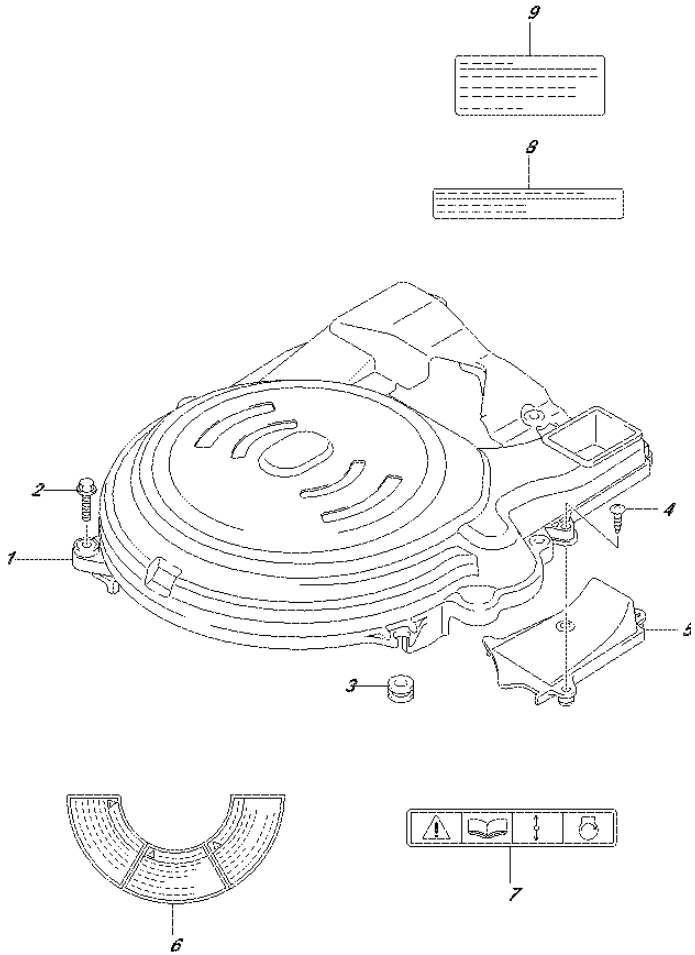

FIG.136C (1-D-2) RING GEAR COVER (DF70ATH E01)

REF NO.	PART NO.	DESCRIPTION	Q'TY	REMARKS
1	11510-87L02	COVER, RING GEAR	1	
2	01550-06307	BOLT	4	
3	09320-09016	CUSHION	1	
4	03542-06209	SCREW	2	
5	11514-87L00	PLATE, RING GEAR COVER	1	
6	61472-93E40	LABEL, MAG COVER	1	
7	69711-93E10	LABEL (S.I.G.P.)	1	
8	61493-96J00	LABEL, CLEARANCE	1	
9	61494-87L00	LABEL, OIL	1	

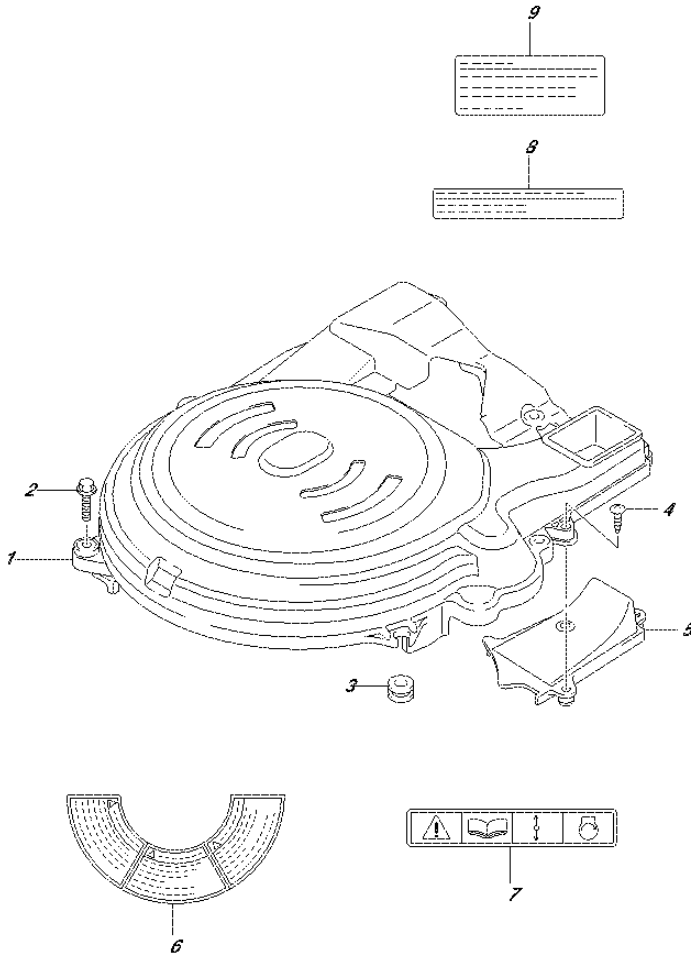

FIG.136D (1-D-3) RING GEAR COVER (DF70ATH E40)

REF NO.	PART NO.	DESCRIPTION	Q'TY	REMARKS
1	11510-87L02	COVER, RING GEAR	1	
2	01550-06307	BOLT	4	
3	09320-09016	CUSHION	1	
4	03542-06209	SCREW	2	
5	11514-87L00	PLATE, RING GEAR COVER	1	
6	61472-93E32	LABEL, MAG COVER	1	
7	69711-93E10	LABEL (S.I.G.P.)	1	
8	61493-96J00	LABEL, CLEARANCE	1	
9	61494-87L00	LABEL, OIL	1	

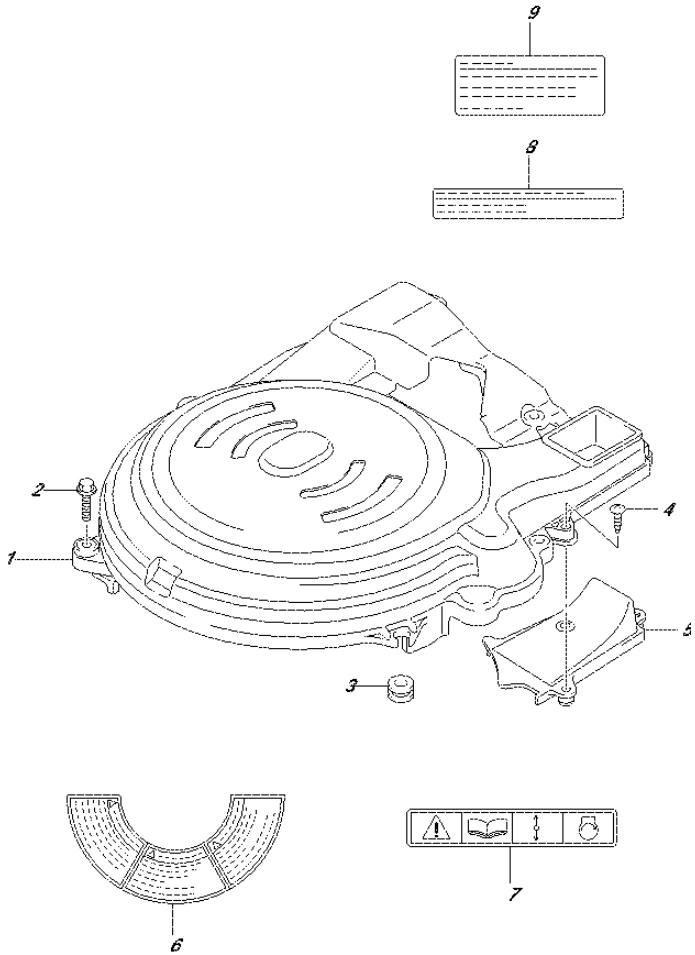

FIG.136E (1-D-4) RING GEAR COVER (DF80A E01)

REF NO.	PART NO.	DESCRIPTION	Q'TY	REMARKS
1	11510-87L02	COVER, RING GEAR	1	
2	01550-06307	BOLT	4	
3	09320-09016	CUSHION	1	
4	03542-06209	SCREW	2	
5	11514-87L00	PLATE, RING GEAR COVER	1	
6	61472-93E40	LABEL, MAG COVER	1	
7	69711-93E10	LABEL (S.I.G.P.)	1	
8	61493-96J00	LABEL, CLEARANCE	1	
9	61494-87L00	LABEL, OIL	1	

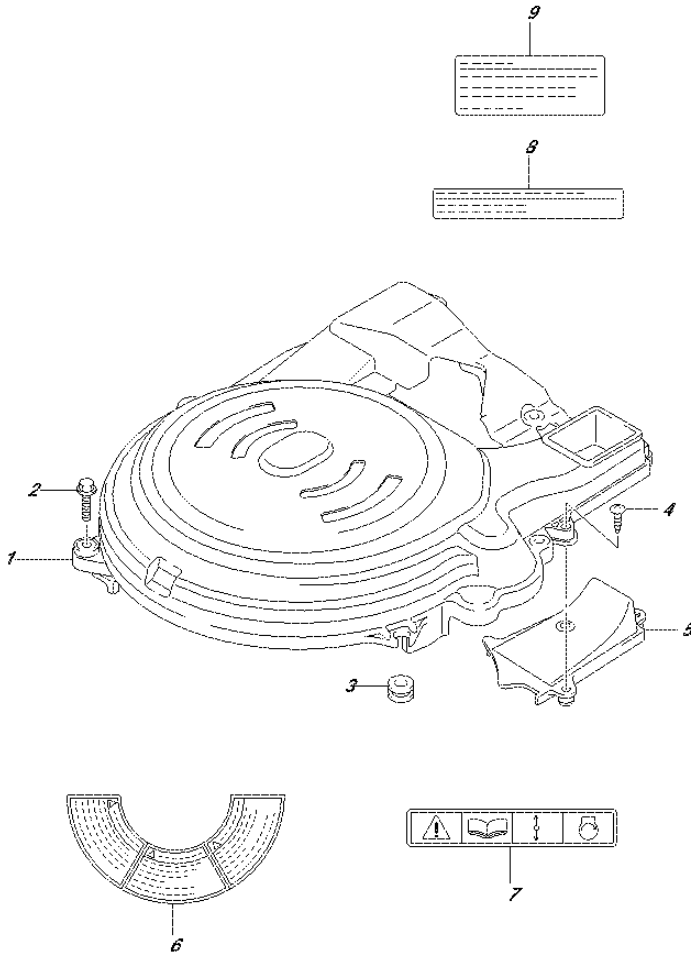

FIG.136F (1-D-5) RING GEAR COVER (DF80A E40)

REF NO.	PART NO.	DESCRIPTION	Q'TY	REMARKS
1	11510-87L02	COVER, RING GEAR	1	
2	01550-06307	BOLT	4	
3	09320-09016	CUSHION	1	
4	03542-06209	SCREW	2	
5	11514-87L00	PLATE, RING GEAR COVER	1	
6	61472-93E32	LABEL, MAG COVER	1	
7	69711-93E10	LABEL (S.I.G.P.)	1	
8	61493-96J00	LABEL, CLEARANCE	1	
9	61494-87L00	LABEL, OIL	1	

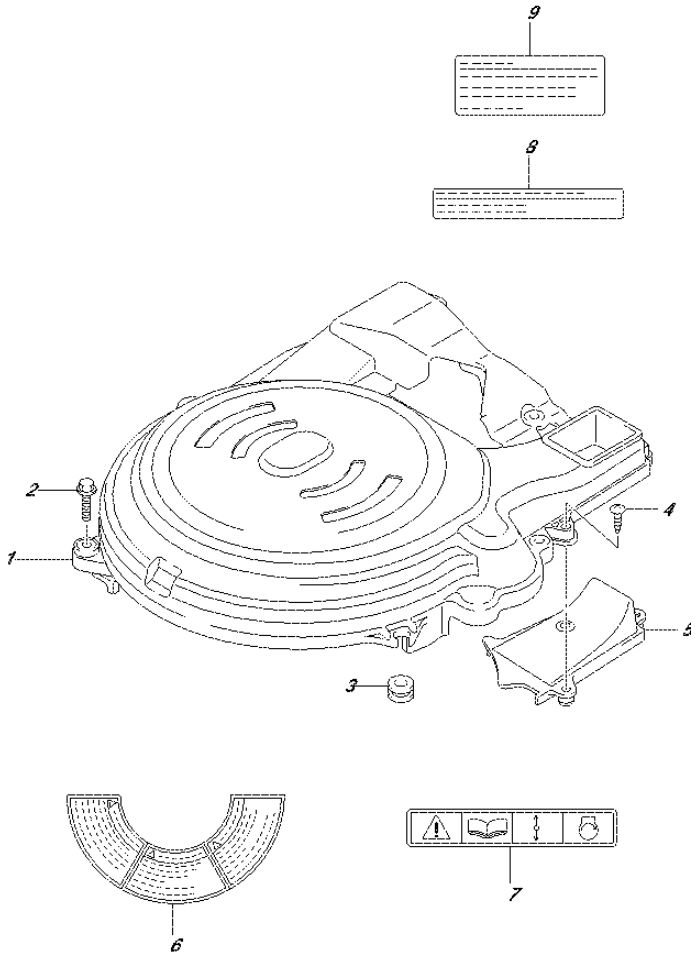

FIG.136G (1-D-6) RING GEAR COVER (DF90A E01)

REF NO.	PART NO.	DESCRIPTION	Q'TY	REMARKS
1	11510-87L02	COVER, RING GEAR	1	
2	01550-06307	BOLT	4	
3	09320-09016	CUSHION	1	
4	03542-06209	SCREW	2	
5	11514-87L00	PLATE, RING GEAR COVER	1	
6	61472-93E40	LABEL, MAG COVER	1	
7	69711-93E10	LABEL (S.I.G.P.)	1	
8	61493-96J00	LABEL, CLEARANCE	1	
9	61494-87L00	LABEL, OIL	1	

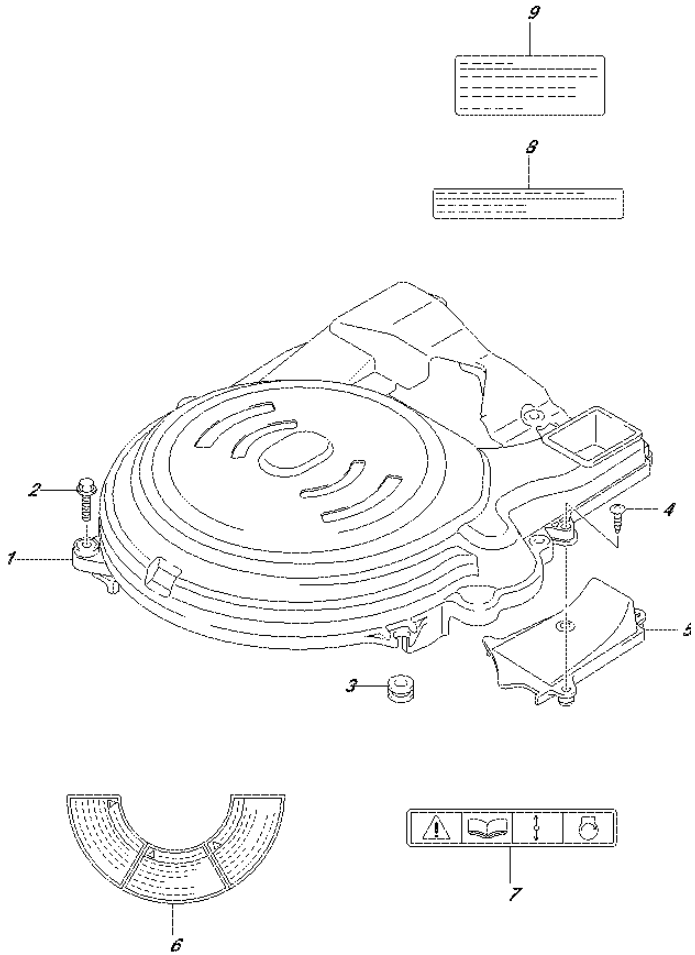

FIG.136H (1-D-7) RING GEAR COVER (DF90A E40)

REF NO.	PART NO.	DESCRIPTION	Q'TY	REMARKS
1	11510-87L02	COVER, RING GEAR	1	
2	01550-06307	BOLT	4	
3	09320-09016	CUSHION	1	
4	03542-06209	SCREW	2	
5	11514-87L00	PLATE, RING GEAR COVER	1	
6	61472-93E32	LABEL, MAG COVER	1	
7	69711-93E10	LABEL (S.I.G.P.)	1	
8	61493-96J00	LABEL, CLEARANCE	1	
9	61494-87L00	LABEL, OIL	1	

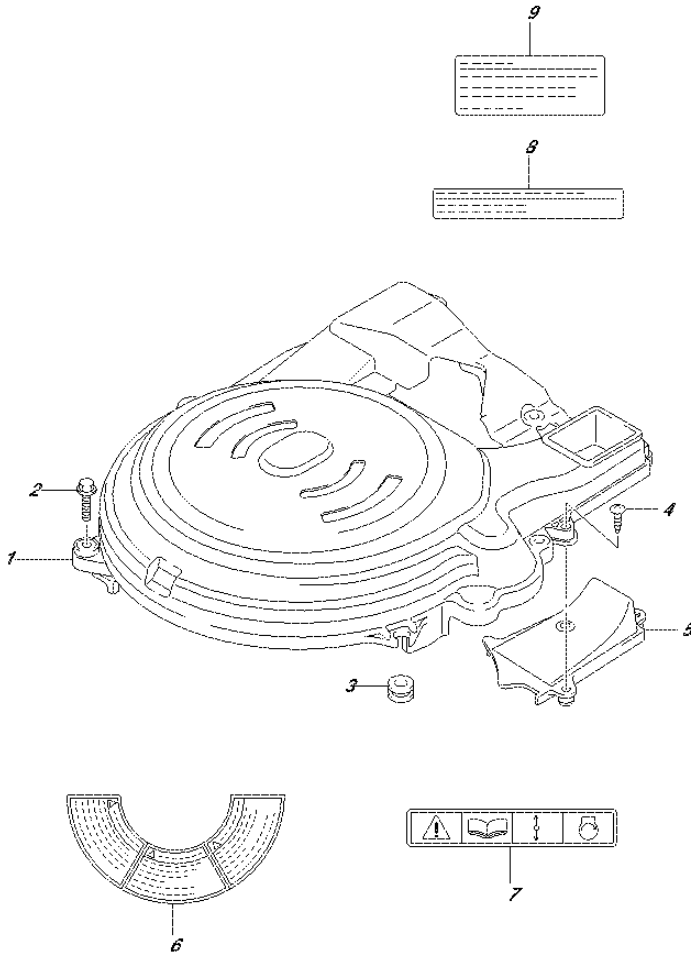

FIG.136J (1-D-8) RING GEAR COVER (DF90ATH E01)

REF NO.	PART NO.	DESCRIPTION	Q'TY	REMARKS
1	11510-87L02	COVER, RING GEAR	1	
2	01550-06307	BOLT	4	
3	09320-09016	CUSHION	1	
4	03542-06209	SCREW	2	
5	11514-87L00	PLATE, RING GEAR COVER	1	
6	61472-93E40	LABEL, MAG COVER	1	
7	69711-93E10	LABEL (S.I.G.P.)	1	
8	61493-96J00	LABEL, CLEARANCE	1	
9	61494-87L00	LABEL, OIL	1	

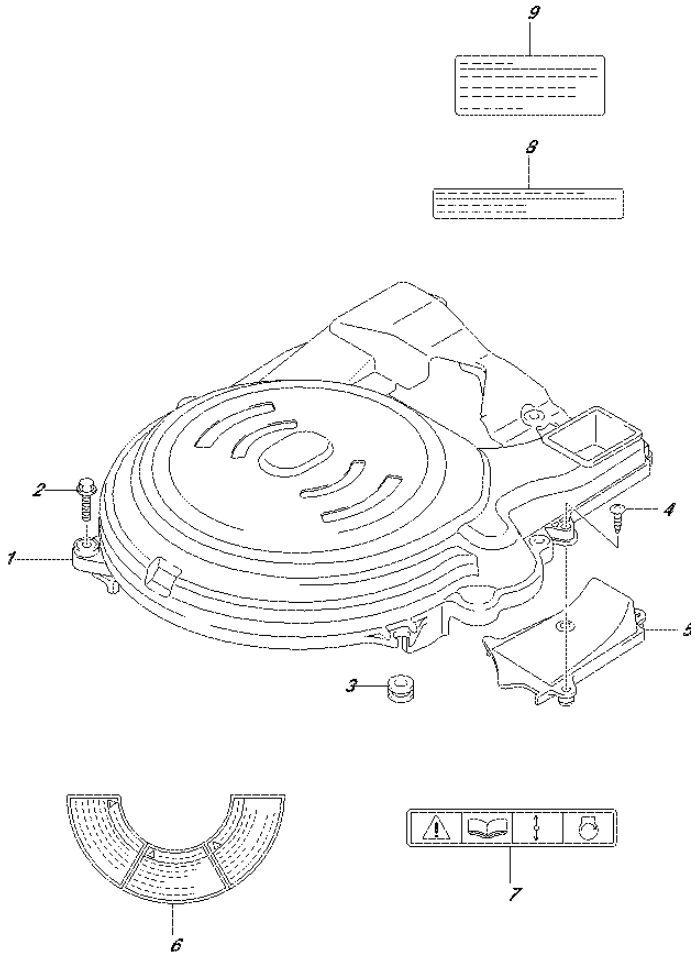

FIG.136K (1-D-9) RING GEAR COVER (DF90ATH E40)

REF NO.	PART NO.	DESCRIPTION	Q'TY	REMARKS
1	11510-87L02	COVER, RING GEAR	1	
2	01550-06307	BOLT	4	
3	09320-09016	CUSHION	1	
4	03542-06209	SCREW	2	
5	11514-87L00	PLATE, RING GEAR COVER	1	
6	61472-93E32	LABEL, MAG COVER	1	
7	69711-93E10	LABEL (S.I.G.P.)	1	
8	61493-96J00	LABEL, CLEARANCE	1	
9	61494-87L00	LABEL, OIL	1	

FIG.140A

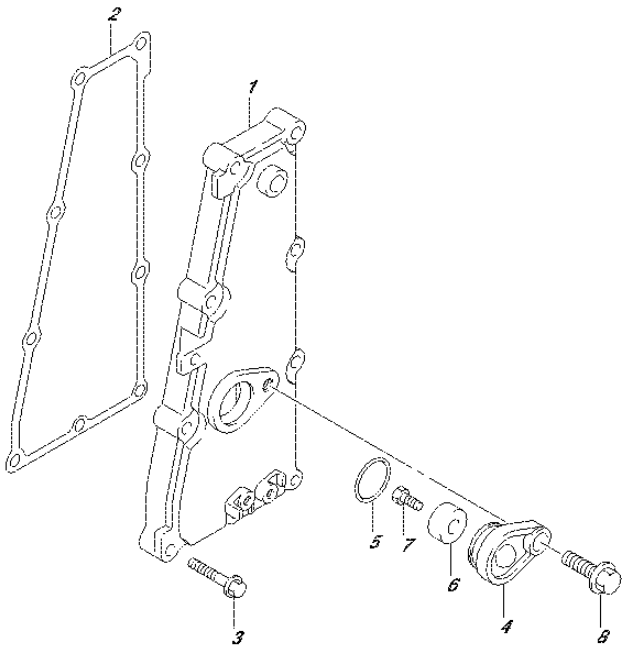

FIG.140A (1-D-10) EXHAUST COVER

REF NO.	PART NO.	DESCRIPTION	Q'TY	REMARKS
1	14141-87L00	COVER, EXHAUST	1	
2	14151-87L00	GASKET, EXHAUST COVER	1	
3	01550-06307	BOLT	9	
4	11261-93J00	COVER, PROTECTION ANODE	1	
5	09280-22019	O RING (D:1.9,ID:21.8)	1	
6	55321-87J00	ANODE, PROTECTION	1	
7	09103-06281	BOLT (6X14)	1	
8	01550-08207	BOLT	1	

FIG.143A

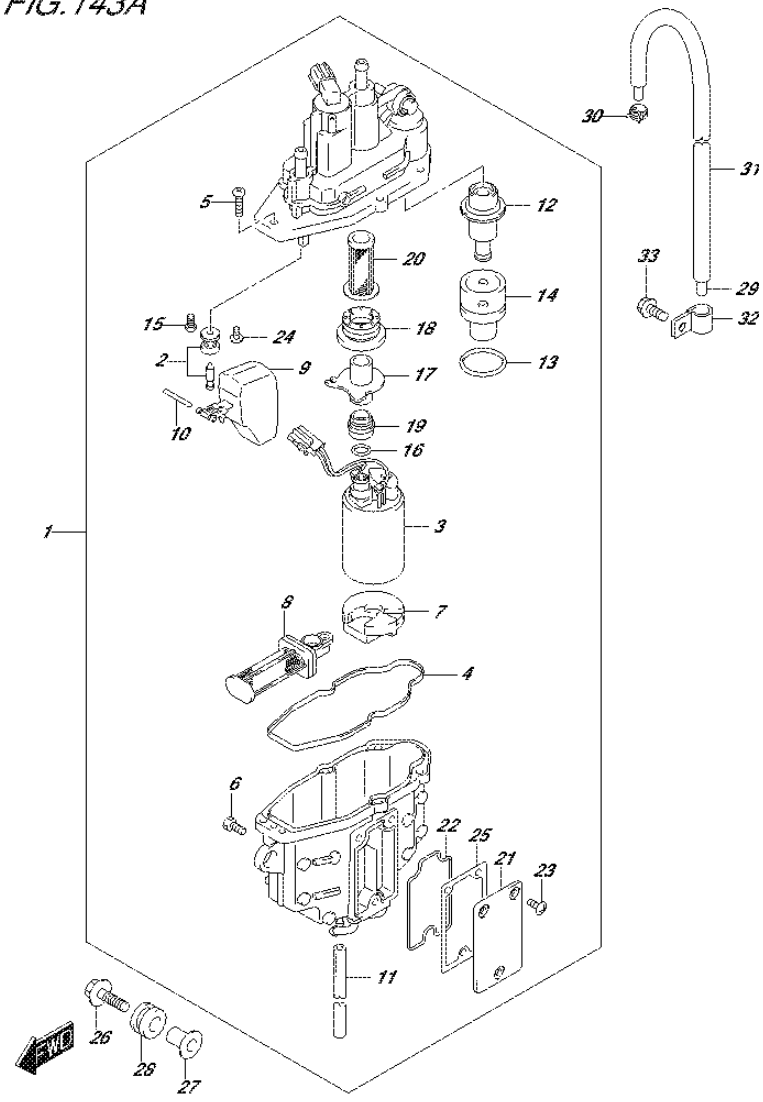

FIG.143A (1-D-11) FUEL VAPOR SEPARATOR (DF70A E01)

REF NO.	PART NO.	DESCRIPTION	Q'TY	REMARKS
1	15600-92J01	SEPARATOR ASSY, FUEL VAPOR	1	
2	13370-88L00	.VALVE ASSY, NEEDLE	1	
3	15200-92J00	.PUMP ASSY, FUEL	1	
4	15626-92J00	.SEAL	1	
5	15628-99E00	.SCREW (L:15)	5	
6	15629-99E10	.SCREW, DRAIN	1	
7	15641-88L00	.SPACER	1	
8	15642-88L00	.FILTER ASSY	1	
9	15650-99E00	.FLOAT	1	
10	15654-88L00	.PIN	1	
11	15683-87J00	.HOSE, DRAIN (L:120)	1	
12	15760-88L00	.REGULATOR ASSY	1	
13	15644-88L00	.O RING	1	
14	15645-88L00	.HOLDER, REGULATOR	1	
15	02112-0408A	.SCREW	1	
16	15648-92J00	.RING	1	
17	15643-88L00	.JOINT	1	
18	15641-88L20	.BUSH	1	
19	15641-88L40	.BUSH	1	
20	15642-88L10	.FILTER	1	
21	15612-88L00	.COVER	1	
22	15613-88L00	.O RING	1	
23	15614-88L00	.SCREW	3	
24	02142-0408B	.SCREW	1	
25	15613-92J00	.GASKET	1	
26	09116-06202	BOLT (6X25)	3	
27	09169-06090	WASHER	3	
28	09320-09053	CUSHION	3	
29	09352-50823-600	HOSE (5X8.2X600)	1	L:600->490
30	09401-08412	CLIP	1	
31	18498-87JC0	PROTECTOR, EVAP HOSE	1	L:450->390
32	09403-12320	CLAMP	1	
33	01550-06127	BOLT	1	

FIG.143B

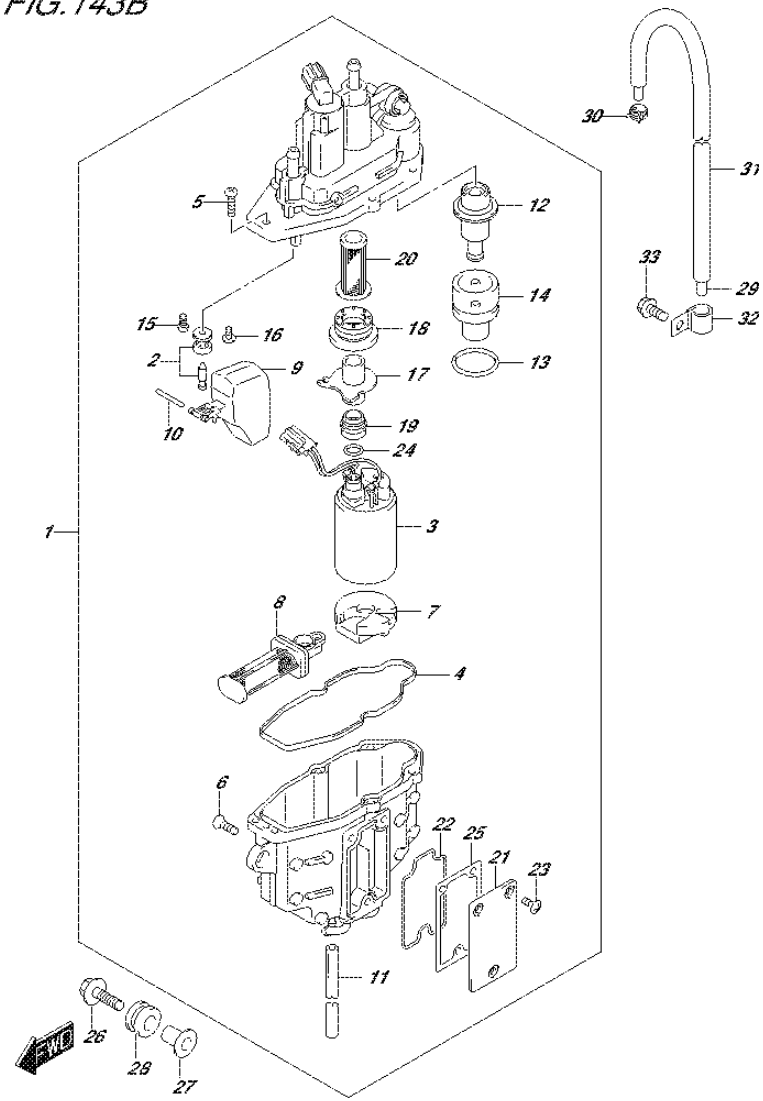

FIG.143B (1-D-12) FUEL VAPOR SEPARATOR (DF70A E40)

REF NO.	PART NO.	DESCRIPTION	Q'TY	REMARKS
1	15600-92J12	SEPARATOR ASSY, FUEL VAPOR	1	
2	13370-88L10	.VALVE ASSY, NEEDLE	1	
3	15200-92J10	.PUMP ASSY, FUEL	1	
4	15626-92J10	.SEAL	1	
5	15628-99E00	.SCREW (L:15)	5	
6	15629-99E10	.SCREW, DRAIN	1	
7	15641-88L10	.SPACER	1	
8	15642-88L00	.FILTER ASSY	1	
9	15650-99E00	.FLOAT	1	
10	15654-88L00	.PIN	1	
11	15683-87J00	.HOSE, DRAIN (L:120)	1	
12	15760-88L00	.REGULATOR ASSY	1	
13	15644-88L10	.O RING	1	
14	15645-88L00	.HOLDER, REGULATOR	1	
15	13614-89J00	.SCREW	1	
16	13614-93J00	.SCREW	1	
17	15643-88L00	.JOINT	1	
18	15641-88L31	.BUSH	1	
19	15641-88L51	.BUSH	1	
20	15642-88L10	.FILTER	1	
21	15612-88L00	.COVER	1	
22	15613-88L00	.O RING	1	
23	15614-88L00	.SCREW	3	
24	15648-92J00	.RING	1	
25	15613-92J00	.GASKET	1	
26	09116-06202	BOLT (6X25)	3	
27	09169-06090	WASHER	3	
28	09320-09053	CUSHION	3	
29	09352-50823-600	HOSE (5X8.2X600)	1	L:600->490
30	09401-08412	CLIP	1	
31	18498-87JC0	PROTECTOR, EVAP HOSE	1	L:450->390
32	09403-12320	CLAMP	1	
33	01550-06127	BOLT	1	

FIG.143C

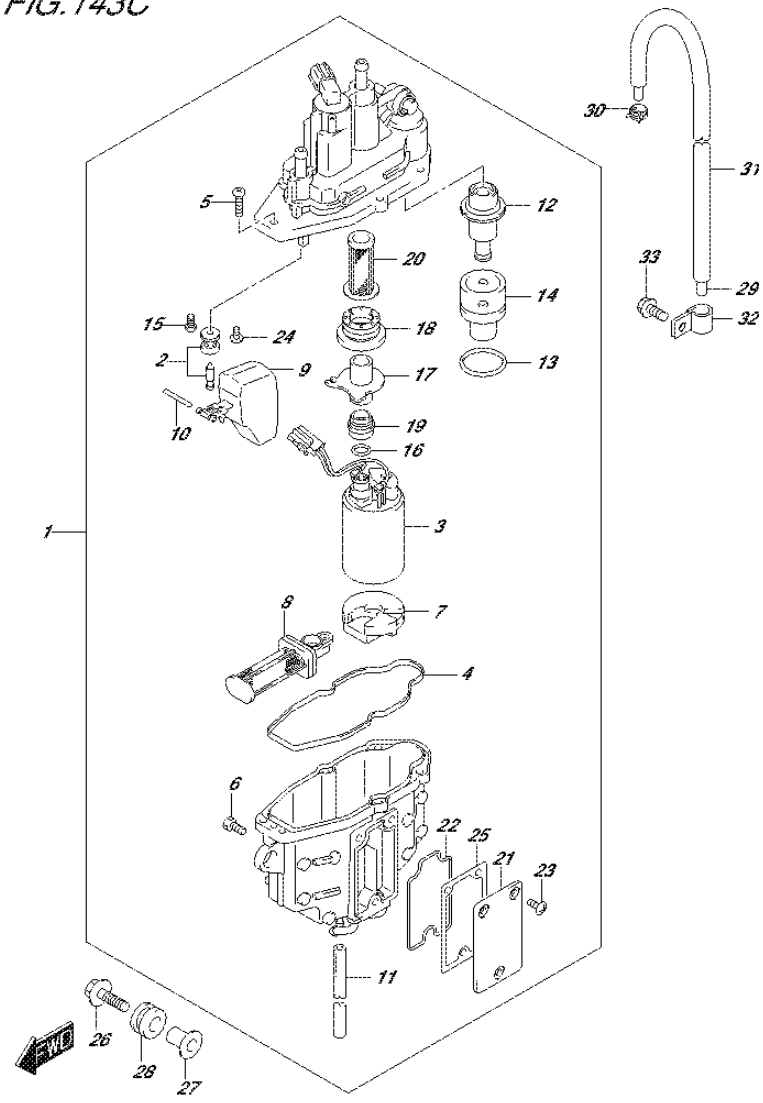

FIG.143C (1-D-13) FUEL VAPOR SEPARATOR (DF70ATH E01)

REF NO.	PART NO.	DESCRIPTION	Q'TY	REMARKS
1	15600-92J01	SEPARATOR ASSY, FUEL VAPOR	1	
2	13370-88L00	.VALVE ASSY, NEEDLE	1	
3	15200-92J00	.PUMP ASSY, FUEL	1	
4	15626-92J00	.SEAL	1	
5	15628-99E00	.SCREW (L:15)	5	
6	15629-99E10	.SCREW, DRAIN	1	
7	15641-88L00	.SPACER	1	
8	15642-88L00	.FILTER ASSY	1	
9	15650-99E00	.FLOAT	1	
10	15654-88L00	.PIN	1	
11	15683-87J00	.HOSE, DRAIN (L:120)	1	
12	15760-88L00	.REGULATOR ASSY	1	
13	15644-88L00	.O RING	1	
14	15645-88L00	.HOLDER, REGULATOR	1	
15	02112-0408A	.SCREW	1	
16	15648-92J00	.RING	1	
17	15643-88L00	.JOINT	1	
18	15641-88L20	.BUSH	1	
19	15641-88L40	.BUSH	1	
20	15642-88L10	.FILTER	1	
21	15612-88L00	.COVER	1	
22	15613-88L00	.O RING	1	
23	15614-88L00	.SCREW	3	
24	02142-0408B	.SCREW	1	
25	15613-92J00	.GASKET	1	
26	09116-06202	BOLT (6X25)	3	
27	09169-06090	WASHER	3	
28	09320-09053	CUSHION	3	
29	09352-50823-600	HOSE (5X8.2X600)	1	L:600->490
30	09401-08412	CLIP	1	
31	18498-87JC0	PROTECTOR, EVAP HOSE	1	L:450->390
32	09403-12320	CLAMP	1	
33	01550-06127	BOLT	1	

FIG.143D

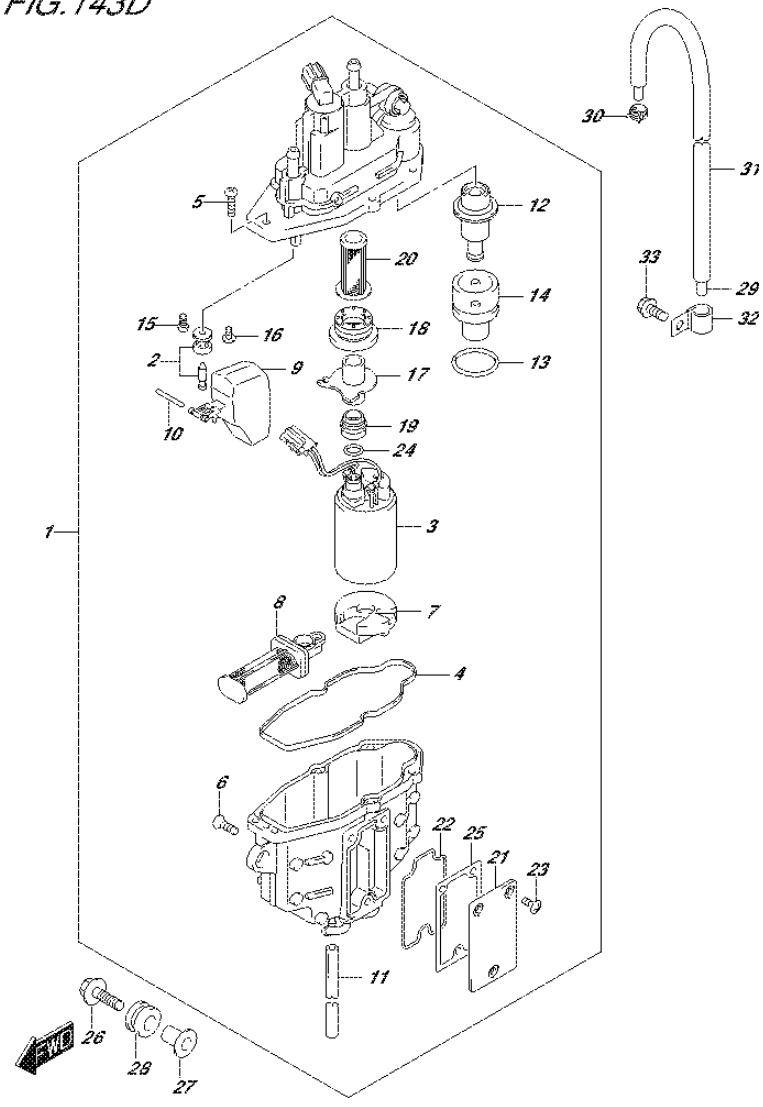

FIG.143D (1-D-14) FUEL VAPOR SEPARATOR (DF70ATH E40)

REF NO.	PART NO.	DESCRIPTION	Q'TY	REMARKS
1	15600-92J12	SEPARATOR ASSY, FUEL VAPOR	1	
2	13370-88L10	.VALVE ASSY, NEEDLE	1	
3	15200-92J10	.PUMP ASSY, FUEL	1	
4	15626-92J10	.SEAL	1	
5	15628-99E00	.SCREW (L:15)	5	
6	15629-99E10	.SCREW, DRAIN	1	
7	15641-88L10	.SPACER	1	
8	15642-88L00	.FILTER ASSY	1	
9	15650-99E00	.FLOAT	1	
10	15654-88L00	.PIN	1	
11	15683-87J00	.HOSE, DRAIN (L:120)	1	
12	15760-88L00	.REGULATOR ASSY	1	
13	15644-88L10	.O RING	1	
14	15645-88L00	.HOLDER, REGULATOR	1	
15	13614-89J00	.SCREW	1	
16	13614-93J00	.SCREW	1	
17	15643-88L00	.JOINT	1	
18	15641-88L31	.BUSH	1	
19	15641-88L51	.BUSH	1	
20	15642-88L10	.FILTER	1	
21	15612-88L00	.COVER	1	
22	15613-88L00	.O RING	1	
23	15614-88L00	.SCREW	3	
24	15648-92J00	.RING	1	
25	15613-92J00	.GASKET	1	
26	09116-06202	BOLT (6X25)	3	
27	09169-06090	WASHER	3	
28	09320-09053	CUSHION	3	
29	09352-50823-600	HOSE (5X8.2X600)	1	L:600->490
30	09401-08412	CLIP	1	
31	18498-87JC0	PROTECTOR, EVAP HOSE	1	L:450->390
32	09403-12320	CLAMP	1	
33	01550-06127	BOLT	1	

FIG.143E

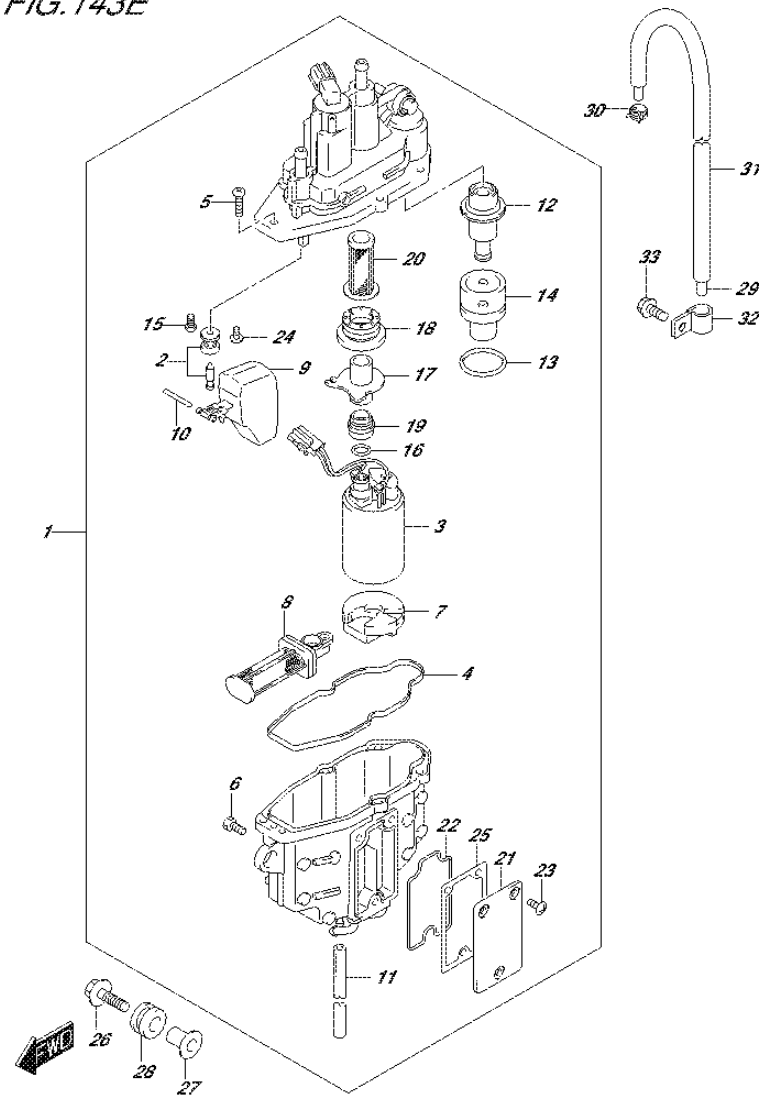

FIG.143E (1-D-15) FUEL VAPOR SEPARATOR (DF80A E01)

REF NO.	PART NO.	DESCRIPTION	Q'TY	REMARKS
1	15600-92J01	SEPARATOR ASSY, FUEL VAPOR	1	
2	13370-88L00	.VALVE ASSY, NEEDLE	1	
3	15200-92J00	.PUMP ASSY, FUEL	1	
4	15626-92J00	.SEAL	1	
5	15628-99E00	.SCREW (L:15)	5	
6	15629-99E10	.SCREW, DRAIN	1	
7	15641-88L00	.SPACER	1	
8	15642-88L00	.FILTER ASSY	1	
9	15650-99E00	.FLOAT	1	
10	15654-88L00	.PIN	1	
11	15683-87J00	.HOSE, DRAIN (L:120)	1	
12	15760-88L00	.REGULATOR ASSY	1	
13	15644-88L00	.O RING	1	
14	15645-88L00	.HOLDER, REGULATOR	1	
15	02112-0408A	.SCREW	1	
16	15648-92J00	.RING	1	
17	15643-88L00	.JOINT	1	
18	15641-88L20	.BUSH	1	
19	15641-88L40	.BUSH	1	
20	15642-88L10	.FILTER	1	
21	15612-88L00	.COVER	1	
22	15613-88L00	.O RING	1	
23	15614-88L00	.SCREW	3	
24	02142-0408B	.SCREW	1	
25	15613-92J00	.GASKET	1	
26	09116-06202	BOLT (6X25)	3	
27	09169-06090	WASHER	3	
28	09320-09053	CUSHION	3	
29	09352-50823-600	HOSE (5X8.2X600)	1	L:600->490
30	09401-08412	CLIP	1	
31	18498-87JC0	PROTECTOR, EVAP HOSE	1	L:450->390
32	09403-12320	CLAMP	1	
33	01550-06127	BOLT	1	

FIG.143F

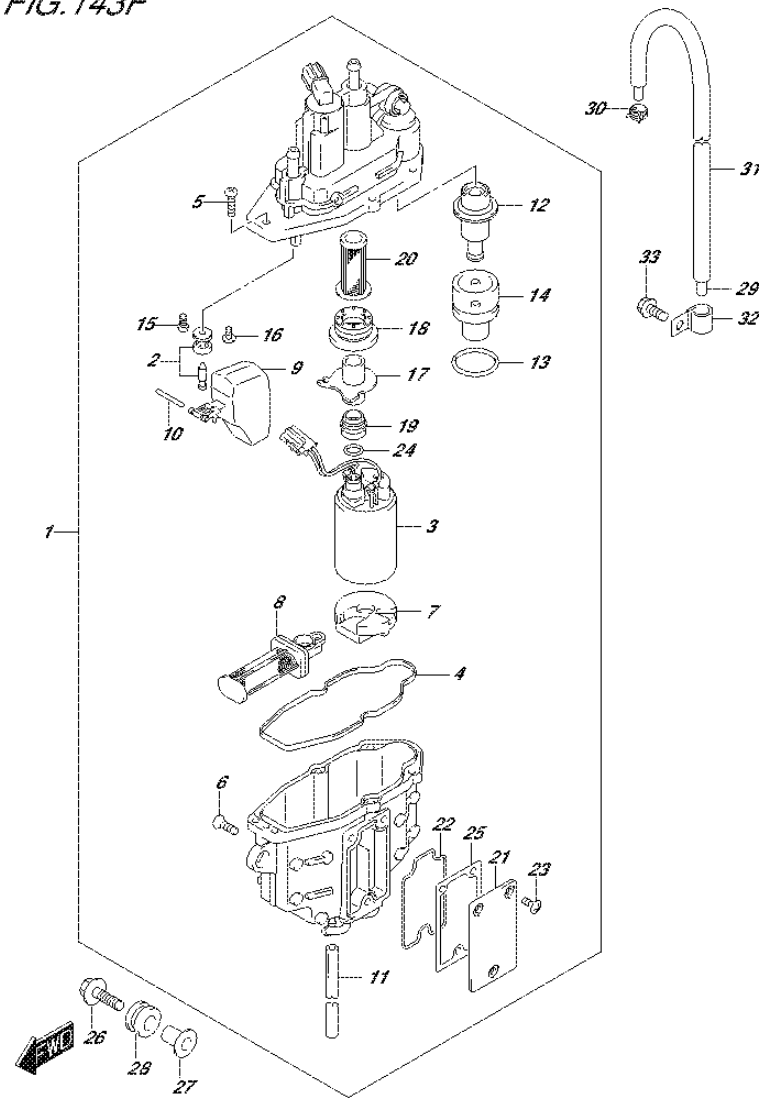

FIG.143F (1-E-2) FUEL VAPOR SEPARATOR (DF80A E40)

REF NO.	PART NO.	DESCRIPTION	Q'TY	REMARKS
1	15600-92J12	SEPARATOR ASSY, FUEL VAPOR	1	
2	13370-88L10	.VALVE ASSY, NEEDLE	1	
3	15200-92J10	.PUMP ASSY, FUEL	1	
4	15626-92J10	.SEAL	1	
5	15628-99E00	.SCREW (L:15)	5	
6	15629-99E10	.SCREW, DRAIN	1	
7	15641-88L10	.SPACER	1	
8	15642-88L00	.FILTER ASSY	1	
9	15650-99E00	.FLOAT	1	
10	15654-88L00	.PIN	1	
11	15683-87J00	.HOSE, DRAIN (L:120)	1	
12	15760-88L00	.REGULATOR ASSY	1	
13	15644-88L10	.O RING	1	
14	15645-88L00	.HOLDER, REGULATOR	1	
15	13614-89J00	.SCREW	1	
16	13614-93J00	.SCREW	1	
17	15643-88L00	.JOINT	1	
18	15641-88L31	.BUSH	1	
19	15641-88L51	.BUSH	1	
20	15642-88L10	.FILTER	1	
21	15612-88L00	.COVER	1	
22	15613-88L00	.O RING	1	
23	15614-88L00	.SCREW	3	
24	15648-92J00	.RING	1	
25	15613-92J00	.GASKET	1	
26	09116-06202	BOLT (6X25)	3	
27	09169-06090	WASHER	3	
28	09320-09053	CUSHION	3	
29	09352-50823-600	HOSE (5X8.2X600)	1	L:600->490
30	09401-08412	CLIP	1	
31	18498-87JC0	PROTECTOR, EVAP HOSE	1	L:450->390
32	09403-12320	CLAMP	1	
33	01550-06127	BOLT	1	

FIG.143G

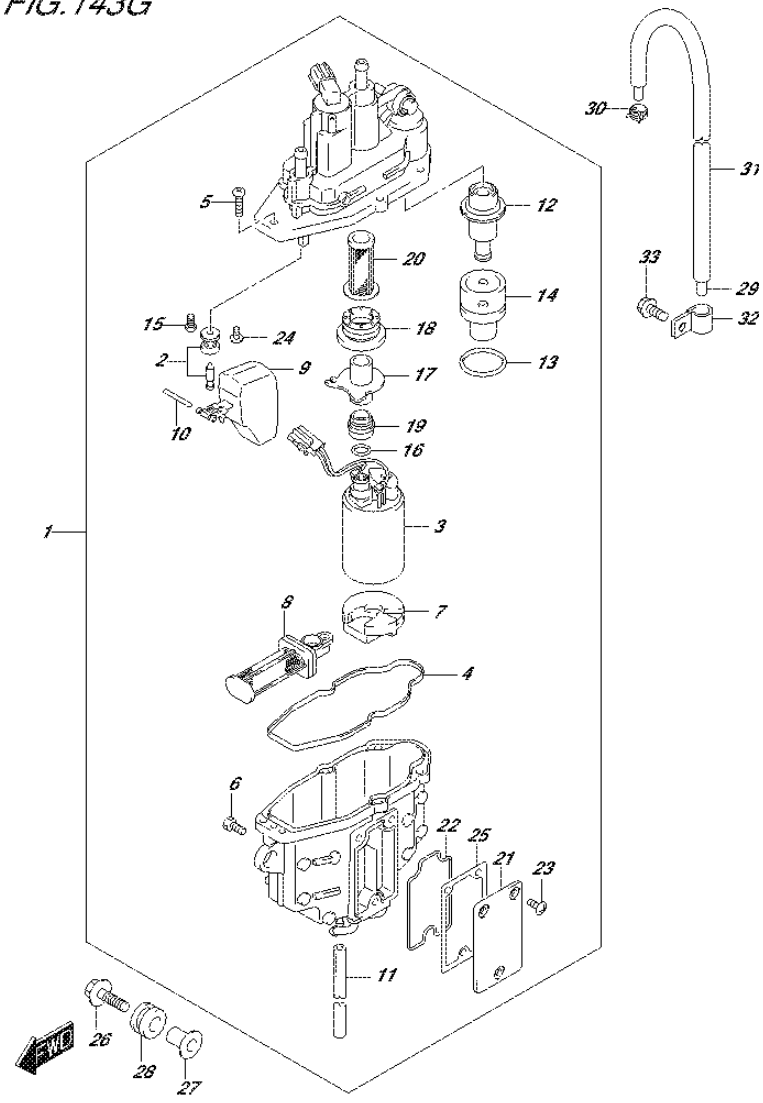

FIG.143G (1-E-3) FUEL VAPOR SEPARATOR (DF90A E01)

REF NO.	PART NO.	DESCRIPTION	Q'TY	REMARKS
1	15600-92J01	SEPARATOR ASSY, FUEL VAPOR	1	
2	13370-88L00	.VALVE ASSY, NEEDLE	1	
3	15200-92J00	.PUMP ASSY, FUEL	1	
4	15626-92J00	.SEAL	1	
5	15628-99E00	.SCREW (L:15)	5	
6	15629-99E10	.SCREW, DRAIN	1	
7	15641-88L00	.SPACER	1	
8	15642-88L00	.FILTER ASSY	1	
9	15650-99E00	.FLOAT	1	
10	15654-88L00	.PIN	1	
11	15683-87J00	.HOSE, DRAIN (L:120)	1	
12	15760-88L00	.REGULATOR ASSY	1	
13	15644-88L00	.O RING	1	
14	15645-88L00	.HOLDER, REGULATOR	1	
15	02112-0408A	.SCREW	1	
16	15648-92J00	.RING	1	
17	15643-88L00	.JOINT	1	
18	15641-88L20	.BUSH	1	
19	15641-88L40	.BUSH	1	
20	15642-88L10	.FILTER	1	
21	15612-88L00	.COVER	1	
22	15613-88L00	.O RING	1	
23	15614-88L00	.SCREW	3	
24	02142-0408B	.SCREW	1	
25	15613-92J00	.GASKET	1	
26	09116-06202	BOLT (6X25)	3	
27	09169-06090	WASHER	3	
28	09320-09053	CUSHION	3	
29	09352-50823-600	HOSE (5X8.2X600)	1	L:600->490
30	09401-08412	CLIP	1	
31	18498-87JC0	PROTECTOR, EVAP HOSE	1	L:450->390
32	09403-12320	CLAMP	1	
33	01550-06127	BOLT	1	

FIG.143H

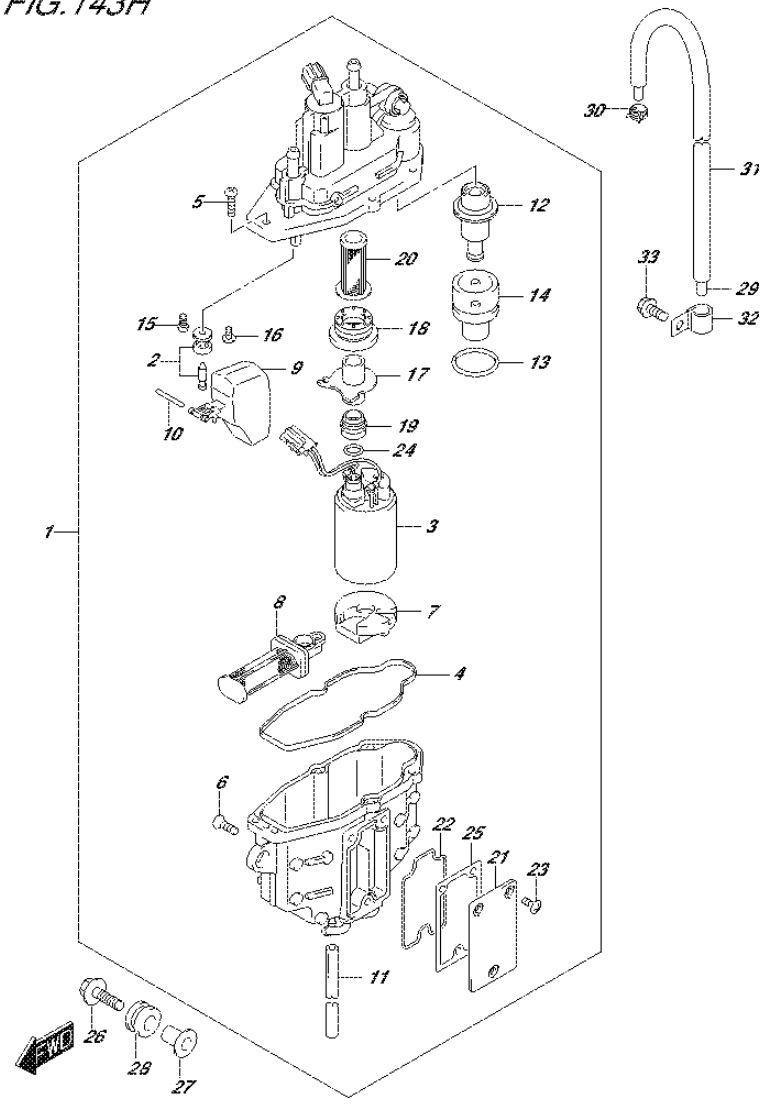

FIG.143H (1-E-4) FUEL VAPOR SEPARATOR (DF90A E40)

REF NO.	PART NO.	DESCRIPTION	Q'TY	REMARKS
1	15600-92J12	SEPARATOR ASSY, FUEL VAPOR	1	
2	13370-88L10	.VALVE ASSY, NEEDLE	1	
3	15200-92J10	.PUMP ASSY, FUEL	1	
4	15626-92J10	.SEAL	1	
5	15628-99E00	.SCREW (L:15)	5	
6	15629-99E10	.SCREW, DRAIN	1	
7	15641-88L10	.SPACER	1	
8	15642-88L00	.FILTER ASSY	1	
9	15650-99E00	.FLOAT	1	
10	15654-88L00	.PIN	1	
11	15683-87J00	.HOSE, DRAIN (L:120)	1	
12	15760-88L00	.REGULATOR ASSY	1	
13	15644-88L10	.O RING	1	
14	15645-88L00	.HOLDER, REGULATOR	1	
15	13614-89J00	.SCREW	1	
16	13614-93J00	.SCREW	1	
17	15643-88L00	.JOINT	1	
18	15641-88L31	.BUSH	1	
19	15641-88L51	.BUSH	1	
20	15642-88L10	.FILTER	1	
21	15612-88L00	.COVER	1	
22	15613-88L00	.O RING	1	
23	15614-88L00	.SCREW	3	
24	15648-92J00	.RING	1	
25	15613-92J00	.GASKET	1	
26	09116-06202	BOLT (6X25)	3	
27	09169-06090	WASHER	3	
28	09320-09053	CUSHION	3	
29	09352-50823-600	HOSE (5X8.2X600)	1	L:600->490
30	09401-08412	CLIP	1	
31	18498-87JC0	PROTECTOR, EVAP HOSE	1	L:450->390
32	09403-12320	CLAMP	1	
33	01550-06127	BOLT	1	

FIG.143J

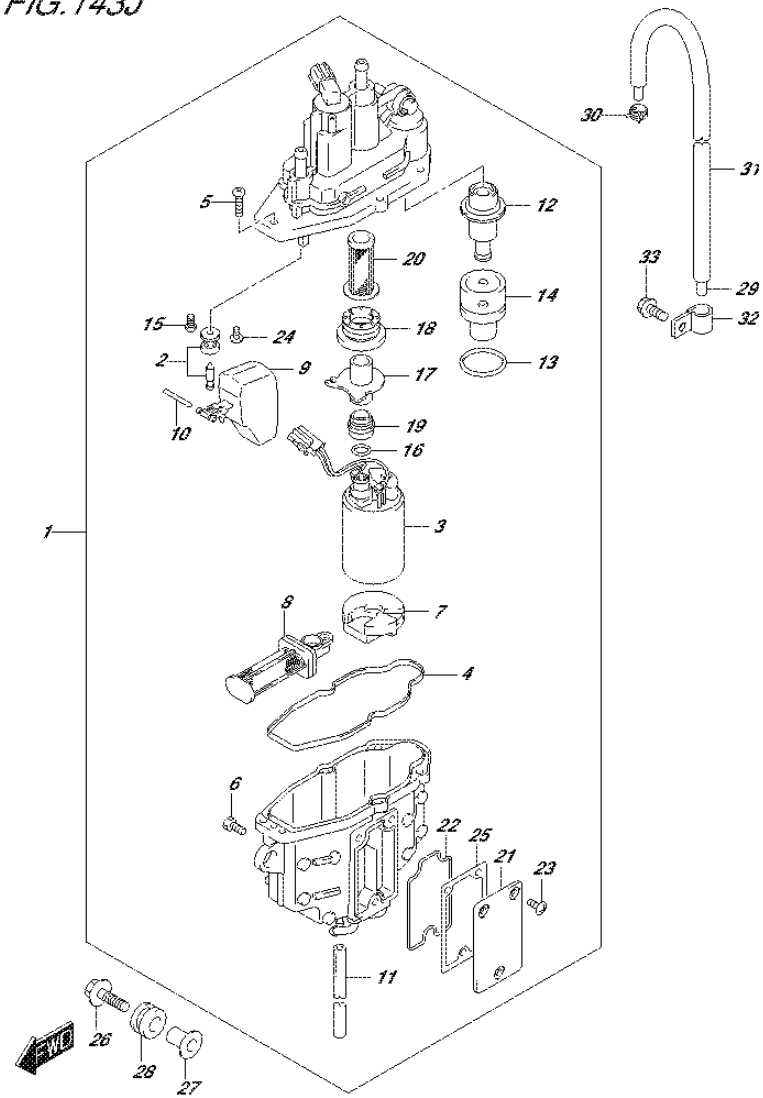

FIG.143J (1-E-5) FUEL VAPOR SEPARATOR (DF90ATH E01)

REF NO.	PART NO.	DESCRIPTION	Q'TY	REMARKS
1	15600-92J01	SEPARATOR ASSY, FUEL VAPOR	1	
2	13370-88L00	.VALVE ASSY, NEEDLE	1	
3	15200-92J00	.PUMP ASSY, FUEL	1	
4	15626-92J00	.SEAL	1	
5	15628-99E00	.SCREW (L:15)	5	
6	15629-99E10	.SCREW, DRAIN	1	
7	15641-88L00	.SPACER	1	
8	15642-88L00	.FILTER ASSY	1	
9	15650-99E00	.FLOAT	1	
10	15654-88L00	.PIN	1	
11	15683-87J00	.HOSE, DRAIN (L:120)	1	
12	15760-88L00	.REGULATOR ASSY	1	
13	15644-88L00	.O RING	1	
14	15645-88L00	.HOLDER, REGULATOR	1	
15	02112-0408A	.SCREW	1	
16	15648-92J00	.RING	1	
17	15643-88L00	.JOINT	1	
18	15641-88L20	.BUSH	1	
19	15641-88L40	.BUSH	1	
20	15642-88L10	.FILTER	1	
21	15612-88L00	.COVER	1	
22	15613-88L00	.O RING	1	
23	15614-88L00	.SCREW	3	
24	02142-0408B	.SCREW	1	
25	15613-92J00	.GASKET	1	
26	09116-06202	BOLT (6X25)	3	
27	09169-06090	WASHER	3	
28	09320-09053	CUSHION	3	
29	09352-50823-600	HOSE (5X8.2X600)	1	L:600->490
30	09401-08412	CLIP	1	
31	18498-87JC0	PROTECTOR, EVAP HOSE	1	L:450->390
32	09403-12320	CLAMP	1	
33	01550-06127	BOLT	1	

FIG.143K

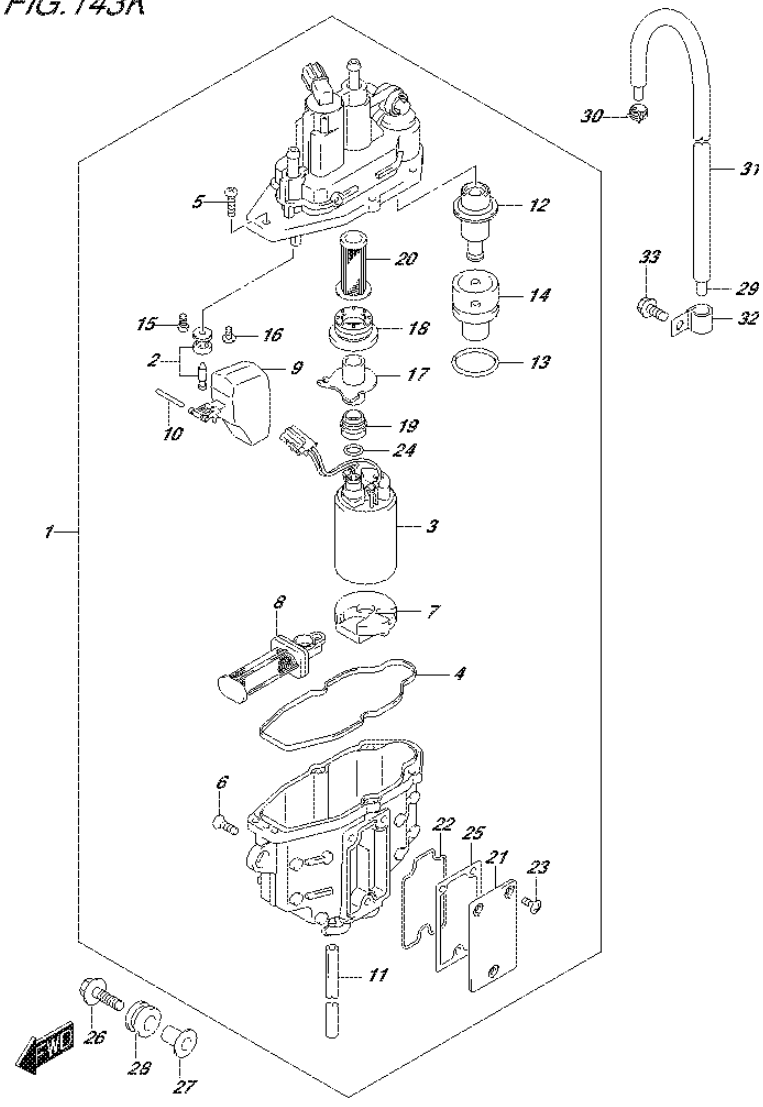

FIG.143K (1-E-6) FUEL VAPOR SEPARATOR (DF90ATH E40)

REF NO.	PART NO.	DESCRIPTION	Q'TY	REMARKS
1	15600-92J12	SEPARATOR ASSY, FUEL VAPOR	1	
2	13370-88L10	.VALVE ASSY, NEEDLE	1	
3	15200-92J10	.PUMP ASSY, FUEL	1	
4	15626-92J10	.SEAL	1	
5	15628-99E00	.SCREW (L:15)	5	
6	15629-99E10	.SCREW, DRAIN	1	
7	15641-88L10	.SPACER	1	
8	15642-88L00	.FILTER ASSY	1	
9	15650-99E00	.FLOAT	1	
10	15654-88L00	.PIN	1	
11	15683-87J00	.HOSE, DRAIN (L:120)	1	
12	15760-88L00	.REGULATOR ASSY	1	
13	15644-88L10	.O RING	1	
14	15645-88L00	.HOLDER, REGULATOR	1	
15	13614-89J00	.SCREW	1	
16	13614-93J00	.SCREW	1	
17	15643-88L00	.JOINT	1	
18	15641-88L31	.BUSH	1	
19	15641-88L51	.BUSH	1	
20	15642-88L10	.FILTER	1	
21	15612-88L00	.COVER	1	
22	15613-88L00	.O RING	1	
23	15614-88L00	.SCREW	3	
24	15648-92J00	.RING	1	
25	15613-92J00	.GASKET	1	
26	09116-06202	BOLT (6X25)	3	
27	09169-06090	WASHER	3	
28	09320-09053	CUSHION	3	
29	09352-50823-600	HOSE (5X8.2X600)	1	L:600->490
30	09401-08412	CLIP	1	
31	18498-87JC0	PROTECTOR, EVAP HOSE	1	L:450->390
32	09403-12320	CLAMP	1	
33	01550-06127	BOLT	1	

FIG.144A

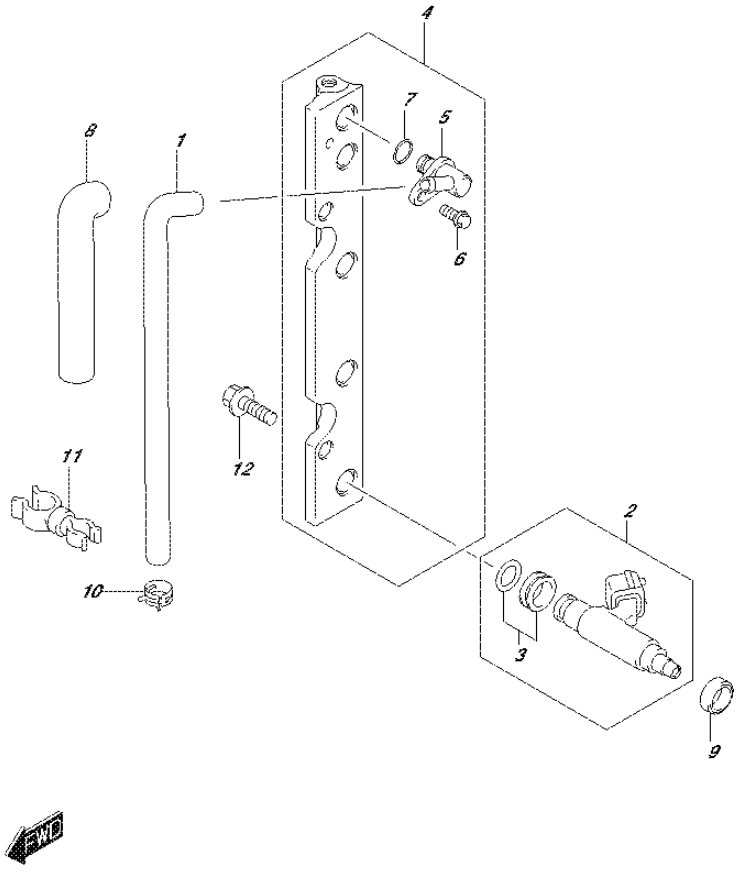

FIG.144A (1-E-7) FUEL INJECTOR (DF70A E01)

REF NO.	PART NO.	DESCRIPTION	Q'TY	REMARKS
1	15681-92J00	HOSE, FUEL (SEPARATOR TO DLVY)	1	
2	15710-82K50	INJECTOR ASSY, FUEL	4	
3	15716-65DT0	.GROMMET SET, FUEL INJECTOR	4	
4	15750-87L30	PIPE, DELIVERY	1	
5	15830-87L30	.JOINT, FUEL MAIN	1	
6	09103-06281	.BOLT (6X14)	1	
7	09280-08012	.O RING (D:1.9,ID:7.8)	1	
8	18498-99E20	PROTECTOR, FUEL HOSE (L:450)	1	L:450->160
9	09320-08062	CUSHION	4	
10	09401-11425	CLIP	2	
11	09408-00233	CLAMP	1	
12	01550-08257	BOLT	2	

FIG.144B

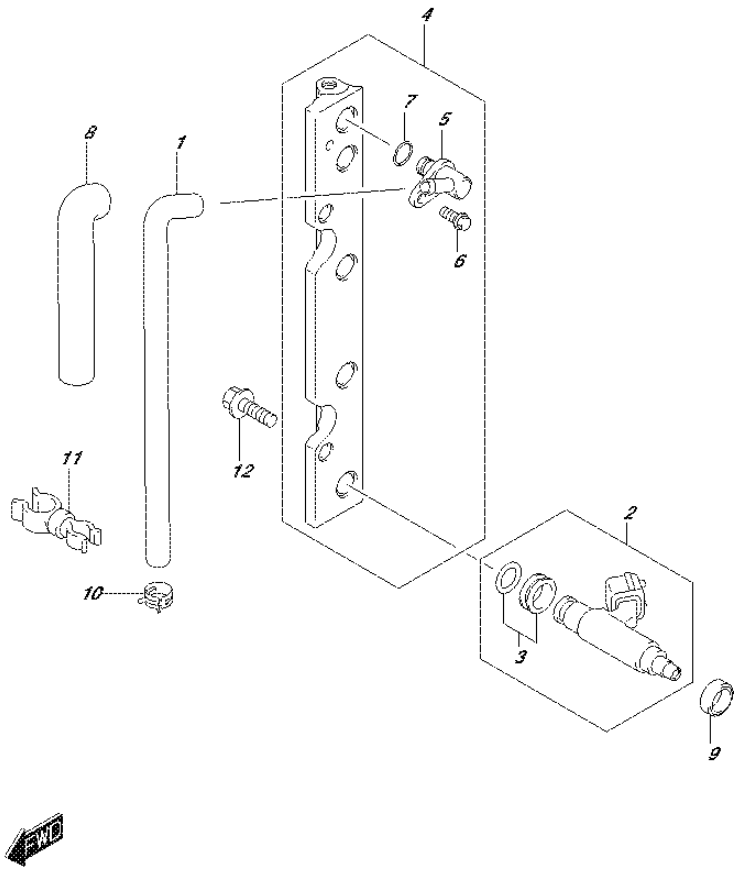

FIG.144B (1-E-8) FUEL INJECTOR (DF70A E40)

REF NO.	PART NO.	DESCRIPTION	Q'TY	REMARKS
1	15681-92J00	HOSE, FUEL (SEPARATOR TO DLVY)	1	
2	15710-82K50	INJECTOR ASSY, FUEL	4	
3	15716-65DT0	.GROMMET SET, FUEL INJECTOR	4	
4	15750-87L40	PIPE, DELIVERY	1	
5	15830-87L40	.JOINT, FUEL MAIN	1	
6	09103-06281	.BOLT (6X14)	1	
7	09280-08012	.O RING (D:1.9,ID:7.8)	1	
8	18498-99E20	PROTECTOR, FUEL HOSE (L:450)	1	L:450->160
9	09320-08062	CUSHION	4	
10	09401-11425	CLIP	2	
11	09408-00233	CLAMP	1	
12	01550-08257	BOLT	2	

FIG.144C

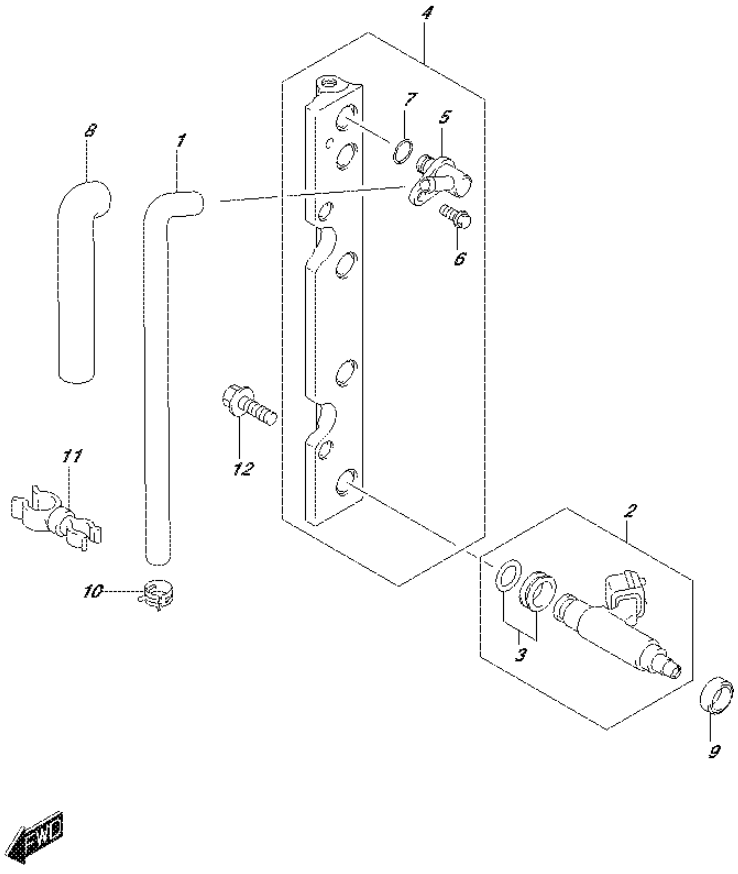

FIG.144C (1-E-9) FUEL INJECTOR (DF70ATH E01)

REF NO.	PART NO.	DESCRIPTION	Q'TY	REMARKS
1	15681-92J00	HOSE, FUEL (SEPARATOR TO DLVY)	1	
2	15710-82K50	INJECTOR ASSY, FUEL	4	
3	15716-65DT0	.GROMMET SET, FUEL INJECTOR	4	
4	15750-87L30	PIPE, DELIVERY	1	
5	15830-87L30	.JOINT, FUEL MAIN	1	
6	09103-06281	.BOLT (6X14)	1	
7	09280-08012	.O RING (D:1.9,ID:7.8)	1	
8	18498-99E20	PROTECTOR, FUEL HOSE (L:450)	1	L:450->160
9	09320-08062	CUSHION	4	
10	09401-11425	CLIP	2	
11	09408-00233	CLAMP	1	
12	01550-08257	BOLT	2	

FIG.144D

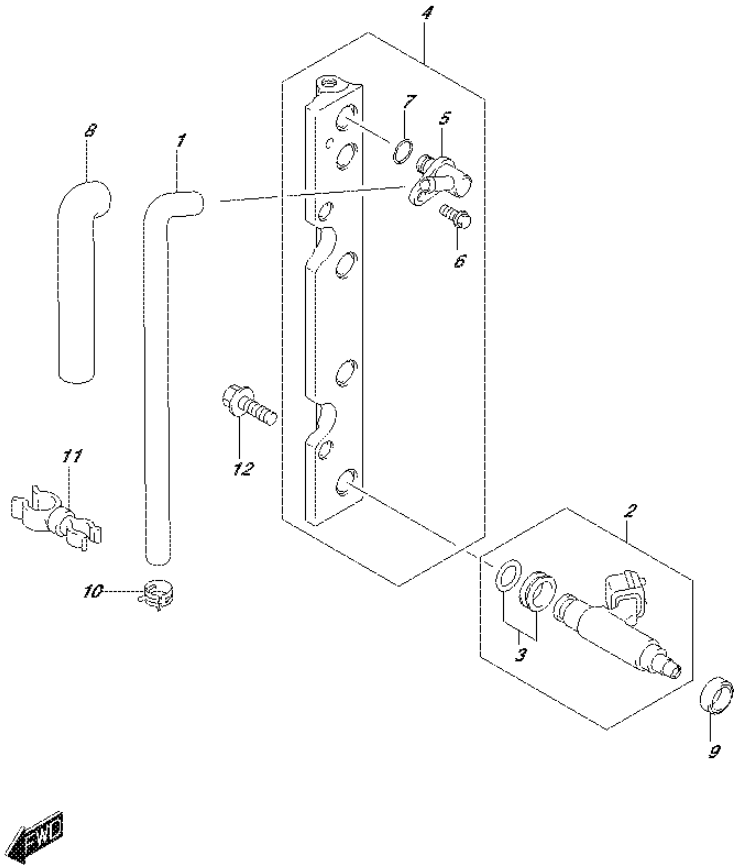

FIG.144D (1-E-10) FUEL INJECTOR (DF70ATH E40)

REF NO.	PART NO.	DESCRIPTION	Q'TY	REMARKS
1	15681-92J00	HOSE, FUEL (SEPARATOR TO DLVY)	1	
2	15710-82K50	INJECTOR ASSY, FUEL	4	
3	15716-65DT0	.GROMMET SET, FUEL INJECTOR	4	
4	15750-87L40	PIPE, DELIVERY	1	
5	15830-87L40	.JOINT, FUEL MAIN	1	
6	09103-06281	.BOLT (6X14)	1	
7	09280-08012	.O RING (D:1.9,ID:7.8)	1	
8	18498-99E20	PROTECTOR, FUEL HOSE (L:450)	1	L:450->160
9	09320-08062	CUSHION	4	
10	09401-11425	CLIP	2	
11	09408-00233	CLAMP	1	
12	01550-08257	BOLT	2	

FIG.144E

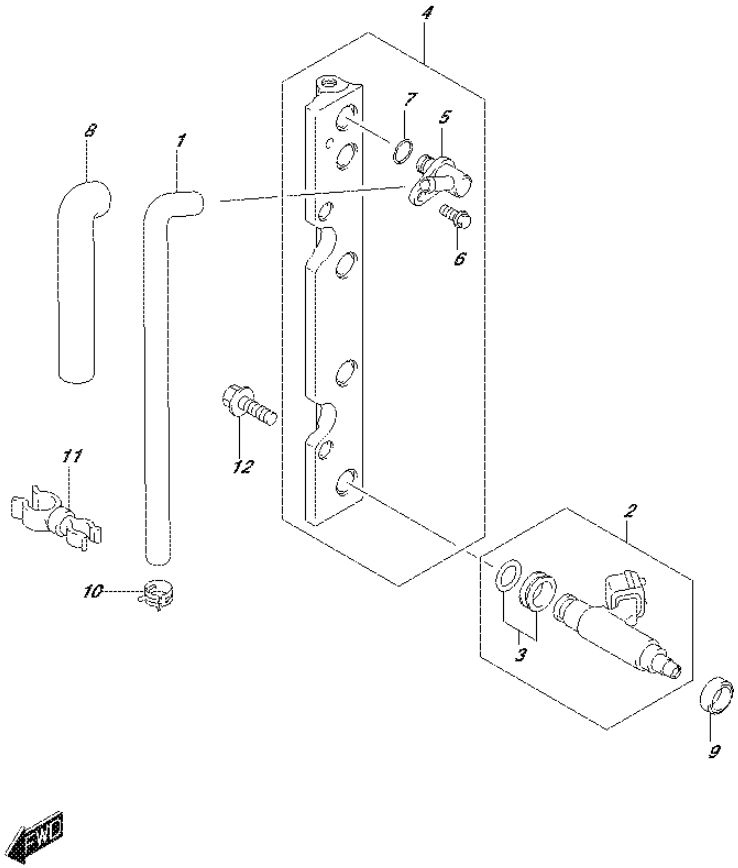

FIG.144E (1-E-11) FUEL INJECTOR (DF80A E01)

REF NO.	PART NO.	DESCRIPTION	Q'TY	REMARKS
1	15681-92J00	HOSE, FUEL (SEPARATOR TO DLVY)	1	
2	15710-82K50	INJECTOR ASSY, FUEL	4	
3	15716-65DT0	.GROMMET SET, FUEL INJECTOR	4	
4	15750-87L30	PIPE, DELIVERY	1	
5	15830-87L30	.JOINT, FUEL MAIN	1	
6	09103-06281	.BOLT (6X14)	1	
7	09280-08012	.O RING (D:1.9,ID:7.8)	1	
8	18498-99E20	PROTECTOR, FUEL HOSE (L:450)	1	L:450->160
9	09320-08062	CUSHION	4	
10	09401-11425	CLIP	2	
11	09408-00233	CLAMP	1	
12	01550-08257	BOLT	2	

FIG.144F

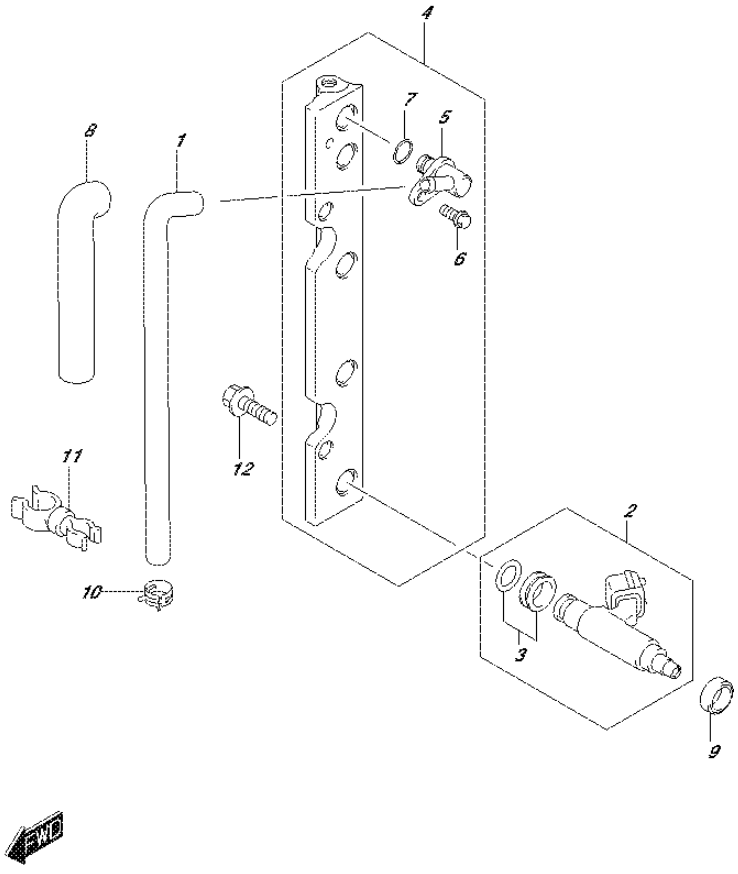

FIG.144F (1-E-12) FUEL INJECTOR (DF80A E40)

REF NO.	PART NO.	DESCRIPTION	Q'TY	REMARKS
1	15681-92J00	HOSE, FUEL (SEPARATOR TO DLVY)	1	
2	15710-82K50	INJECTOR ASSY, FUEL	4	
3	15716-65DT0	.GROMMET SET, FUEL INJECTOR	4	
4	15750-87L40	PIPE, DELIVERY	1	
5	15830-87L40	.JOINT, FUEL MAIN	1	
6	09103-06281	.BOLT (6X14)	1	
7	09280-08012	.O RING (D:1.9,ID:7.8)	1	
8	18498-99E20	PROTECTOR, FUEL HOSE (L:450)	1	L:450->160
9	09320-08062	CUSHION	4	
10	09401-11425	CLIP	2	
11	09408-00233	CLAMP	1	
12	01550-08257	BOLT	2	

FIG.144G

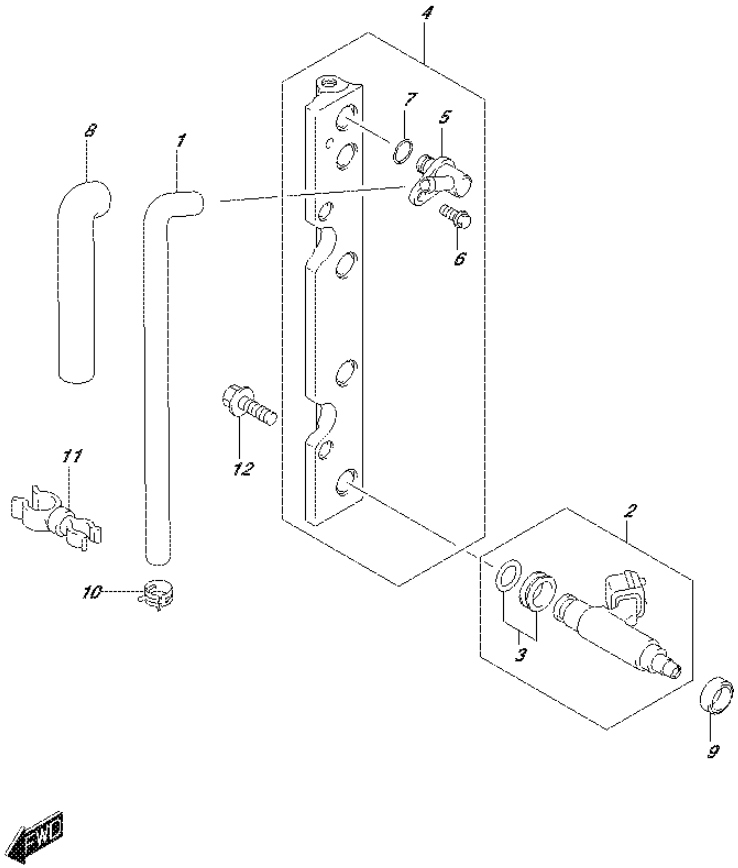

FIG.144G (1-E-13) FUEL INJECTOR (DF90A E01)

REF NO.	PART NO.	DESCRIPTION	Q'TY	REMARKS
1	15681-92J00	HOSE, FUEL (SEPARATOR TO DLVY)	1	
2	15710-82K50	INJECTOR ASSY, FUEL	4	
3	15716-65DT0	.GROMMET SET, FUEL INJECTOR	4	
4	15750-87L30	PIPE, DELIVERY	1	
5	15830-87L30	.JOINT, FUEL MAIN	1	
6	09103-06281	.BOLT (6X14)	1	
7	09280-08012	.O RING (D:1.9,ID:7.8)	1	
8	18498-99E20	PROTECTOR, FUEL HOSE (L:450)	1	L:450->160
9	09320-08062	CUSHION	4	
10	09401-11425	CLIP	2	
11	09408-00233	CLAMP	1	
12	01550-08257	BOLT	2	

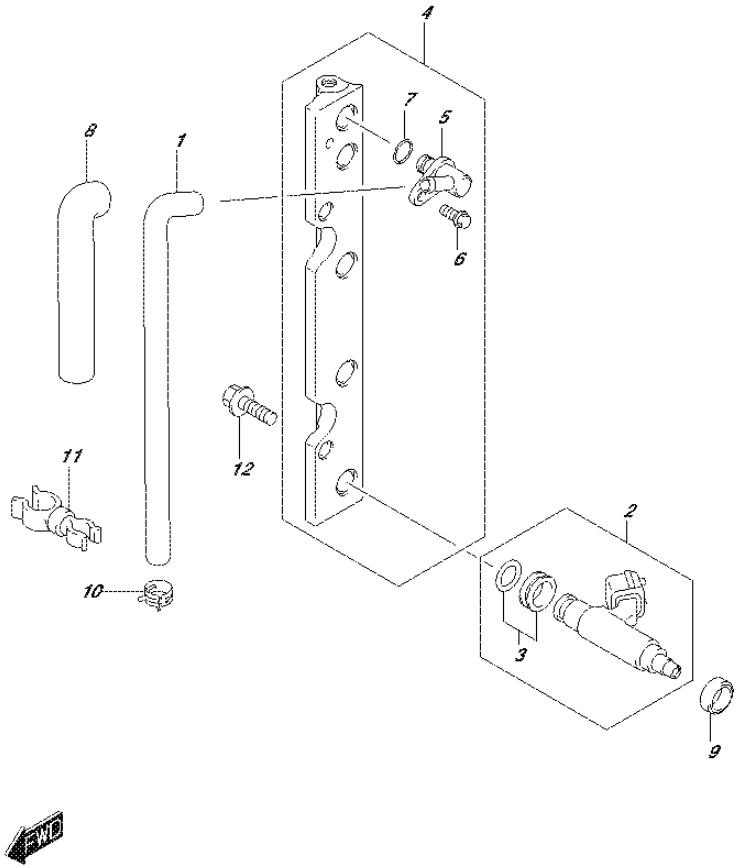

FIG.144H (1-E-14) FUEL INJECTOR (DF90A E40)

REF NO.	PART NO.	DESCRIPTION	Q'TY	REMARKS
1	15681-92J00	HOSE, FUEL (SEPARATOR TO DLVY)	1	
2	15710-82K50	INJECTOR ASSY, FUEL	4	
3	15716-65DT0	.GROMMET SET, FUEL INJECTOR	4	
4	15750-87L40	PIPE, DELIVERY	1	
5	15830-87L40	.JOINT, FUEL MAIN	1	
6	09103-06281	.BOLT (6X14)	1	
7	09280-08012	.O RING (D:1.9,ID:7.8)	1	
8	18498-99E20	PROTECTOR, FUEL HOSE (L:450)	1	L:450->160
9	09320-08062	CUSHION	4	
10	09401-11425	CLIP	2	
11	09408-00233	CLAMP	1	
12	01550-08257	BOLT	2	

FIG.144J

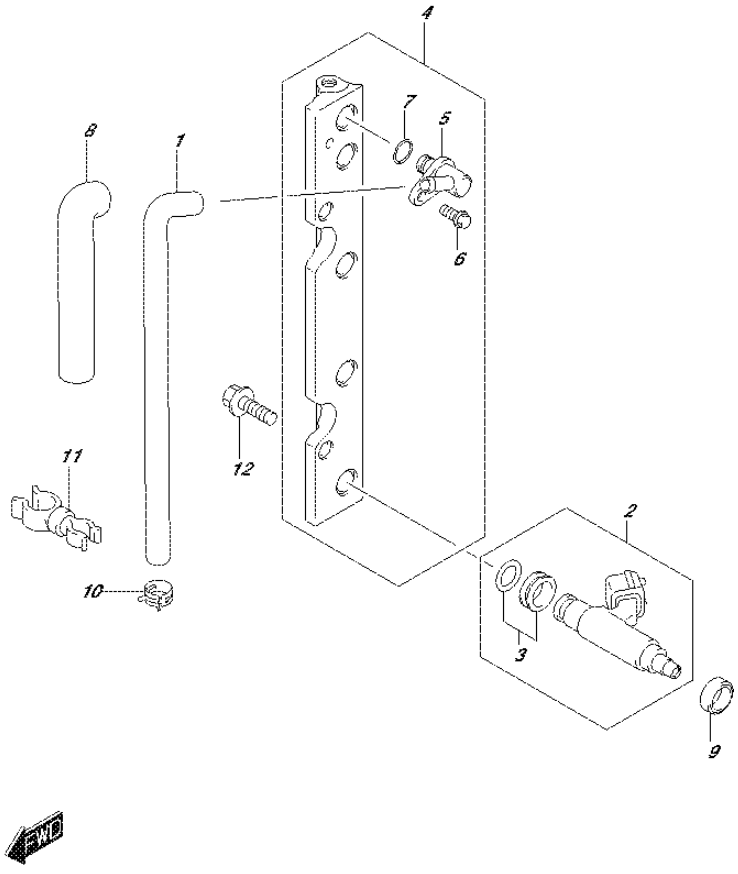

FIG.144J (1-E-15) FUEL INJECTOR (DF90ATH E01)

REF NO.	PART NO.	DESCRIPTION	Q'TY	REMARKS
1	15681-92J00	HOSE, FUEL (SEPARATOR TO DLVY)	1	
2	15710-82K50	INJECTOR ASSY, FUEL	4	
3	15716-65DT0	.GROMMET SET, FUEL INJECTOR	4	
4	15750-87L30	PIPE, DELIVERY	1	
5	15830-87L30	.JOINT, FUEL MAIN	1	
6	09103-06281	.BOLT (6X14)	1	
7	09280-08012	.O RING (D:1.9,ID:7.8)	1	
8	18498-99E20	PROTECTOR, FUEL HOSE (L:450)	1	L:450->160
9	09320-08062	CUSHION	4	
10	09401-11425	CLIP	2	
11	09408-00233	CLAMP	1	
12	01550-08257	BOLT	2	

FIG.144K

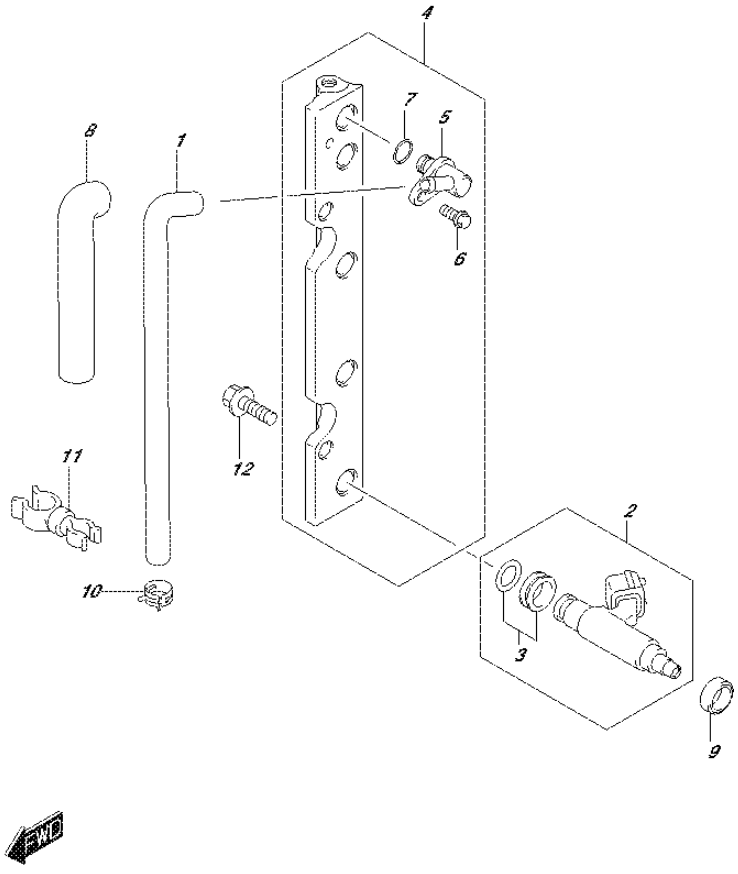

FIG.144K (1-F-2) FUEL INJECTOR (DF90ATH E40)

REF NO.	PART NO.	DESCRIPTION	Q'TY	REMARKS
1	15681-92J00	HOSE, FUEL (SEPARATOR TO DLVY)	1	
2	15710-82K50	INJECTOR ASSY, FUEL	4	
3	15716-65DT0	.GROMMET SET, FUEL INJECTOR	4	
4	15750-87L40	PIPE, DELIVERY	1	
5	15830-87L40	.JOINT, FUEL MAIN	1	
6	09103-06281	.BOLT (6X14)	1	
7	09280-08012	.O RING (D:1.9,ID:7.8)	1	
8	18498-99E20	PROTECTOR, FUEL HOSE (L:450)	1	L:450->160
9	09320-08062	CUSHION	4	
10	09401-11425	CLIP	2	
11	09408-00233	CLAMP	1	
12	01550-08257	BOLT	2	

FIG.146A

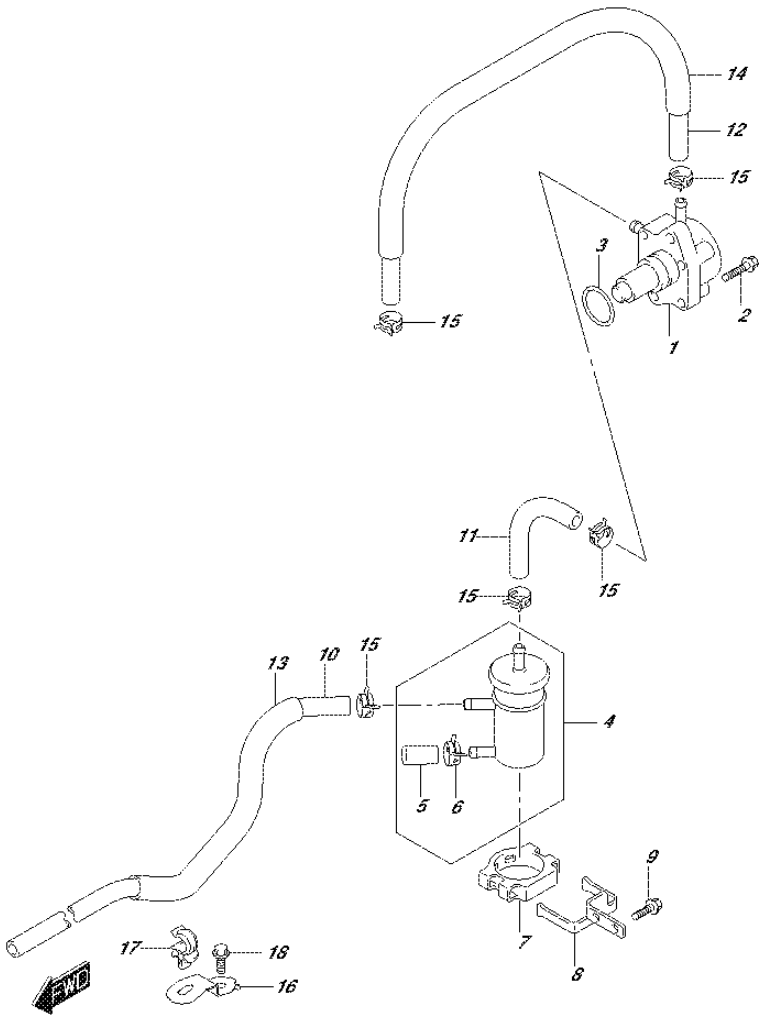

FIG.146A (1-F-3) FUEL PUMP

REF NO.	PART NO.	DESCRIPTION	Q'TY	REMARKS
1	15100-90J11	PUMP ASSY, FUEL	1	
2	01550-06257	BOLT	2	
3	09280-26005	O RING (D:2.4,ID:26.2)	1	
4	15410-87L00	FILTER, FUEL	1	
5	15419-87J00	.CAP, FUEL FILTER	1	
6	09401-11423	.CLIP	1	
7	15422-96J00	CLAMP, FILTER	1	
8	15421-87L00	BRACKET, FUEL FILTER	1	
9	01550-06167	BOLT	2	
10	15190-90J30	HOSE, FUEL (JOINT TO FILTER)	1	
11	15192-87L11	HOSE, FUEL (FILTER TO PUMP)	1	
12	09343-70503-600	HOSE (7X12X600)	1	L:600->510
13	18498-99E10	PROTECTOR, FUEL HOSE (L:610)	1	L:610->340
14	18498-99E10	PROTECTOR, FUEL HOSE (L:610)	1	L:610->450
15	09401-11423	CLIP	5	
16	15198-87L00	BRACKET, FUEL HOSE	1	
17	09403-11320	CLAMP	1	
18	01550-06127	BOLT	1	

FIG.160A

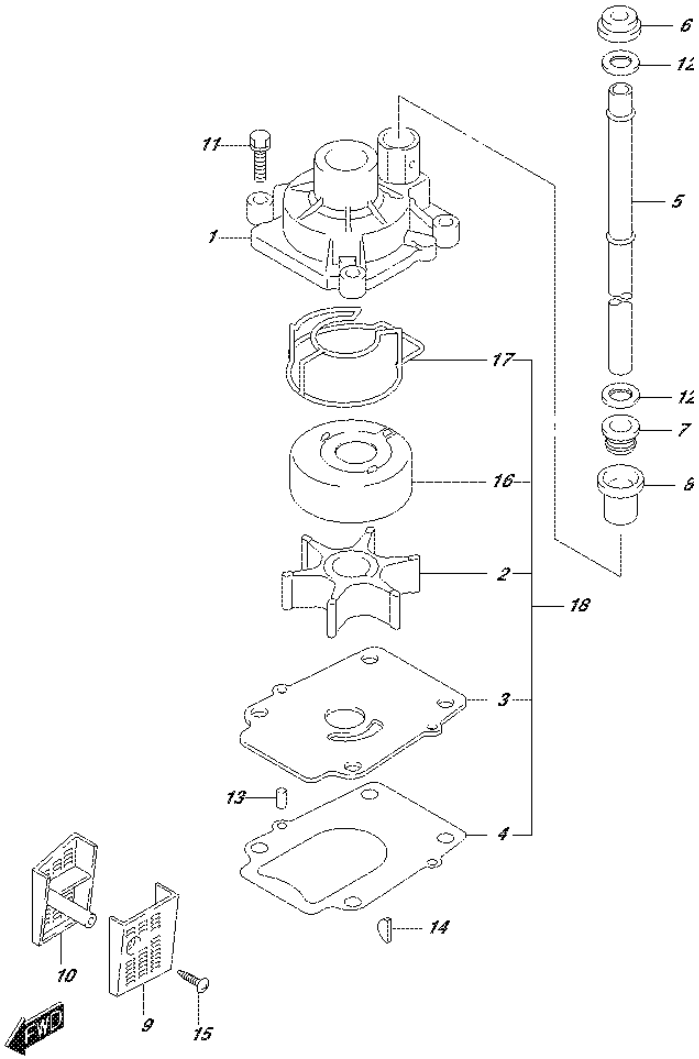

FIG.160A (1-F-4) WATER PUMP (DF70A E01)

REF NO.	PART NO.	DESCRIPTION	Q'TY	REMARKS
1	17410-99E10	CASE, WATER PUMP	1	
2	17461-87E12	IMPELLER, WATER PUMP	1	
3	17471-87L00	PANEL, PUMP CASE UNDER	1	
4	17472-87L00	GASKET, PUMP CASE PANEL	1	
5-1	17561-87L20	TUBE, WATER (L)	1	W/TRANSOM(L)
5-2	17561-87L30	TUBE, WATER (X)	1	W/TRANSOM(X)
6	17562-87L00	BUSH, WATER TUBE UPPER	1	
7	17563-87D00	BUSH, WATER TUBE LOWER	1	
8	17564-87D00	BUSH, WATER PUMP CASE	1	
9	17631-87L00	FILTER, WATER PORT SIDE	1	
10	17632-87L00	FILTER, WATER STBD SIDE	1	
11	29116-93J10	BOLT	4	
12	09161-16008	WASHER (15.8X26X1)	2	
13	09202-06031	PIN (6X12)	2	
14	09420-04009	KEY	1	
15	09132-04034	SCREW (4X18)	1	
16	17413-99E11	SLEEVE, WATER PUMP CASE	1	
17	17416-99E10	SEALING, WATER PUMP CASE NO.1	1	
18	17400-87L01	WATER PUMP REPAIR KIT	1	OPT

FIG.160B

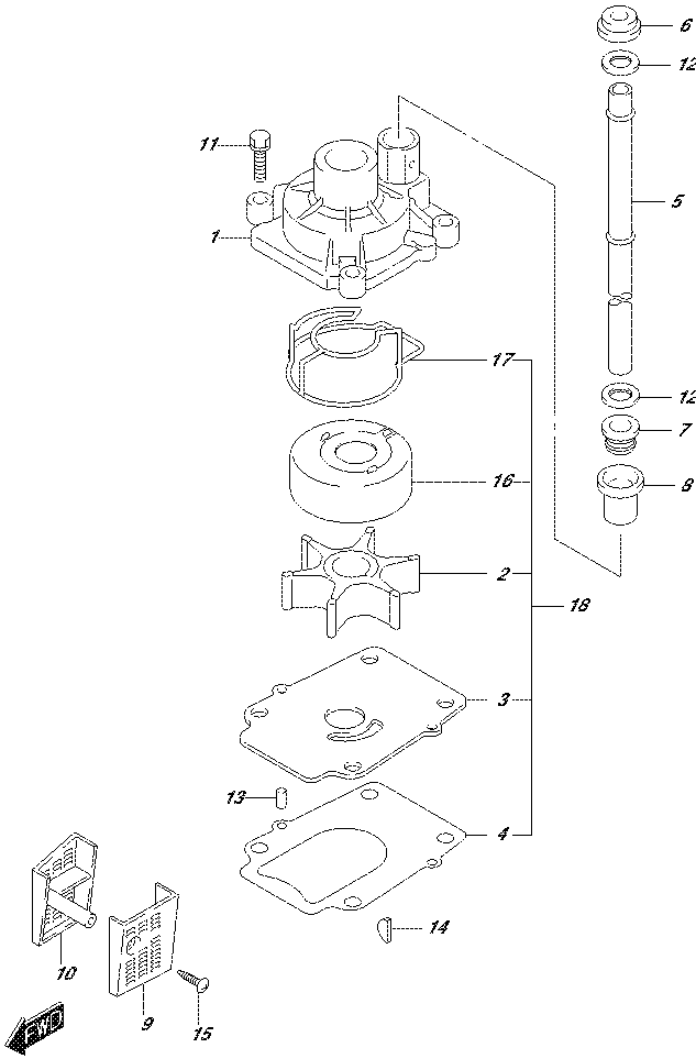

FIG.160B (1-F-5) WATER PUMP (DF70A E40)

REF NO.	PART NO.	DESCRIPTION	Q'TY	REMARKS
1	17410-99E10	CASE, WATER PUMP	1	
2	17461-87E12	IMPELLER, WATER PUMP	1	
3	17471-87L10	PANEL, PUMP CASE UNDER	1	
4	17472-87L00	GASKET, PUMP CASE PANEL	1	
5-1	17561-87L20	TUBE, WATER (L)	1	W/TRANSOM(L)
5-2	17561-87L30	TUBE, WATER (X)	1	W/TRANSOM(X)
6	17562-87L00	BUSH, WATER TUBE UPPER	1	
7	17563-87D00	BUSH, WATER TUBE LOWER	1	
8	17564-87D00	BUSH, WATER PUMP CASE	1	
9	17631-87L00	FILTER, WATER PORT SIDE	1	
10	17632-87L00	FILTER, WATER STBD SIDE	1	
11	29116-93J10	BOLT	4	
12	09161-16008	WASHER (15.8X26X1)	2	
13	09202-06031	PIN (6X12)	2	
14	09420-04009	KEY	1	
15	09132-04034	SCREW (4X18)	1	
16	17413-99E21	SLEEVE, WATER PUMP CASE	1	
17	17416-99E10	SEALING, WATER PUMP CASE NO.1	1	
18	17400-87L01	WATER PUMP REPAIR KIT	1	OPT

FIG.160C

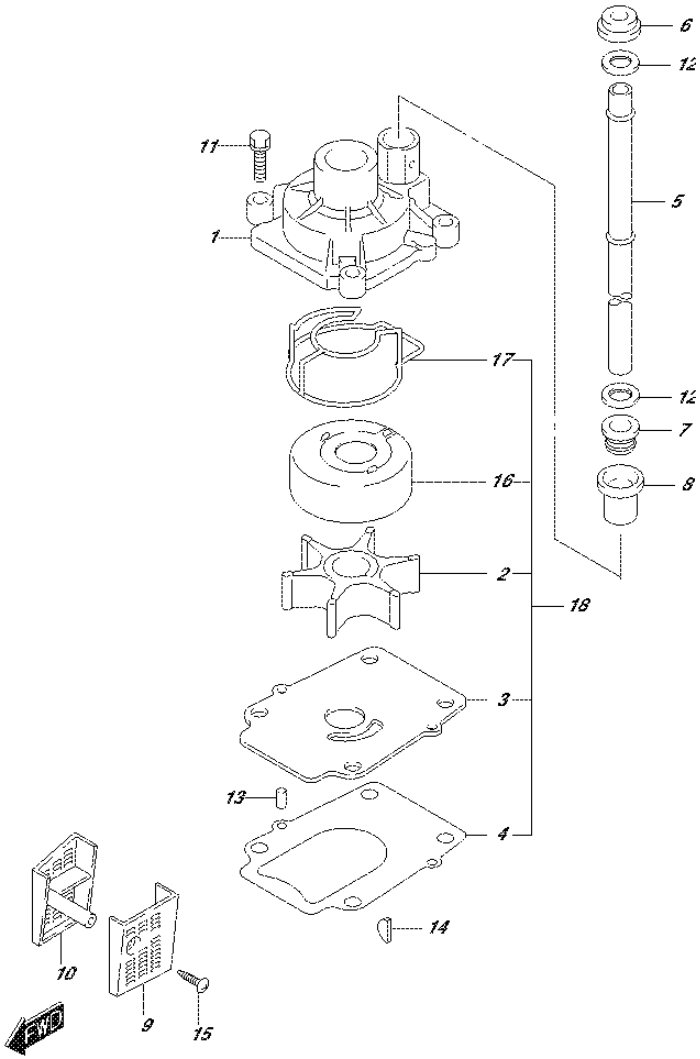

FIG.160C (1-F-6) WATER PUMP (DF70ATH E01)

REF NO.	PART NO.	DESCRIPTION	Q'TY	REMARKS
1	17410-99E10	CASE, WATER PUMP	1	
2	17461-87E12	IMPELLER, WATER PUMP	1	
3	17471-87L00	PANEL, PUMP CASE UNDER	1	
4	17472-87L00	GASKET, PUMP CASE PANEL	1	
5-1	17561-87L20	TUBE, WATER (L)	1	W/TRANSOM(L)
5-2	17561-87L30	TUBE, WATER (X)	1	W/TRANSOM(X)
6	17562-87L00	BUSH, WATER TUBE UPPER	1	
7	17563-87D00	BUSH, WATER TUBE LOWER	1	
8	17564-87D00	BUSH, WATER PUMP CASE	1	
9	17631-87L00	FILTER, WATER PORT SIDE	1	
10	17632-87L00	FILTER, WATER STBD SIDE	1	
11	29116-93J10	BOLT	4	
12	09161-16008	WASHER (15.8X26X1)	2	
13	09202-06031	PIN (6X12)	2	
14	09420-04009	KEY	1	
15	09132-04034	SCREW (4X18)	1	
16	17413-99E11	SLEEVE, WATER PUMP CASE	1	
17	17416-99E10	SEALING, WATER PUMP CASE NO.1	1	
18	17400-87L01	WATER PUMP REPAIR KIT	1	OPT

FIG.160D

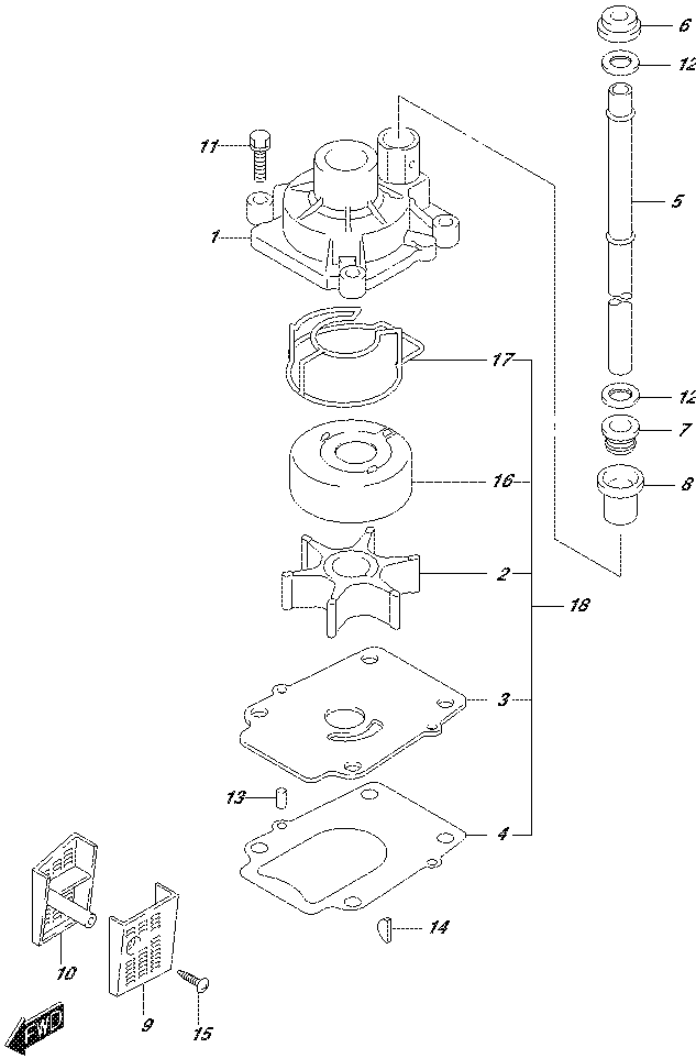

FIG.160D (1-F-7) WATER PUMP (DF70ATH E40)

REF NO.	PART NO.	DESCRIPTION	Q'TY	REMARKS
1	17410-99E10	CASE, WATER PUMP	1	
2	17461-87E12	IMPELLER, WATER PUMP	1	
3	17471-87L10	PANEL, PUMP CASE UNDER	1	
4	17472-87L00	GASKET, PUMP CASE PANEL	1	
5-1	17561-87L20	TUBE, WATER (L)	1	W/TRANSOM(L)
5-2	17561-87L30	TUBE, WATER (X)	1	W/TRANSOM(X)
6	17562-87L00	BUSH, WATER TUBE UPPER	1	
7	17563-87D00	BUSH, WATER TUBE LOWER	1	
8	17564-87D00	BUSH, WATER PUMP CASE	1	
9	17631-87L00	FILTER, WATER PORT SIDE	1	
10	17632-87L00	FILTER, WATER STBD SIDE	1	
11	29116-93J10	BOLT	4	
12	09161-16008	WASHER (15.8X26X1)	2	
13	09202-06031	PIN (6X12)	2	
14	09420-04009	KEY	1	
15	09132-04034	SCREW (4X18)	1	
16	17413-99E21	SLEEVE, WATER PUMP CASE	1	
17	17416-99E10	SEALING, WATER PUMP CASE NO.1	1	
18	17400-87L01	WATER PUMP REPAIR KIT	1	OPT

FIG.160E

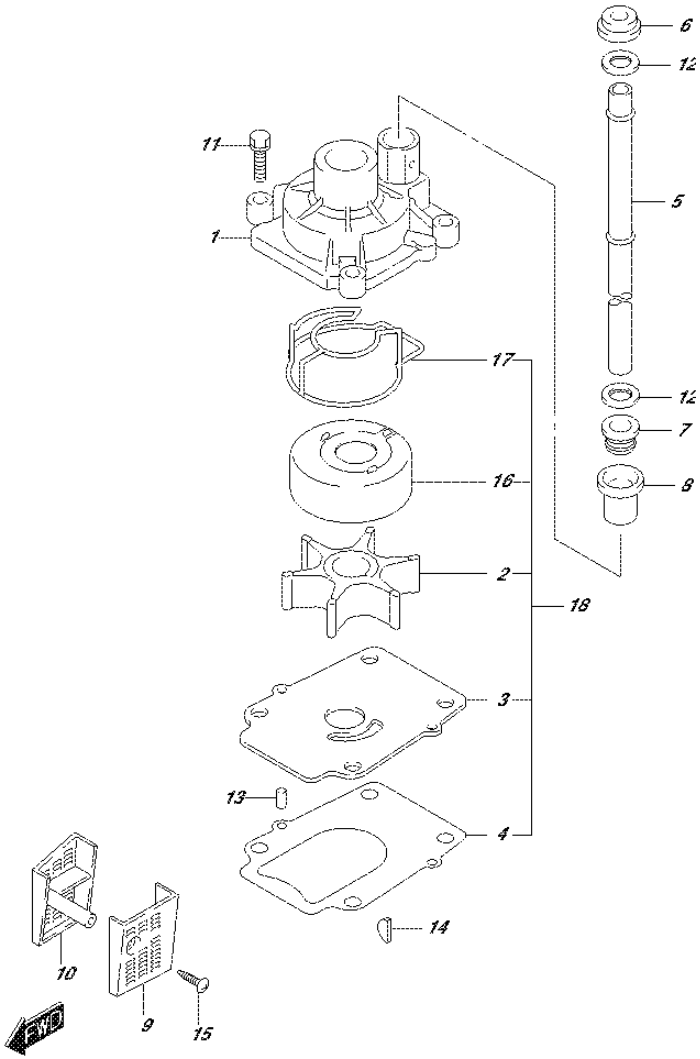

FIG.160E (1-F-8) WATER PUMP (DF80A E01)

REF NO.	PART NO.	DESCRIPTION	Q'TY	REMARKS
1	17410-99E10	CASE, WATER PUMP	1	
2	17461-87E12	IMPELLER, WATER PUMP	1	
3	17471-87L00	PANEL, PUMP CASE UNDER	1	
4	17472-87L00	GASKET, PUMP CASE PANEL	1	
5-1	17561-87L20	TUBE, WATER (L)	1	W/TRANSOM(L)
5-2	17561-87L30	TUBE, WATER (X)	1	W/TRANSOM(X)
6	17562-87L00	BUSH, WATER TUBE UPPER	1	
7	17563-87D00	BUSH, WATER TUBE LOWER	1	
8	17564-87D00	BUSH, WATER PUMP CASE	1	
9	17631-87L00	FILTER, WATER PORT SIDE	1	
10	17632-87L00	FILTER, WATER STBD SIDE	1	
11	29116-93J10	BOLT	4	
12	09161-16008	WASHER (15.8X26X1)	2	
13	09202-06031	PIN (6X12)	2	
14	09420-04009	KEY	1	
15	09132-04034	SCREW (4X18)	1	
16	17413-99E11	SLEEVE, WATER PUMP CASE	1	
17	17416-99E10	SEALING, WATER PUMP CASE NO.1	1	
18	17400-87L01	WATER PUMP REPAIR KIT	1	OPT

FIG.160F

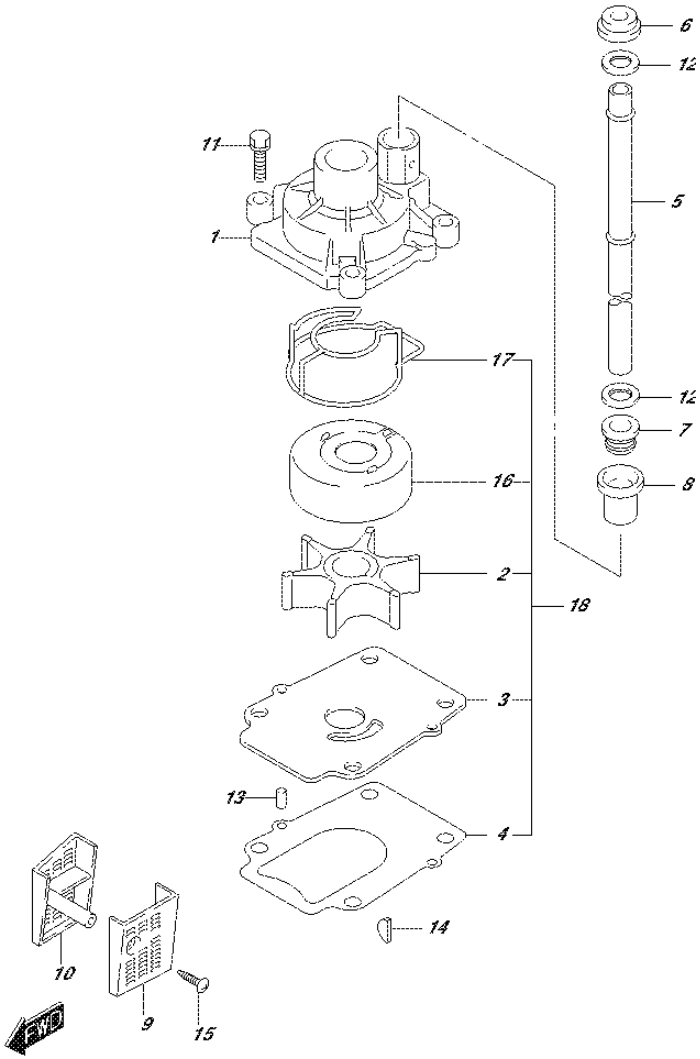

FIG.160F (1-F-9) WATER PUMP (DF80A E40)

REF NO.	PART NO.	DESCRIPTION	Q'TY	REMARKS
1	17410-99E10	CASE, WATER PUMP	1	
2	17461-87E12	IMPELLER, WATER PUMP	1	
3	17471-87L10	PANEL, PUMP CASE UNDER	1	
4	17472-87L00	GASKET, PUMP CASE PANEL	1	
5-1	17561-87L20	TUBE, WATER (L)	1	W/TRANSOM(L)
5-2	17561-87L30	TUBE, WATER (X)	1	W/TRANSOM(X)
6	17562-87L00	BUSH, WATER TUBE UPPER	1	
7	17563-87D00	BUSH, WATER TUBE LOWER	1	
8	17564-87D00	BUSH, WATER PUMP CASE	1	
9	17631-87L00	FILTER, WATER PORT SIDE	1	
10	17632-87L00	FILTER, WATER STBD SIDE	1	
11	29116-93J10	BOLT	4	
12	09161-16008	WASHER (15.8X26X1)	2	
13	09202-06031	PIN (6X12)	2	
14	09420-04009	KEY	1	
15	09132-04034	SCREW (4X18)	1	
16	17413-99E21	SLEEVE, WATER PUMP CASE	1	
17	17416-99E10	SEALING, WATER PUMP CASE NO.1	1	
18	17400-87L01	WATER PUMP REPAIR KIT	1	OPT

FIG.160G

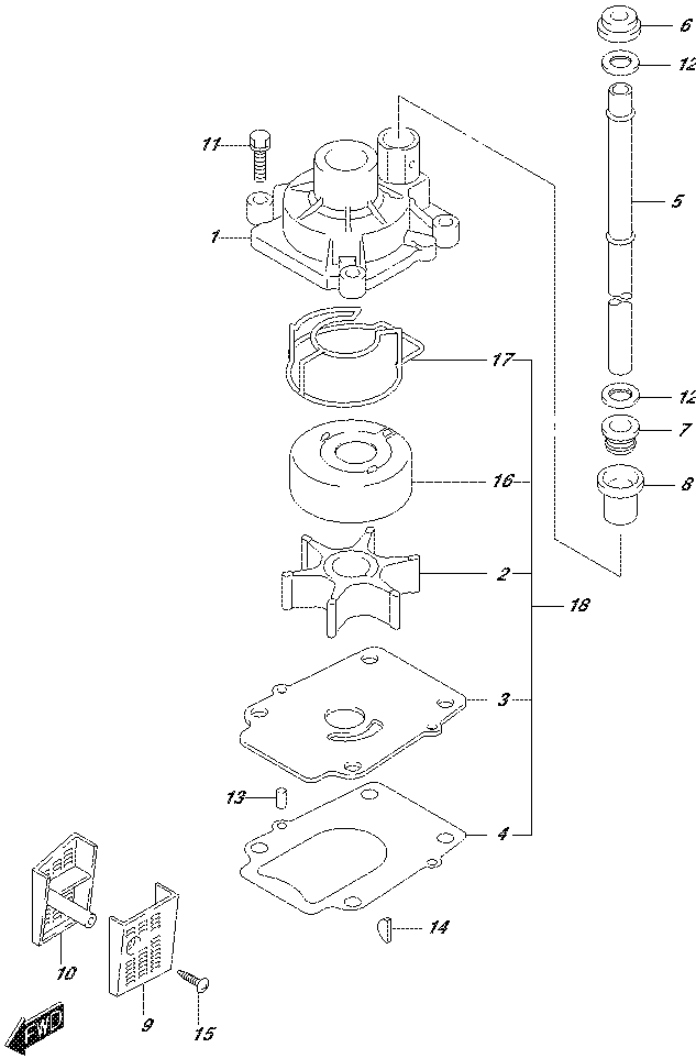

FIG.160G (1-F-10) WATER PUMP (DF90A E01)

REF NO.	PART NO.	DESCRIPTION	Q'TY	REMARKS
1	17410-99E10	CASE, WATER PUMP	1	
2	17461-87E12	IMPELLER, WATER PUMP	1	
3	17471-87L00	PANEL, PUMP CASE UNDER	1	
4	17472-87L00	GASKET, PUMP CASE PANEL	1	
5-1	17561-87L20	TUBE, WATER (L)	1	W/TRANSOM(L)
5-2	17561-87L30	TUBE, WATER (X)	1	W/TRANSOM(X)
6	17562-87L00	BUSH, WATER TUBE UPPER	1	
7	17563-87D00	BUSH, WATER TUBE LOWER	1	
8	17564-87D00	BUSH, WATER PUMP CASE	1	
9	17631-87L00	FILTER, WATER PORT SIDE	1	
10	17632-87L00	FILTER, WATER STBD SIDE	1	
11	29116-93J10	BOLT	4	
12	09161-16008	WASHER (15.8X26X1)	2	
13	09202-06031	PIN (6X12)	2	
14	09420-04009	KEY	1	
15	09132-04034	SCREW (4X18)	1	
16	17413-99E11	SLEEVE, WATER PUMP CASE	1	
17	17416-99E10	SEALING, WATER PUMP CASE NO.1	1	
18	17400-87L01	WATER PUMP REPAIR KIT	1	OPT

FIG.160H

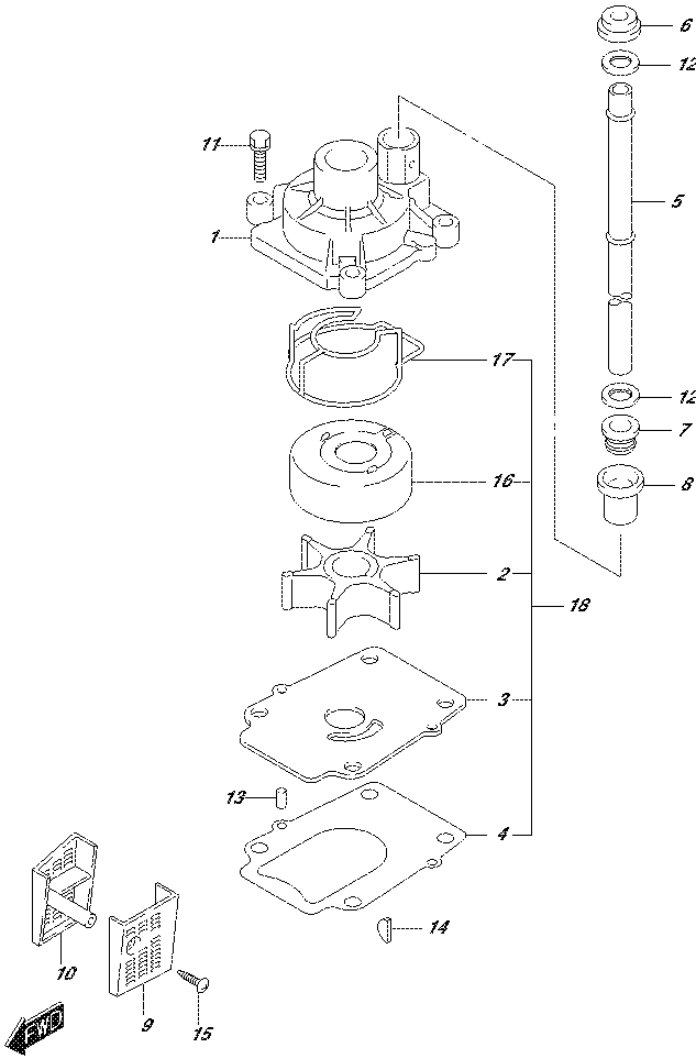

FIG.160H (1-F-11) WATER PUMP (DF90A E40)

REF NO.	PART NO.	DESCRIPTION	Q'TY	REMARKS
1	17410-99E10	CASE, WATER PUMP	1	
2	17461-87E12	IMPELLER, WATER PUMP	1	
3	17471-87L10	PANEL, PUMP CASE UNDER	1	
4	17472-87L00	GASKET, PUMP CASE PANEL	1	
5-1	17561-87L20	TUBE, WATER (L)	1	W/TRANSOM(L)
5-2	17561-87L30	TUBE, WATER (X)	1	W/TRANSOM(X)
6	17562-87L00	BUSH, WATER TUBE UPPER	1	
7	17563-87D00	BUSH, WATER TUBE LOWER	1	
8	17564-87D00	BUSH, WATER PUMP CASE	1	
9	17631-87L00	FILTER, WATER PORT SIDE	1	
10	17632-87L00	FILTER, WATER STBD SIDE	1	
11	29116-93J10	BOLT	4	
12	09161-16008	WASHER (15.8X26X1)	2	
13	09202-06031	PIN (6X12)	2	
14	09420-04009	KEY	1	
15	09132-04034	SCREW (4X18)	1	
16	17413-99E21	SLEEVE, WATER PUMP CASE	1	
17	17416-99E10	SEALING, WATER PUMP CASE NO.1	1	
18	17400-87L01	WATER PUMP REPAIR KIT	1	OPT

FIG.160J

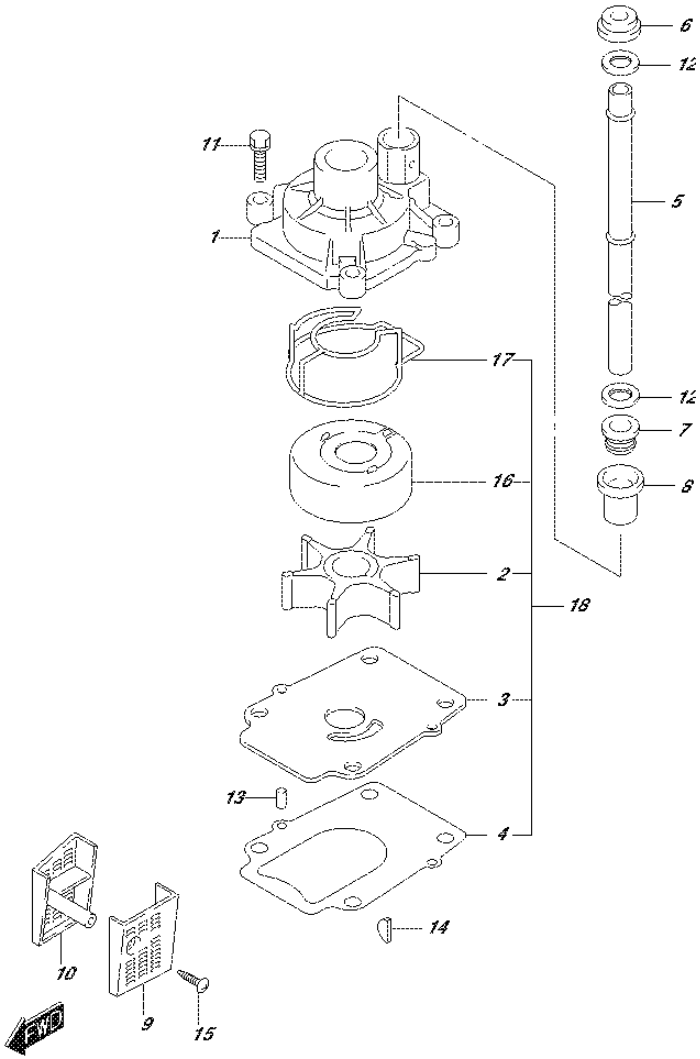

FIG.160J (1-F-12) WATER PUMP (DF90ATH E01)

REF NO.	PART NO.	DESCRIPTION	Q'TY	REMARKS
1	17410-99E10	CASE, WATER PUMP	1	
2	17461-87E12	IMPELLER, WATER PUMP	1	
3	17471-87L00	PANEL, PUMP CASE UNDER	1	
4	17472-87L00	GASKET, PUMP CASE PANEL	1	
5-1	17561-87L20	TUBE, WATER (L)	1	W/TRANSOM(L)
5-2	17561-87L30	TUBE, WATER (X)	1	W/TRANSOM(X)
6	17562-87L00	BUSH, WATER TUBE UPPER	1	
7	17563-87D00	BUSH, WATER TUBE LOWER	1	
8	17564-87D00	BUSH, WATER PUMP CASE	1	
9	17631-87L00	FILTER, WATER PORT SIDE	1	
10	17632-87L00	FILTER, WATER STBD SIDE	1	
11	29116-93J10	BOLT	4	
12	09161-16008	WASHER (15.8X26X1)	2	
13	09202-06031	PIN (6X12)	2	
14	09420-04009	KEY	1	
15	09132-04034	SCREW (4X18)	1	
16	17413-99E11	SLEEVE, WATER PUMP CASE	1	
17	17416-99E10	SEALING, WATER PUMP CASE NO.1	1	
18	17400-87L01	WATER PUMP REPAIR KIT	1	OPT

FIG.160K

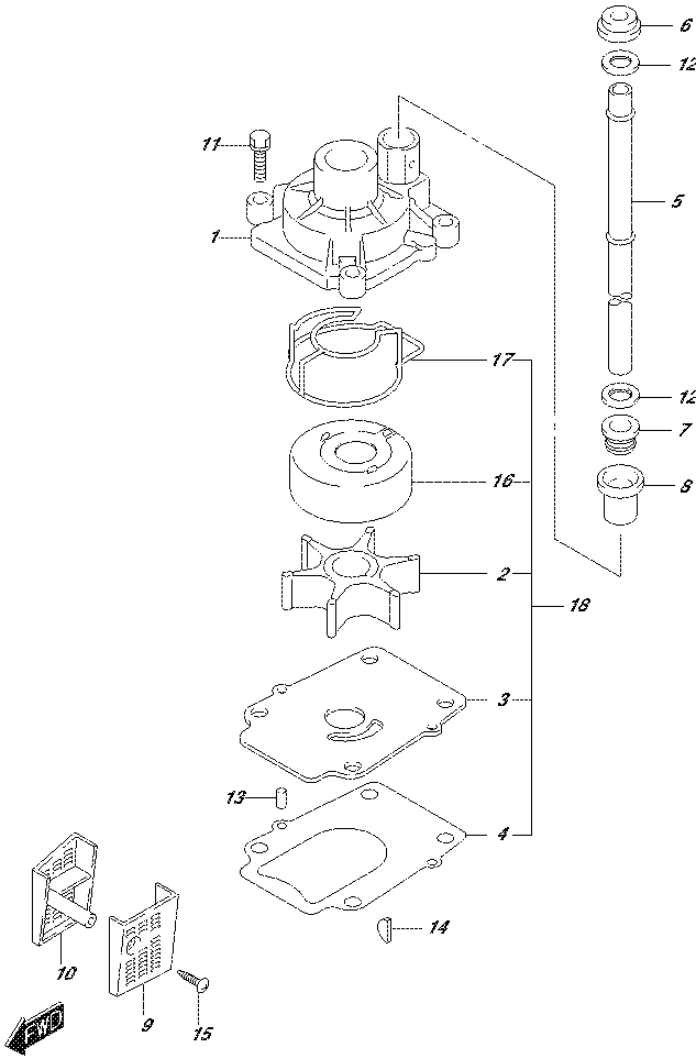

FIG.160K (1-F-13) WATER PUMP (DF90ATH E40)

REF NO.	PART NO.	DESCRIPTION	Q'TY	REMARKS
1	17410-99E10	CASE, WATER PUMP	1	
2	17461-87E12	IMPELLER, WATER PUMP	1	
3	17471-87L10	PANEL, PUMP CASE UNDER	1	
4	17472-87L00	GASKET, PUMP CASE PANEL	1	
5-1	17561-87L20	TUBE, WATER (L)	1	W/TRANSOM(L)
5-2	17561-87L30	TUBE, WATER (X)	1	W/TRANSOM(X)
6	17562-87L00	BUSH, WATER TUBE UPPER	1	
7	17563-87D00	BUSH, WATER TUBE LOWER	1	
8	17564-87D00	BUSH, WATER PUMP CASE	1	
9	17631-87L00	FILTER, WATER PORT SIDE	1	
10	17632-87L00	FILTER, WATER STBD SIDE	1	
11	29116-93J10	BOLT	4	
12	09161-16008	WASHER (15.8X26X1)	2	
13	09202-06031	PIN (6X12)	2	
14	09420-04009	KEY	1	
15	09132-04034	SCREW (4X18)	1	
16	17413-99E21	SLEEVE, WATER PUMP CASE	1	
17	17416-99E10	SEALING, WATER PUMP CASE NO.1	1	
18	17400-87L01	WATER PUMP REPAIR KIT	1	OPT

FIG.162A

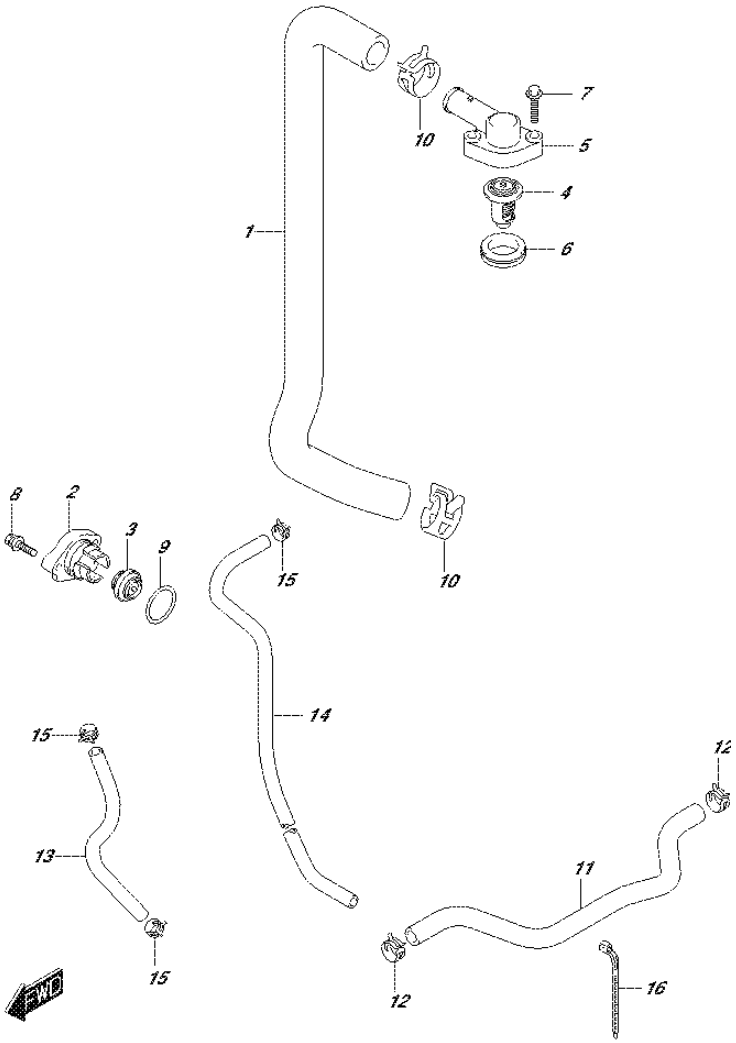

FIG.162A (1-F-14) THERMOSTAT (DF70A E01)

REF NO.	PART NO.	DESCRIPTION	Q'TY	REMARKS
1	11196-87L00	HOSE, WATER RETURN	1	
2-1	17611-90J00-0EP	COVER, WATER PRESS VALVE (BLACK)	1	
2-2	17611-90J00-Y5S	COVER, WATER PRESS VALVE (WHITE)	1	
3	17660-99E01	VALVE, WATER PRESSURE	1	
4-1	17670-90J00	THERMOSTAT (60C)	1	
4-2	17670-90J10	THERMOSTAT (71C)	1	OPT
5	17681-87L00	COVER, THERMOSTAT	1	
6	17685-87L00	SEAL, THERMOSTAT COVER	1	
7	01550-06307	BOLT	2	
8	09116-06121	BOLT (6X25)	2	
9	09280-26006	O RING (D:3.1,ID:26.4)	1	
10	09401-26408	CLIP	2	
11	17915-87L00	HOSE, WATER FLUSH	1	
12	09401-15414	CLIP	2	
13	09352-50903-600	HOSE (5X9X600)	1	L:600->320
14	09352-50903-600	HOSE (5X9X600)	1	L:600->190
15	09401-08413	CLIP	3	
16	09407-11401	CLAMP (L:95)	1	

FIG.162B

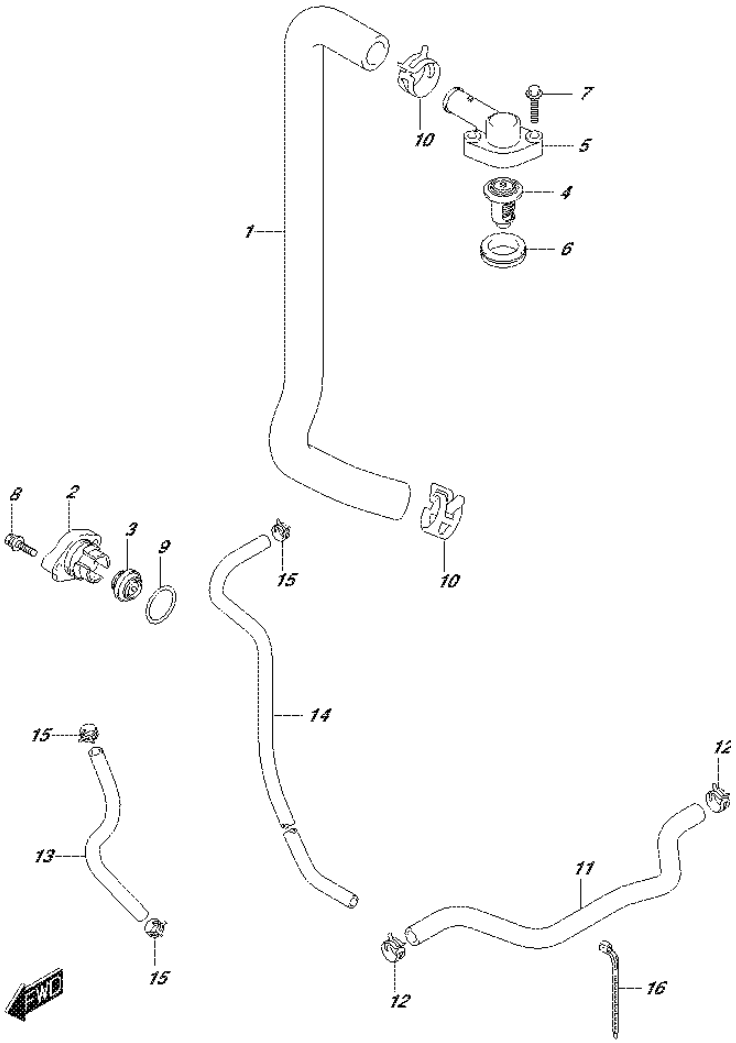

FIG.162B (1-F-15) THERMOSTAT (DF70A E40)

REF NO.	PART NO.	DESCRIPTION	Q'TY	REMARKS
1	11196-87L00	HOSE, WATER RETURN	1	
2-1	17611-90J00-0EP	COVER, WATER PRESS VALVE (BLACK)	1	
2-2	17611-90J00-Y5S	COVER, WATER PRESS VALVE (WHITE)	1	
3	17660-99E01	VALVE, WATER PRESSURE	1	
4-1	17670-90J00	THERMOSTAT (60C)	1	
4-2	17670-90J10	THERMOSTAT (71C)	1	OPT
5	17681-87L00	COVER, THERMOSTAT	1	
6	17685-87L00	SEAL, THERMOSTAT COVER	1	
7	01550-06307	BOLT	2	
8	09116-06121	BOLT (6X25)	2	
9	09280-26006	O RING (D:3.1,ID:26.4)	1	
10	09401-26408	CLIP	2	
11	17915-87L00	HOSE, WATER FLUSH	1	
12	09401-15414	CLIP	2	
13	09352-50903-600	HOSE (5X9X600)	1	L:600->320
14	09352-50903-600	HOSE (5X9X600)	1	L:600->190
15	09401-08413	CLIP	3	
16	09407-11401	CLAMP (L:95)	1	

FIG.162C

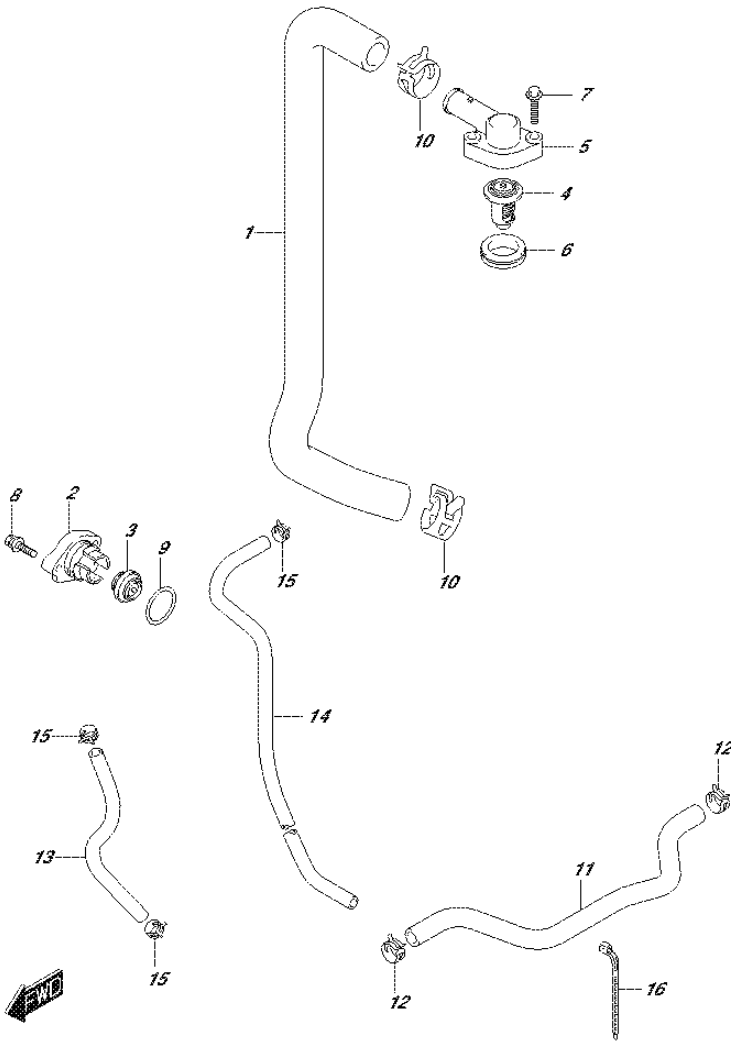

FIG.162C (1-G-2) THERMOSTAT (DF70ATH E01)

REF NO.	PART NO.	DESCRIPTION	Q'TY	REMARKS
1	11196-87L00	HOSE, WATER RETURN	1	
2	17611-90J00-0EP	COVER, WATER PRESS VALVE (BLACK)	1	
3	17660-99E01	VALVE, WATER PRESSURE	1	
4-1	17670-90J00	THERMOSTAT (60C)	1	
4-2	17670-90J10	THERMOSTAT (71C)	1	OPT
5	17681-87L00	COVER, THERMOSTAT	1	
6	17685-87L00	SEAL, THERMOSTAT COVER	1	
7	01550-06307	BOLT	2	
8	09116-06121	BOLT (6X25)	2	
9	09280-26006	O RING (D:3.1,ID:26.4)	1	
10	09401-26408	CLIP	2	
11	17915-87L00	HOSE, WATER FLUSH	1	
12	09401-15414	CLIP	2	
13	09352-50903-600	HOSE (5X9X600)	1	L:600->320
14	09352-50903-600	HOSE (5X9X600)	1	L:600->190
15	09401-08413	CLIP	3	
16	09407-11401	CLAMP (L:95)	1	

FIG.162D

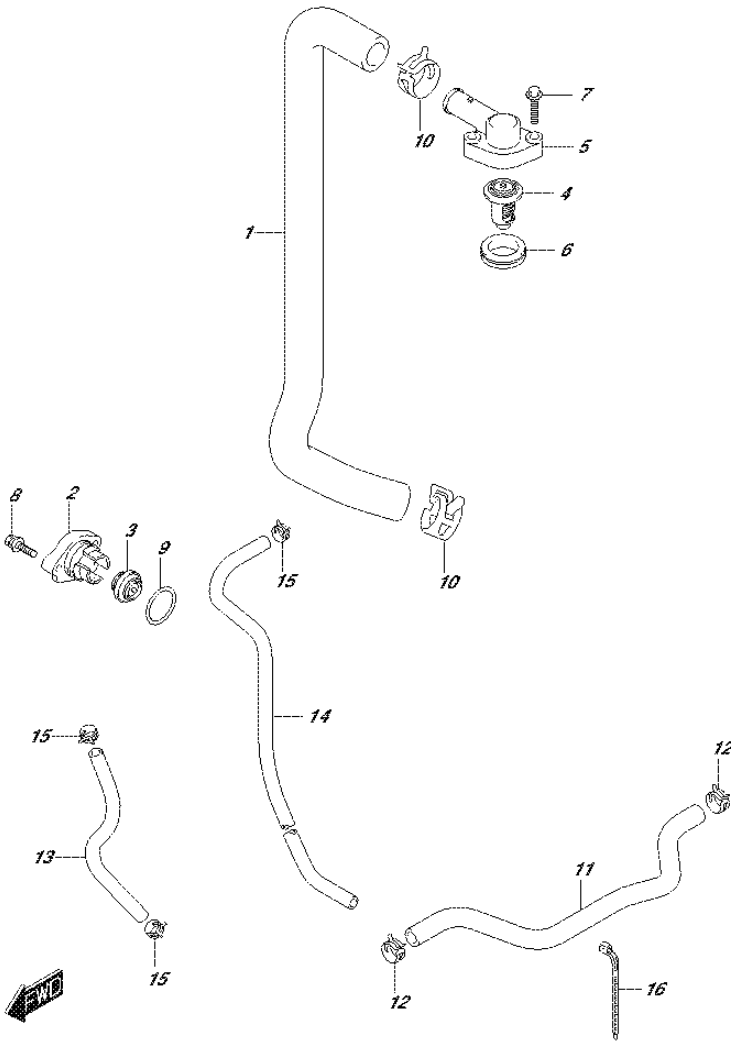

FIG.162D (1-G-3) THERMOSTAT (DF70ATH E40)

REF NO.	PART NO.	DESCRIPTION	Q'TY	REMARKS
1	11196-87L00	HOSE, WATER RETURN	1	
2	17611-90J00-0EP	COVER, WATER PRESS VALVE (BLACK)	1	
3	17660-99E01	VALVE, WATER PRESSURE	1	
4-1	17670-90J00	THERMOSTAT (60C)	1	
4-2	17670-90J10	THERMOSTAT (71C)	1	OPT
5	17681-87L00	COVER, THERMOSTAT	1	
6	17685-87L00	SEAL, THERMOSTAT COVER	1	
7	01550-06307	BOLT	2	
8	09116-06121	BOLT (6X25)	2	
9	09280-26006	O RING (D:3.1,ID:26.4)	1	
10	09401-26408	CLIP	2	
11	17915-87L00	HOSE, WATER FLUSH	1	
12	09401-15414	CLIP	2	
13	09352-50903-600	HOSE (5X9X600)	1	L:600->320
14	09352-50903-600	HOSE (5X9X600)	1	L:600->190
15	09401-08413	CLIP	3	
16	09407-11401	CLAMP (L:95)	1	

FIG.162E

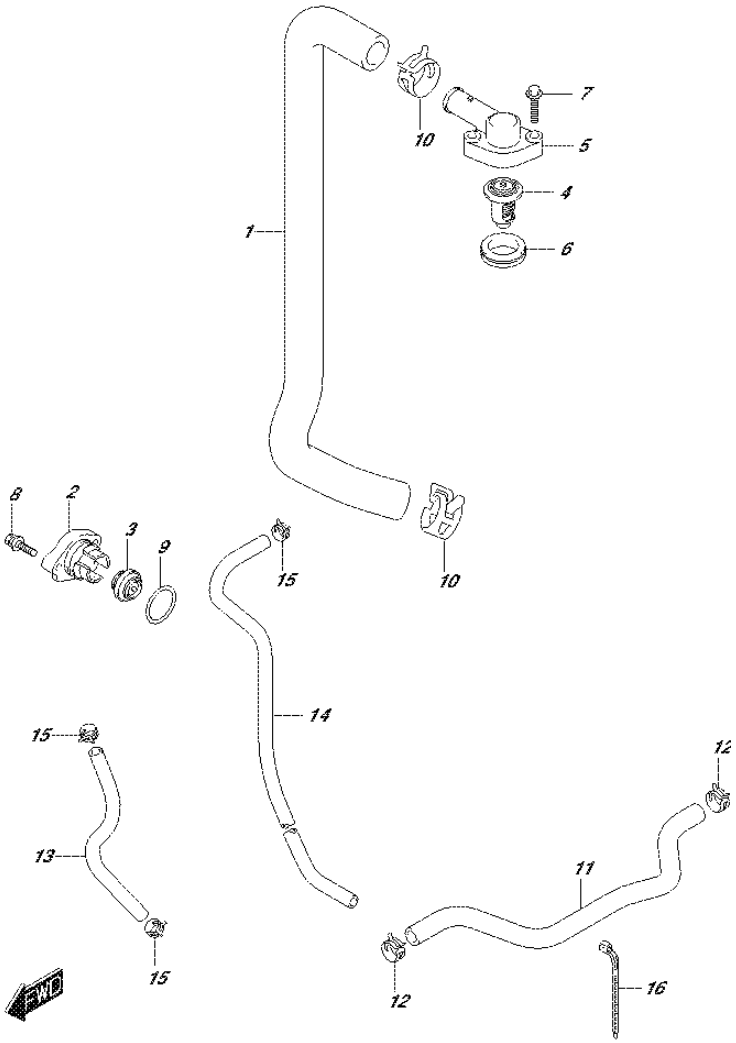

FIG.162E (1-G-4) THERMOSTAT (DF80A E01)

REF NO.	PART NO.	DESCRIPTION	Q'TY	REMARKS
1	11196-87L00	HOSE, WATER RETURN	1	
2	17611-90J00-0EP	COVER, WATER PRESS VALVE (BLACK)	1	
3	17660-99E01	VALVE, WATER PRESSURE	1	
4-1	17670-90J00	THERMOSTAT (60C)	1	
4-2	17670-90J10	THERMOSTAT (71C)	1	OPT
5	17681-87L00	COVER, THERMOSTAT	1	
6	17685-87L00	SEAL, THERMOSTAT COVER	1	
7	01550-06307	BOLT	2	
8	09116-06121	BOLT (6X25)	2	
9	09280-26006	O RING (D:3.1,ID:26.4)	1	
10	09401-26408	CLIP	2	
11	17915-87L00	HOSE, WATER FLUSH	1	
12	09401-15414	CLIP	2	
13	09352-50903-600	HOSE (5X9X600)	1	L:600->320
14	09352-50903-600	HOSE (5X9X600)	1	L:600->190
15	09401-08413	CLIP	3	
16	09407-11401	CLAMP (L:95)	1	

FIG.162F

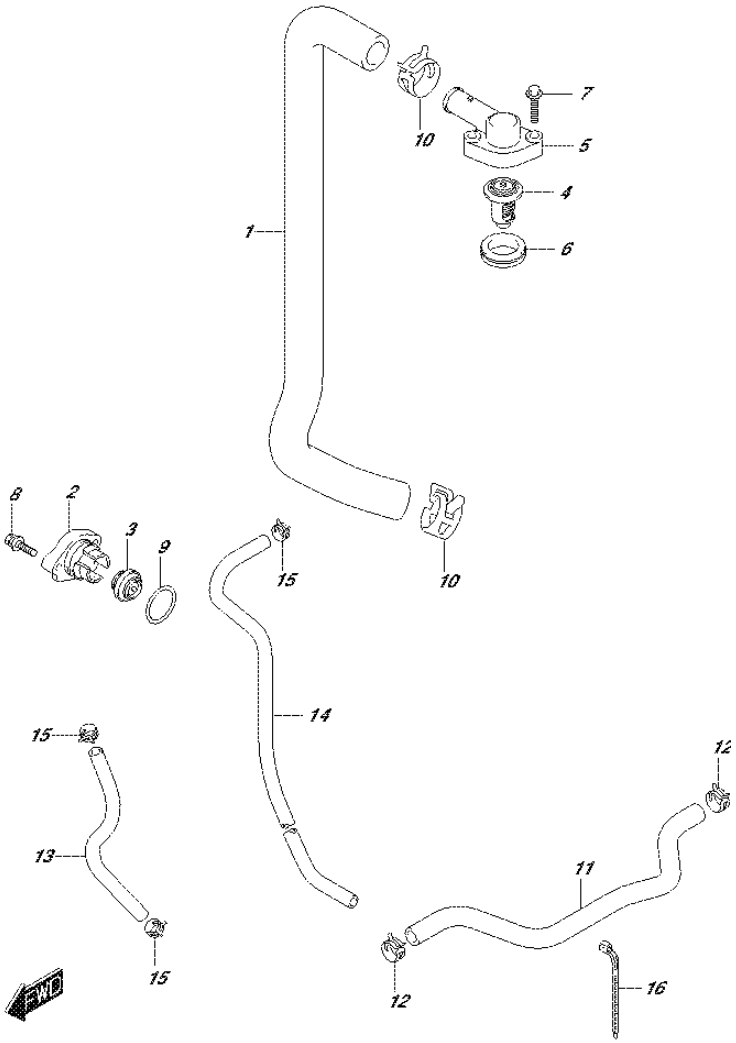

FIG.162F (1-G-5) THERMOSTAT (DF80A E40)

REF NO.	PART NO.	DESCRIPTION	Q'TY	REMARKS
1	11196-87L00	HOSE, WATER RETURN	1	
2	17611-90J00-0EP	COVER, WATER PRESS VALVE (BLACK)	1	
3	17660-99E01	VALVE, WATER PRESSURE	1	
4-1	17670-90J00	THERMOSTAT (60C)	1	
4-2	17670-90J10	THERMOSTAT (71C)	1	OPT
5	17681-87L00	COVER, THERMOSTAT	1	
6	17685-87L00	SEAL, THERMOSTAT COVER	1	
7	01550-06307	BOLT	2	
8	09116-06121	BOLT (6X25)	2	
9	09280-26006	O RING (D:3.1,ID:26.4)	1	
10	09401-26408	CLIP	2	
11	17915-87L00	HOSE, WATER FLUSH	1	
12	09401-15414	CLIP	2	
13	09352-50903-600	HOSE (5X9X600)	1	L:600->320
14	09352-50903-600	HOSE (5X9X600)	1	L:600->190
15	09401-08413	CLIP	3	
16	09407-11401	CLAMP (L:95)	1	

FIG.162G

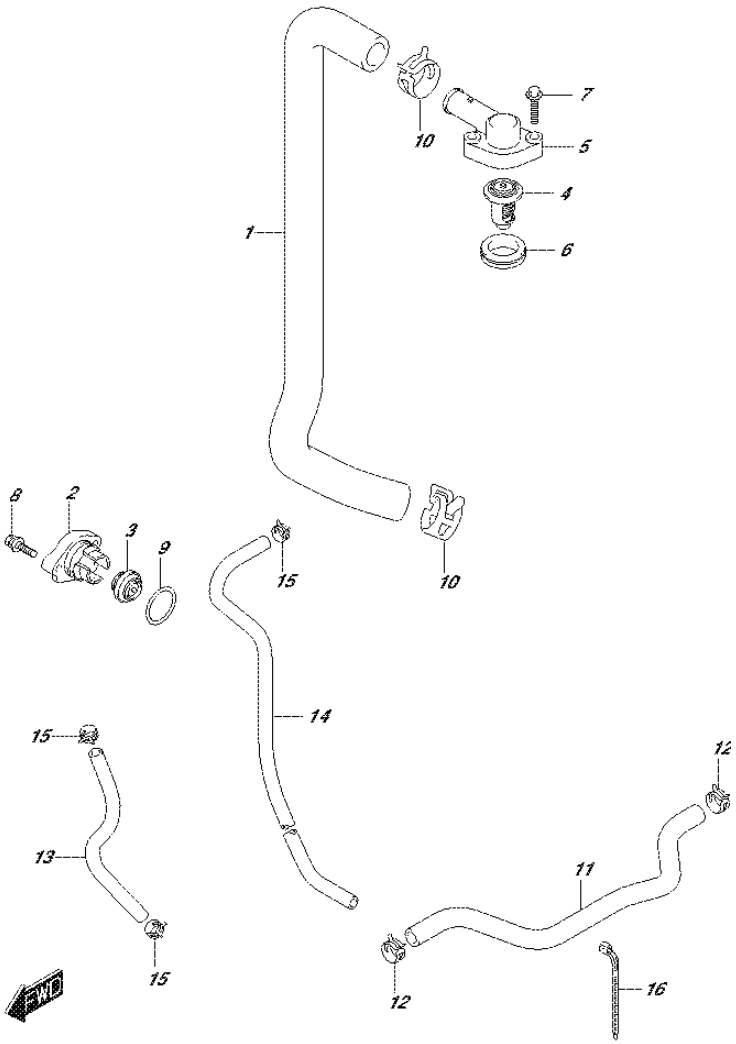

FIG.162G (1-G-6) THERMOSTAT (DF90A E01)

REF NO.	PART NO.	DESCRIPTION	Q'TY	REMARKS
1	11196-87L00	HOSE, WATER RETURN	1	
2-1	17611-90J00-0EP	COVER, WATER PRESS VALVE (BLACK)	1	
2-2	17611-90J00-Y5S	COVER, WATER PRESS VALVE (WHITE)	1	
3	17660-99E01	VALVE, WATER PRESSURE	1	
4-1	17670-90J00	THERMOSTAT (60C)	1	
4-2	17670-90J10	THERMOSTAT (71C)	1	OPT
5	17681-87L00	COVER, THERMOSTAT	1	
6	17685-87L00	SEAL, THERMOSTAT COVER	1	
7	01550-06307	BOLT	2	
8	09116-06121	BOLT (6X25)	2	
9	09280-26006	O RING (D:3.1,ID:26.4)	1	
10	09401-26408	CLIP	2	
11	17915-87L00	HOSE, WATER FLUSH	1	
12	09401-15414	CLIP	2	
13	09352-50903-600	HOSE (5X9X600)	1	L:600->320
14	09352-50903-600	HOSE (5X9X600)	1	L:600->190
15	09401-08413	CLIP	3	
16	09407-11401	CLAMP (L:95)	1	

FIG.162H

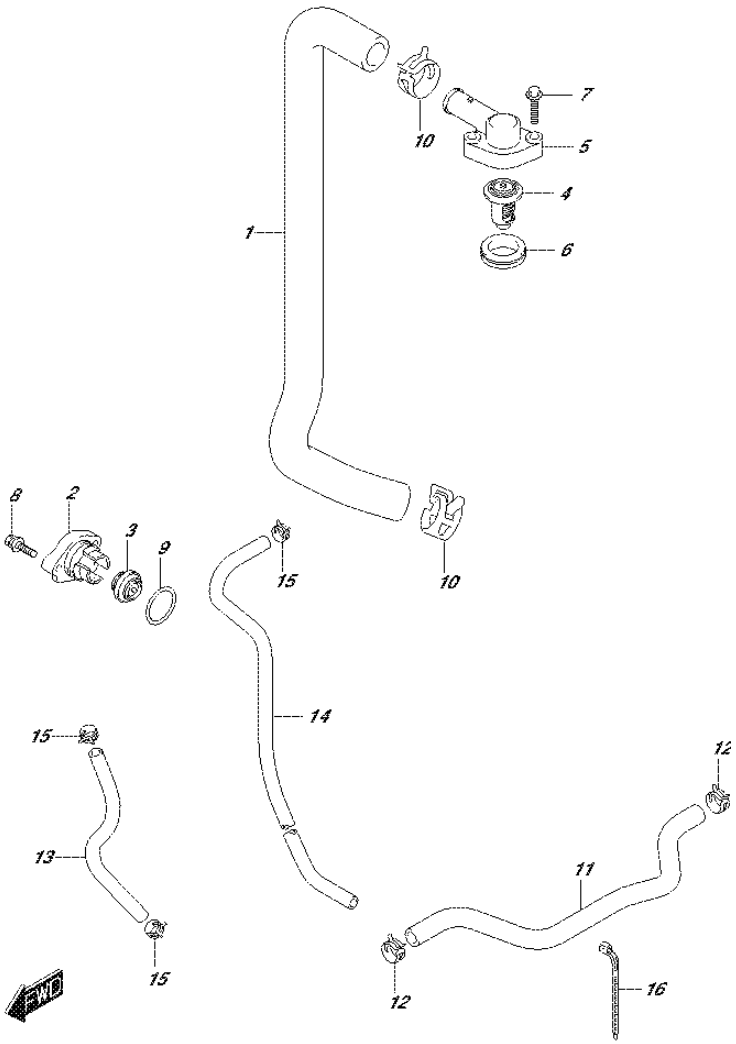

FIG.162H (1-G-7) THERMOSTAT (DF90A E40)

REF NO.	PART NO.	DESCRIPTION	Q'TY	REMARKS
1	11196-87L00	HOSE, WATER RETURN	1	
2-1	17611-90J00-0EP	COVER, WATER PRESS VALVE (BLACK)	1	
2-2	17611-90J00-Y5S	COVER, WATER PRESS VALVE (WHITE)	1	
3	17660-99E01	VALVE, WATER PRESSURE	1	
4-1	17670-90J00	THERMOSTAT (60C)	1	
4-2	17670-90J10	THERMOSTAT (71C)	1	OPT
5	17681-87L00	COVER, THERMOSTAT	1	
6	17685-87L00	SEAL, THERMOSTAT COVER	1	
7	01550-06307	BOLT	2	
8	09116-06121	BOLT (6X25)	2	
9	09280-26006	O RING (D:3.1,ID:26.4)	1	
10	09401-26408	CLIP	2	
11	17915-87L00	HOSE, WATER FLUSH	1	
12	09401-15414	CLIP	2	
13	09352-50903-600	HOSE (5X9X600)	1	L:600->320
14	09352-50903-600	HOSE (5X9X600)	1	L:600->190
15	09401-08413	CLIP	3	
16	09407-11401	CLAMP (L:95)	1	

FIG.162J

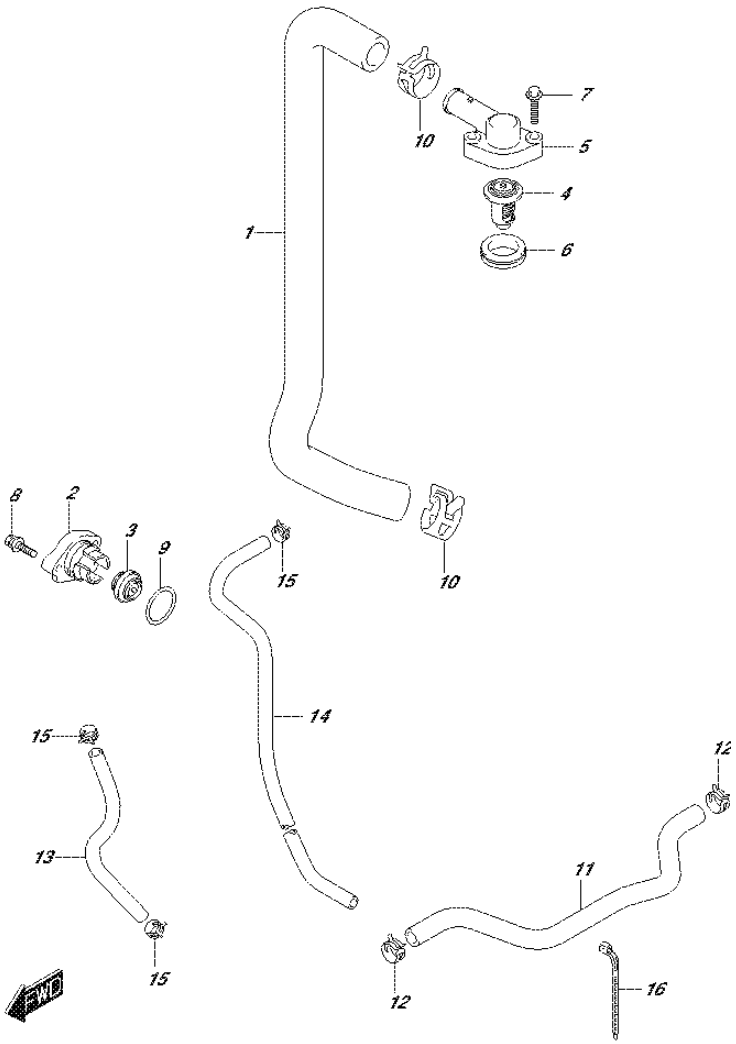

FIG.162J (1-G-8) THERMOSTAT (DF90ATH E01)

REF NO.	PART NO.	DESCRIPTION	Q'TY	REMARKS
1	11196-87L00	HOSE, WATER RETURN	1	
2	17611-90J00-0EP	COVER, WATER PRESS VALVE (BLACK)	1	
3	17660-99E01	VALVE, WATER PRESSURE	1	
4-1	17670-90J00	THERMOSTAT (60C)	1	
4-2	17670-90J10	THERMOSTAT (71C)	1	OPT
5	17681-87L00	COVER, THERMOSTAT	1	
6	17685-87L00	SEAL, THERMOSTAT COVER	1	
7	01550-06307	BOLT	2	
8	09116-06121	BOLT (6X25)	2	
9	09280-26006	O RING (D:3.1,ID:26.4)	1	
10	09401-26408	CLIP	2	
11	17915-87L00	HOSE, WATER FLUSH	1	
12	09401-15414	CLIP	2	
13	09352-50903-600	HOSE (5X9X600)	1	L:600->320
14	09352-50903-600	HOSE (5X9X600)	1	L:600->190
15	09401-08413	CLIP	3	
16	09407-11401	CLAMP (L:95)	1	

FIG.162K

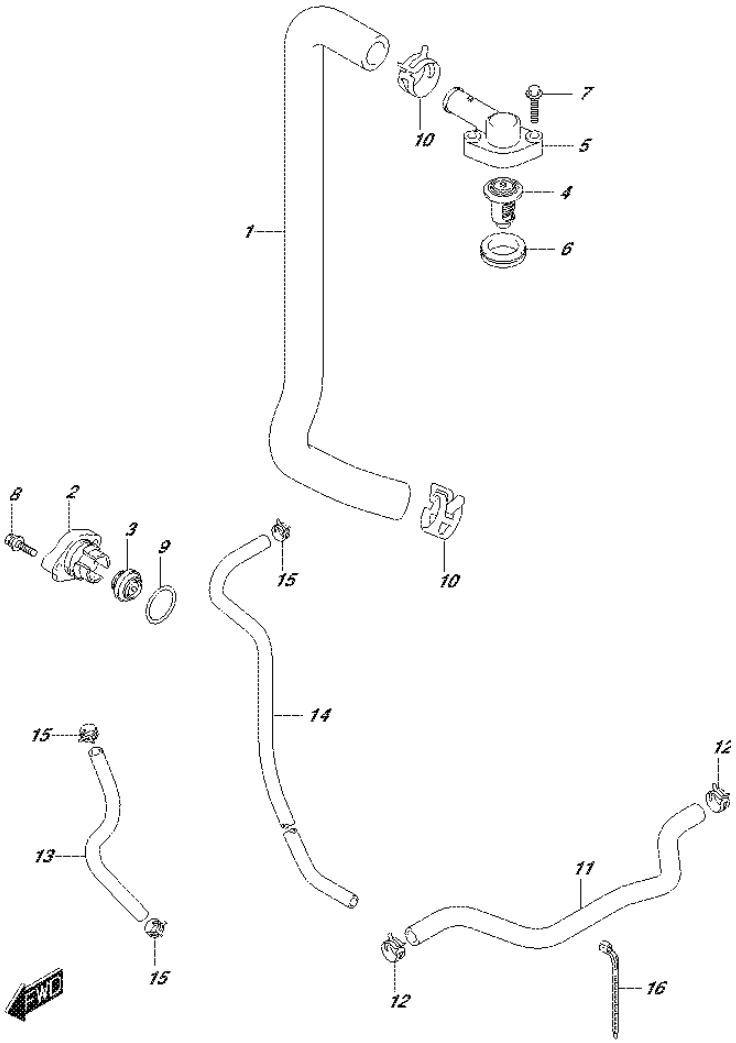

FIG.162K (1-G-9) THERMOSTAT (DF90ATH E40)

REF NO.	PART NO.	DESCRIPTION	Q'TY	REMARKS
1	11196-87L00	HOSE, WATER RETURN	1	
2	17611-90J00-0EP	COVER, WATER PRESS VALVE (BLACK)	1	
3	17660-99E01	VALVE, WATER PRESSURE	1	
4-1	17670-90J00	THERMOSTAT (60C)	1	
4-2	17670-90J10	THERMOSTAT (71C)	1	OPT
5	17681-87L00	COVER, THERMOSTAT	1	
6	17685-87L00	SEAL, THERMOSTAT COVER	1	
7	01550-06307	BOLT	2	
8	09116-06121	BOLT (6X25)	2	
9	09280-26006	O RING (D:3.1,ID:26.4)	1	
10	09401-26408	CLIP	2	
11	17915-87L00	HOSE, WATER FLUSH	1	
12	09401-15414	CLIP	2	
13	09352-50903-600	HOSE (5X9X600)	1	L:600->320
14	09352-50903-600	HOSE (5X9X600)	1	L:600->190
15	09401-08413	CLIP	3	
16	09407-11401	CLAMP (L:95)	1	

FIG. 163A

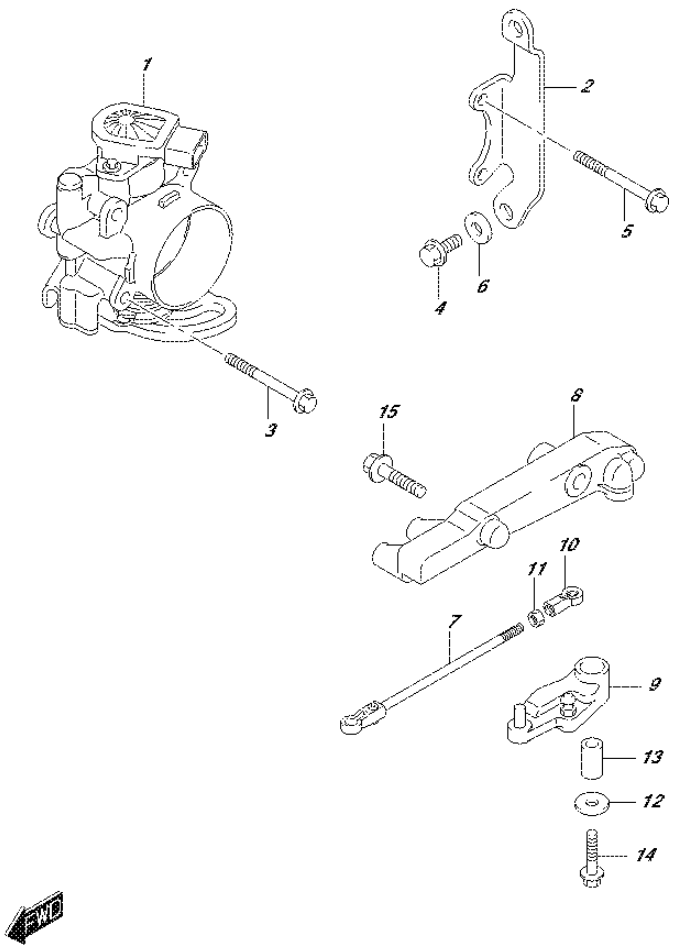

FIG.163A (1-G-10) THROTTLE BODY (DF70A E01)

REF NO.	PART NO.	DESCRIPTION	Q'TY	REMARKS
1	13300-87L00	BODY ASSY, THROTTLE	1	
2	13315-87L00	BRACKET, THROTTLE BODY	1	
3	01550-06507	BOLT	2	
4	01550-06167	BOLT	3	
5	01550-06557	BOLT	2	
6	09160-06084	WASHER (6.5X18X1.6)	1	
7	13510-87L00	ROD, THROTTLE	1	
8	19115-87L00	HOLDER, THROTTLE LEVER	1	
9	19120-87L00	LEVER, THROTTLE	1	
10	19131-95502	CONNECTOR, THROTTLE ROD	1	
11	09140-05005	NUT	1	
12	09160-06046	WASHER (6.5X20X1.5)	1	
13	09180-06186	SPACER (6.2X12.6X21)	1	
14	01550-06357	BOLT	1	
15	01550-08307	BOLT	2	

FIG.163B

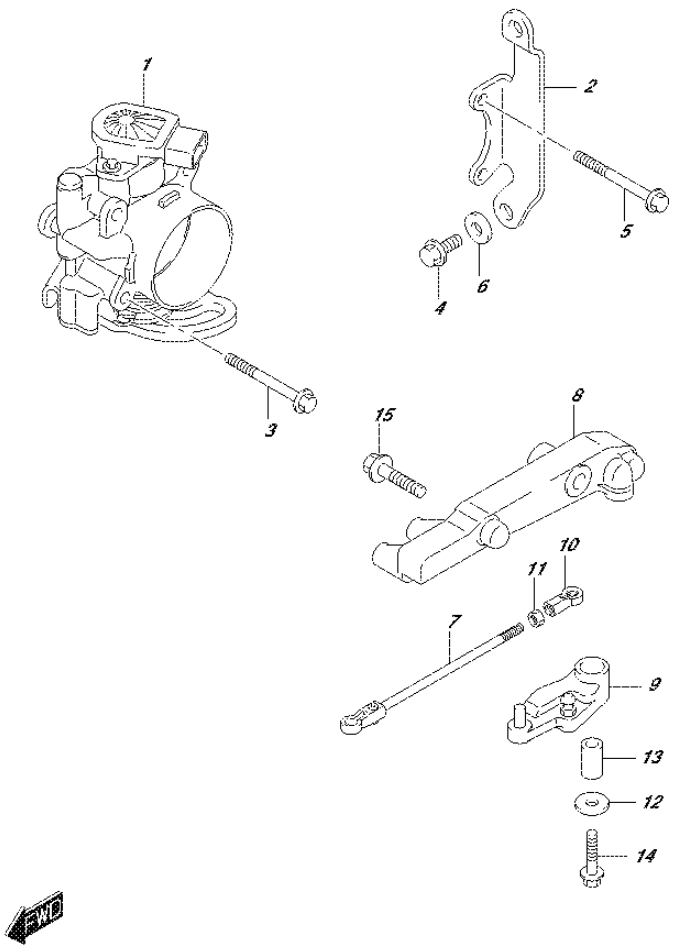

FIG.163B (1-G-11) THROTTLE BODY (DF70A E40)

REF NO.	PART NO.	DESCRIPTION	Q'TY	REMARKS
1	13300-87L00	BODY ASSY, THROTTLE	1	
2	13315-87L00	BRACKET, THROTTLE BODY	1	
3	01550-06507	BOLT	2	
4	01550-06167	BOLT	3	
5	01550-06557	BOLT	2	
6	09160-06084	WASHER (6.5X18X1.6)	1	
7	13510-87L00	ROD, THROTTLE	1	
8	19115-87L00	HOLDER, THROTTLE LEVER	1	
9	19120-87L00	LEVER, THROTTLE	1	
10	19131-95502	CONNECTOR, THROTTLE ROD	1	
11	09140-05005	NUT	1	
12	09160-06046	WASHER (6.5X20X1.5)	1	
13	09180-06186	SPACER (6.2X12.6X21)	1	
14	01550-06357	BOLT	1	
15	01550-08307	BOLT	2	

FIG.163C

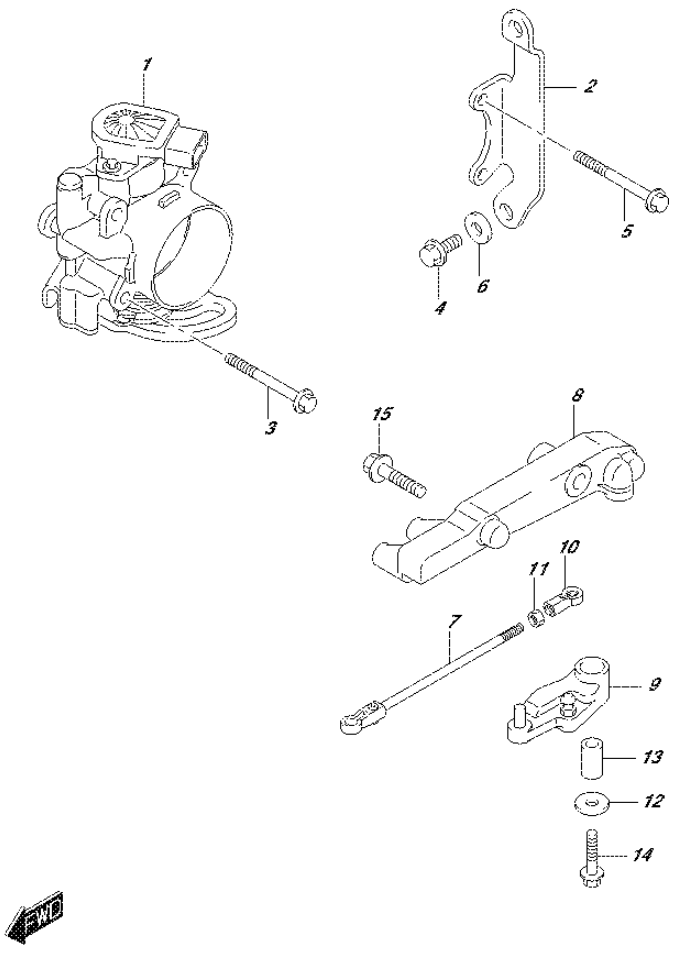

FIG.163C (1-G-12) THROTTLE BODY (DF70ATH E01)

REF NO.	PART NO.	DESCRIPTION	Q'TY	REMARKS
1	13300-87L00	BODY ASSY, THROTTLE	1	
2	13315-87L00	BRACKET, THROTTLE BODY	1	
3	01550-06507	BOLT	2	
4	01550-06167	BOLT	3	
5	01550-06557	BOLT	2	
6	09160-06084	WASHER (6.5X18X1.6)	1	
7	13510-87L00	ROD, THROTTLE	1	
8	19115-87L00	HOLDER, THROTTLE LEVER	1	
9	19120-87L10	LEVER, THROTTLE	1	
10	19131-95502	CONNECTOR, THROTTLE ROD	1	
11	09140-05005	NUT	1	
12	09160-06046	WASHER (6.5X20X1.5)	1	
13	09180-06186	SPACER (6.2X12.6X21)	1	
14	01550-06357	BOLT	1	
15	01550-08307	BOLT	2	

FIG.163D

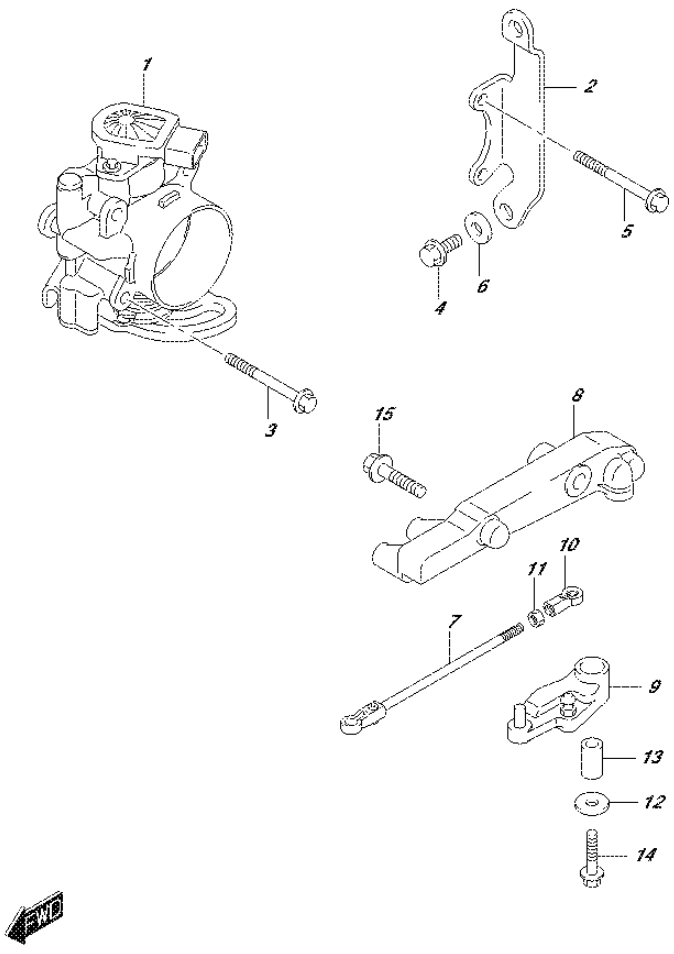

FIG.163D (1-G-13) THROTTLE BODY (DF70ATH E40)

REF NO.	PART NO.	DESCRIPTION	Q'TY	REMARKS
1	13300-87L00	BODY ASSY, THROTTLE	1	
2	13315-87L00	BRACKET, THROTTLE BODY	1	
3	01550-06507	BOLT	2	
4	01550-06167	BOLT	3	
5	01550-06557	BOLT	2	
6	09160-06084	WASHER (6.5X18X1.6)	1	
7	13510-87L00	ROD, THROTTLE	1	
8	19115-87L00	HOLDER, THROTTLE LEVER	1	
9	19120-87L10	LEVER, THROTTLE	1	
10	19131-95502	CONNECTOR, THROTTLE ROD	1	
11	09140-05005	NUT	1	
12	09160-06046	WASHER (6.5X20X1.5)	1	
13	09180-06186	SPACER (6.2X12.6X21)	1	
14	01550-06357	BOLT	1	
15	01550-08307	BOLT	2	

FIG.163E

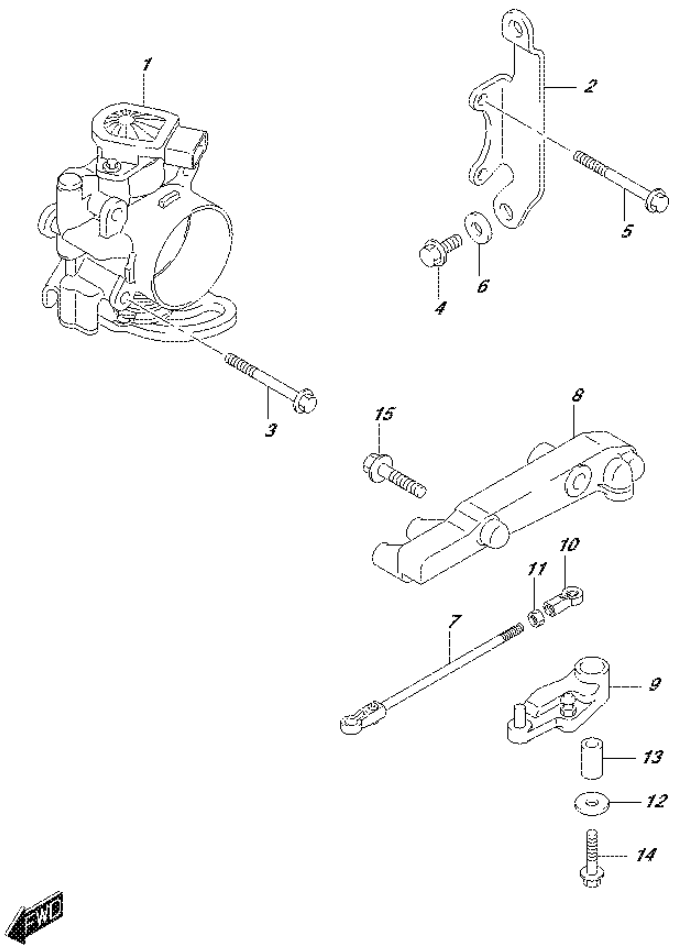

FIG.163E (1-G-14) THROTTLE BODY (DF80A E01)

REF NO.	PART NO.	DESCRIPTION	Q'TY	REMARKS
1	13300-87L00	BODY ASSY, THROTTLE	1	
2	13315-87L00	BRACKET, THROTTLE BODY	1	
3	01550-06507	BOLT	2	
4	01550-06167	BOLT	3	
5	01550-06557	BOLT	2	
6	09160-06084	WASHER (6.5X18X1.6)	1	
7	13510-87L00	ROD, THROTTLE	1	
8	19115-87L00	HOLDER, THROTTLE LEVER	1	
9	19120-87L00	LEVER, THROTTLE	1	
10	19131-95502	CONNECTOR, THROTTLE ROD	1	
11	09140-05005	NUT	1	
12	09160-06046	WASHER (6.5X20X1.5)	1	
13	09180-06186	SPACER (6.2X12.6X21)	1	
14	01550-06357	BOLT	1	
15	01550-08307	BOLT	2	

FIG.163F

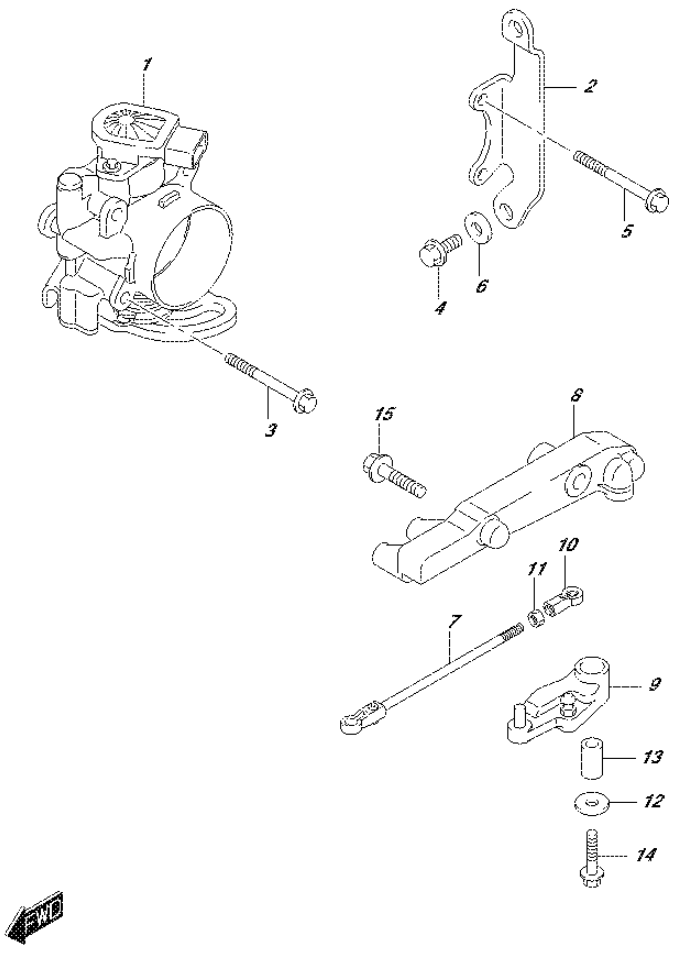

FIG.163F (1-G-15) THROTTLE BODY (DF80A E40)

REF NO.	PART NO.	DESCRIPTION	Q'TY	REMARKS
1	13300-87L00	BODY ASSY, THROTTLE	1	
2	13315-87L00	BRACKET, THROTTLE BODY	1	
3	01550-06507	BOLT	2	
4	01550-06167	BOLT	3	
5	01550-06557	BOLT	2	
6	09160-06084	WASHER (6.5X18X1.6)	1	
7	13510-87L00	ROD, THROTTLE	1	
8	19115-87L00	HOLDER, THROTTLE LEVER	1	
9	19120-87L00	LEVER, THROTTLE	1	
10	19131-95502	CONNECTOR, THROTTLE ROD	1	
11	09140-05005	NUT	1	
12	09160-06046	WASHER (6.5X20X1.5)	1	
13	09180-06186	SPACER (6.2X12.6X21)	1	
14	01550-06357	BOLT	1	
15	01550-08307	BOLT	2	

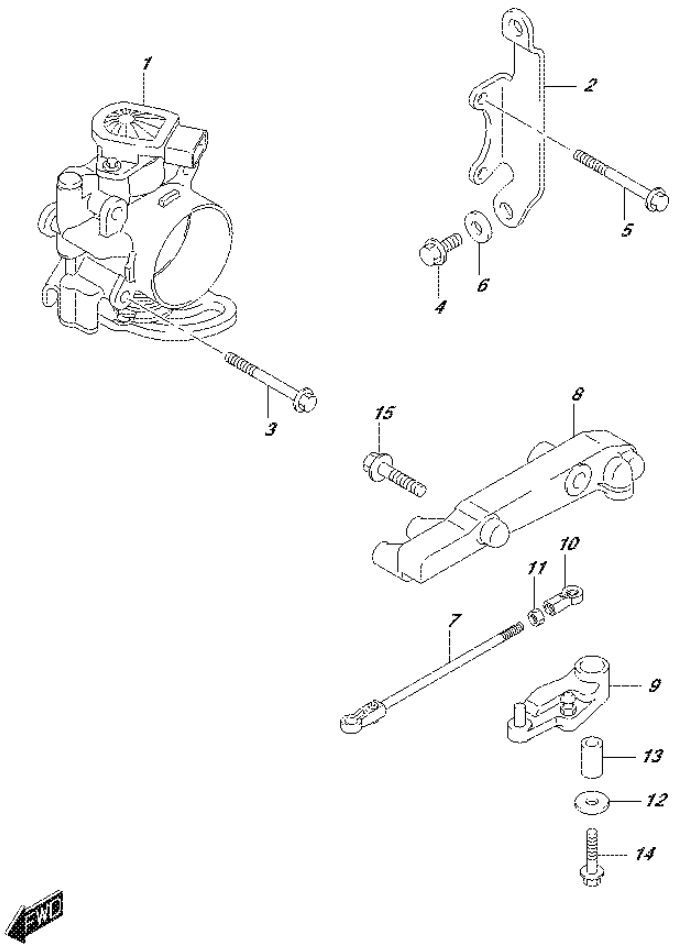

FIG.163G (1-H-2) THROTTLE BODY (DF90A E01)

REF NO.	PART NO.	DESCRIPTION	Q'TY	REMARKS
1	13300-87L00	BODY ASSY, THROTTLE	1	
2	13315-87L00	BRACKET, THROTTLE BODY	1	
3	01550-06507	BOLT	2	
4	01550-06167	BOLT	3	
5	01550-06557	BOLT	2	
6	09160-06084	WASHER (6.5X18X1.6)	1	
7	13510-87L00	ROD, THROTTLE	1	
8	19115-87L00	HOLDER, THROTTLE LEVER	1	
9	19120-87L00	LEVER, THROTTLE	1	
10	19131-95502	CONNECTOR, THROTTLE ROD	1	
11	09140-05005	NUT	1	
12	09160-06046	WASHER (6.5X20X1.5)	1	
13	09180-06186	SPACER (6.2X12.6X21)	1	
14	01550-06357	BOLT	1	
15	01550-08307	BOLT	2	

FIG.163H

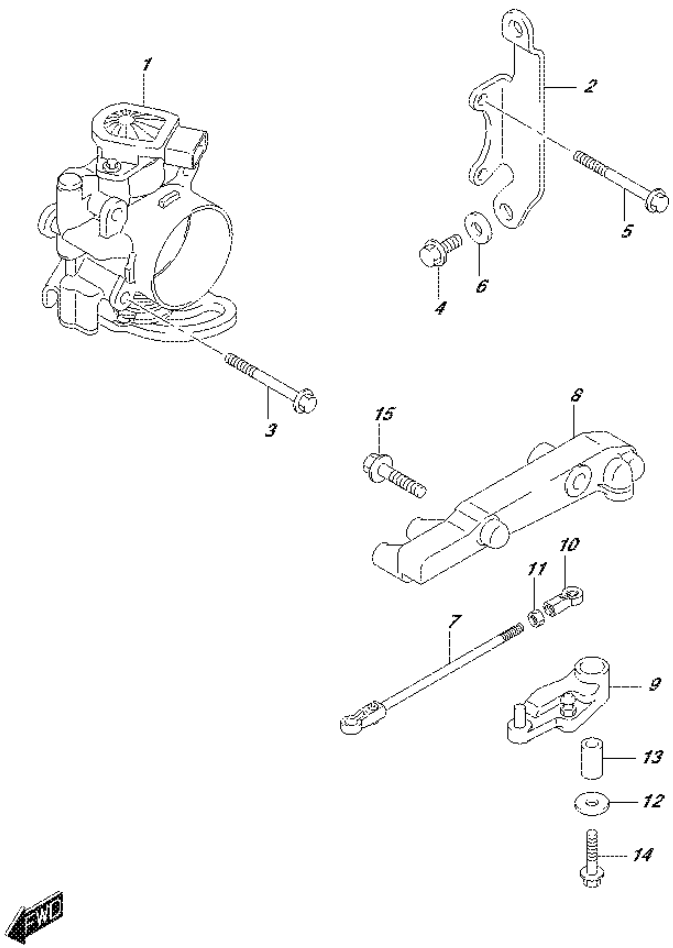

FIG.163H (1-H-3) THROTTLE BODY (DF90A E40)

REF NO.	PART NO.	DESCRIPTION	Q'TY	REMARKS
1	13300-87L00	BODY ASSY, THROTTLE	1	
2	13315-87L00	BRACKET, THROTTLE BODY	1	
3	01550-06507	BOLT	2	
4	01550-06167	BOLT	3	
5	01550-06557	BOLT	2	
6	09160-06084	WASHER (6.5X18X1.6)	1	
7	13510-87L00	ROD, THROTTLE	1	
8	19115-87L00	HOLDER, THROTTLE LEVER	1	
9	19120-87L00	LEVER, THROTTLE	1	
10	19131-95502	CONNECTOR, THROTTLE ROD	1	
11	09140-05005	NUT	1	
12	09160-06046	WASHER (6.5X20X1.5)	1	
13	09180-06186	SPACER (6.2X12.6X21)	1	
14	01550-06357	BOLT	1	
15	01550-08307	BOLT	2	

FIG. 163J

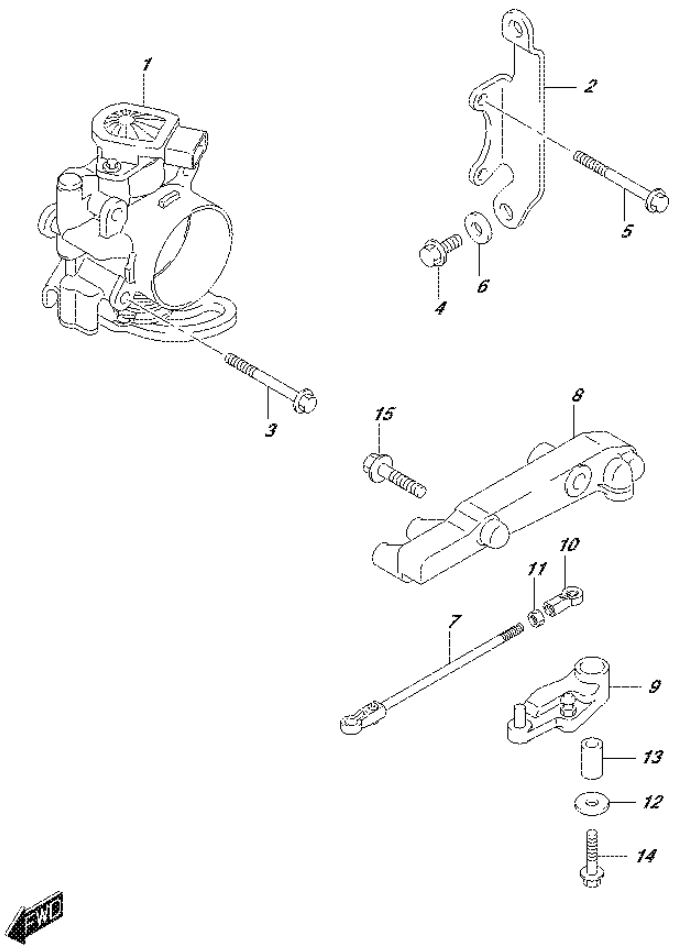

FIG.163J (1-H-4) THROTTLE BODY (DF90ATH E01)

REF NO.	PART NO.	DESCRIPTION	Q'TY	REMARKS
1	13300-87L00	BODY ASSY, THROTTLE	1	
2	13315-87L00	BRACKET, THROTTLE BODY	1	
3	01550-06507	BOLT	2	
4	01550-06167	BOLT	3	
5	01550-06557	BOLT	2	
6	09160-06084	WASHER (6.5X18X1.6)	1	
7	13510-87L00	ROD, THROTTLE	1	
8	19115-87L00	HOLDER, THROTTLE LEVER	1	
9	19120-87L10	LEVER, THROTTLE	1	
10	19131-95502	CONNECTOR, THROTTLE ROD	1	
11	09140-05005	NUT	1	
12	09160-06046	WASHER (6.5X20X1.5)	1	
13	09180-06186	SPACER (6.2X12.6X21)	1	
14	01550-06357	BOLT	1	
15	01550-08307	BOLT	2	

FIG. 163K

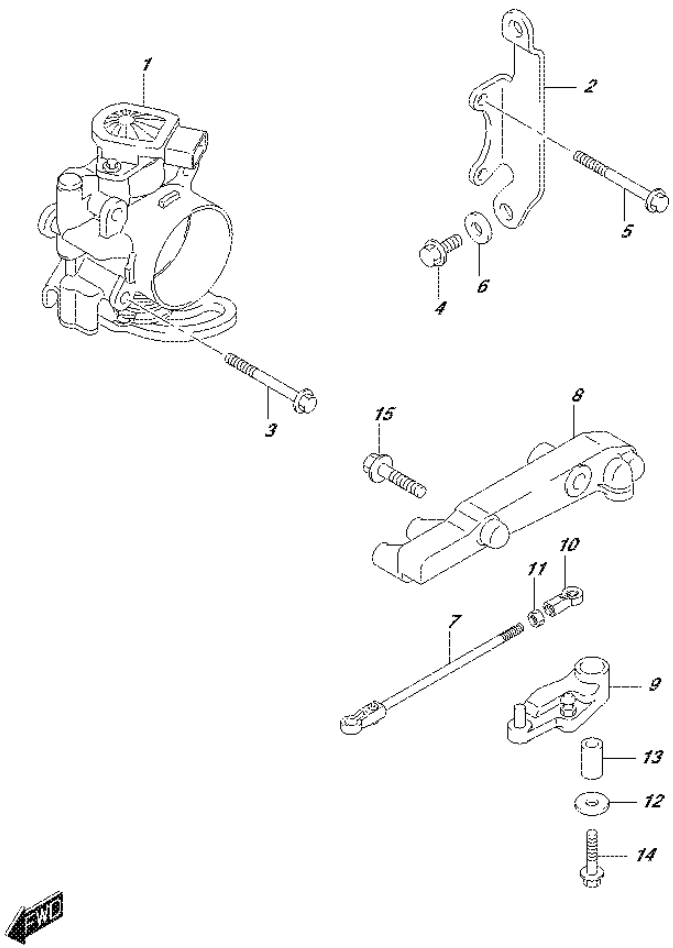

FIG.163K (1-H-5) THROTTLE BODY (DF90ATH E40)

REF NO.	PART NO.	DESCRIPTION	Q'TY	REMARKS
1	13300-87L00	BODY ASSY, THROTTLE	1	
2	13315-87L00	BRACKET, THROTTLE BODY	1	
3	01550-06507	BOLT	2	
4	01550-06167	BOLT	3	
5	01550-06557	BOLT	2	
6	09160-06084	WASHER (6.5X18X1.6)	1	
7	13510-87L00	ROD, THROTTLE	1	
8	19115-87L00	HOLDER, THROTTLE LEVER	1	
9	19120-87L10	LEVER, THROTTLE	1	
10	19131-95502	CONNECTOR, THROTTLE ROD	1	
11	09140-05005	NUT	1	
12	09160-06046	WASHER (6.5X20X1.5)	1	
13	09180-06186	SPACER (6.2X12.6X21)	1	
14	01550-06357	BOLT	1	
15	01550-08307	BOLT	2	

FIG.175A

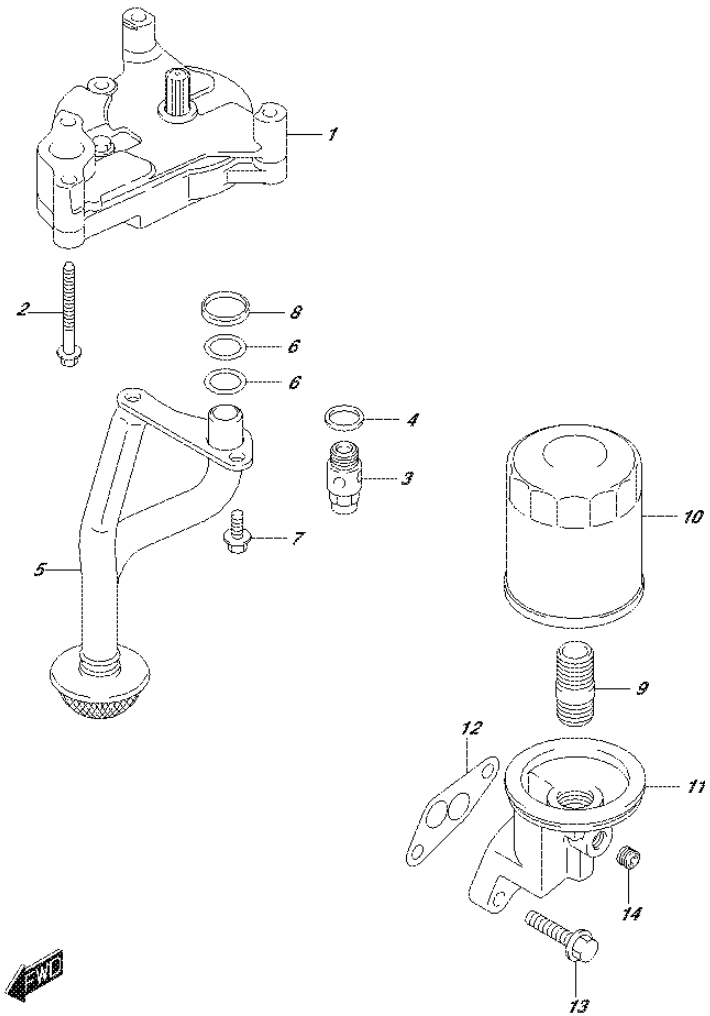

FIG.175A (1-H-6) OIL PUMP

REF NO.	PART NO.	DESCRIPTION	Q'TY	REMARKS
1	16400-87L00	PUMP ASSY, OIL	1	
2	09103-06220	BOLT (6X60)	4	
3	16440-99E00	VALVE ASSY, OIL RELIEF	1	
4	09168-16002	GASKET (16X22X2)	1	
5	16520-87L00	STRAINER, OIL PUMP	1	
6	09280-17002	O RING (D:2.4,ID:16.8)	2	
7	01550-0616A	BOLT	2	
8	16519-87L00	SEAL, ENGINE HOLDER	1	
9	11241-73003	STAND, OIL FILTER	1	
10	16510-61A31	FILTER ASSY, OIL	1	
11	16531-87L00	CASE, OIL FILTER ADAPTER	1	
12	16539-87L00	GASKET, ADAPTER CASE	1	
13	01550-08307	BOLT	2	
14	09246-05006	PLUG (1/8PT,H:5.5)	1	

FIG.180A

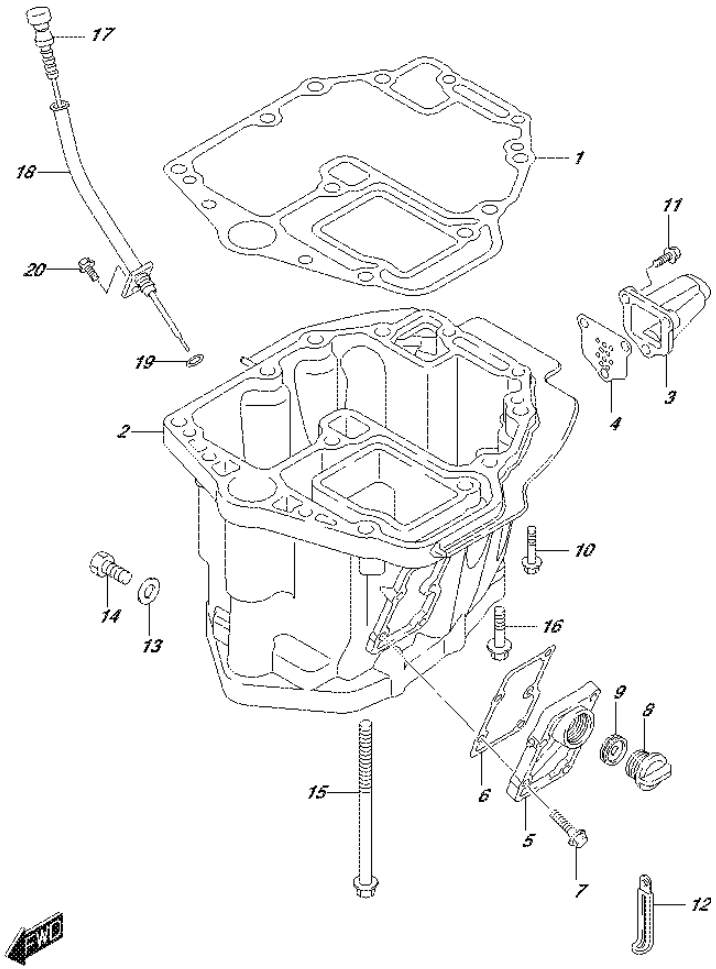

FIG.180A (1-H-7) OIL PAN (DF70A E01)

REF NO.	PART NO.	DESCRIPTION	Q'TY	REMARKS
1	11489-87L00	GASKET, OIL PAN	1	
2-1	11501-87L10-0EP	PAN, OIL (BLACK)	1	
2-2	11501-87L10-Y5S	PAN, OIL (WHITE)	1	
3-1	11541-87L00-0EP	PIPE, EXHAUST (BLACK)	1	
3-2	11541-87L00-Y5S	PIPE, EXHAUST (WHITE)	1	
4	11542-87L00	GASKET, EXHAUST TUBE	1	
5-1	11551-87L00-0EP	COVER, WATER JACKET OIL PAN (BLACK)	1	
5-2	11551-87L00-Y5S	COVER, WATER JACKET OIL PAN (WHITE)	1	
6	11552-87L00	GASKET, OIL PAN WTR JKT COV	1	
7	09116-06121	BOLT (6X25)	5	
8	17913-93J00	PLUG, WATER	1	
9	17914-93J00	GASKET, WATER PLUG	1	
10	09116-08128	BOLT (8X40)	4	
11	29116-93J00	BOLT, EXHAUST PIPE	3	
12	29404-93J10	CLAMP, SPEEDOMETER HOSE	1	
13	09168-12012	GASKET (12.5X20X2.5)	1	
14	09248-12009	PLUG (12X18.65)	1	
15	09116-10129	BOLT (10X160)	6	
16	09116-10176	BOLT (10X44)	2	
17	16910-87L00	GAUGE, OIL LEVEL	1	
18	16930-87L00	GUIDE, OIL LEVEL GAUGE	1	
19	09280-09008	O RING (D:2.1,ID:8.8)	1	
20	01550-06127	BOLT	1	

FIG.180B

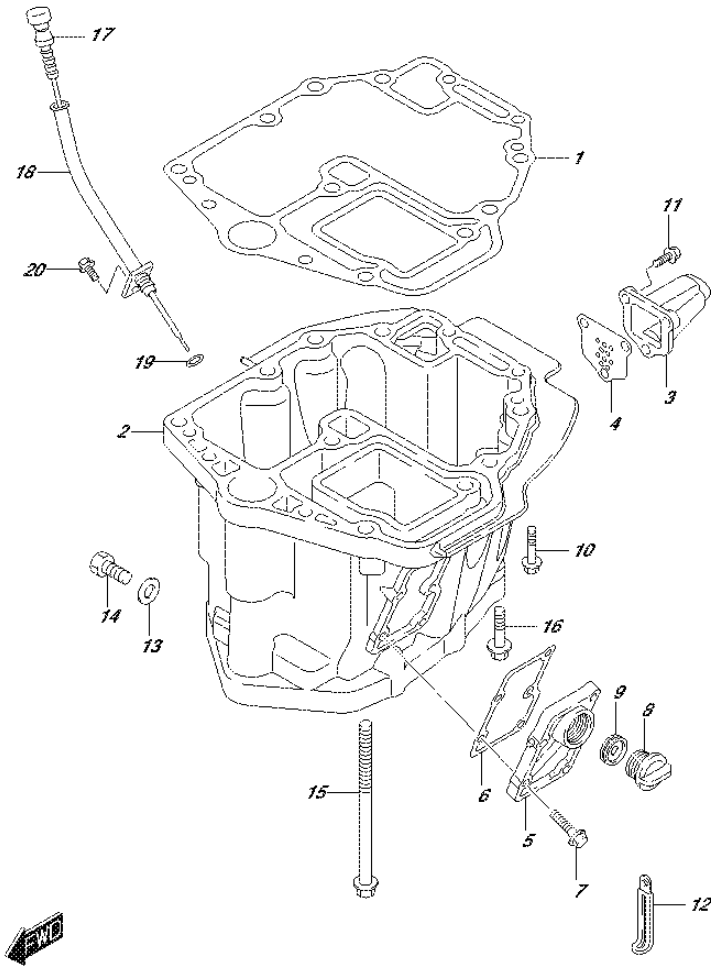

FIG.180B (1-H-8) OIL PAN (DF70A E40)

REF NO.	PART NO.	DESCRIPTION	Q'TY	REMARKS
1	11489-87L00	GASKET, OIL PAN	1	
2-1	11501-87L10-0EP	PAN, OIL (BLACK)	1	
2-2	11501-87L10-Y5S	PAN, OIL (WHITE)	1	
3-1	11541-87L00-0EP	PIPE, EXHAUST (BLACK)	1	
3-2	11541-87L00-Y5S	PIPE, EXHAUST (WHITE)	1	
4	11542-87L00	GASKET, EXHAUST TUBE	1	
5-1	11551-87L00-0EP	COVER, WATER JACKET OIL PAN (BLACK)	1	
5-2	11551-87L00-Y5S	COVER, WATER JACKET OIL PAN (WHITE)	1	
6	11552-87L00	GASKET, OIL PAN WTR JKT COV	1	
7	09116-06121	BOLT (6X25)	5	
8	17913-93J00	PLUG, WATER	1	
9	17914-93J00	GASKET, WATER PLUG	1	
10	09116-08128	BOLT (8X40)	4	
11	29116-93J00	BOLT, EXHAUST PIPE	3	
12	29404-93J10	CLAMP, SPEEDOMETER HOSE	1	
13	09168-12012	GASKET (12.5X20X2.5)	1	
14	09248-12009	PLUG (12X18.65)	1	
15	09116-10129	BOLT (10X160)	6	
16	09116-10176	BOLT (10X44)	2	
17	16910-87L00	GAUGE, OIL LEVEL	1	
18	16930-87L00	GUIDE, OIL LEVEL GAUGE	1	
19	09280-09008	O RING (D:2.1,ID:8.8)	1	
20	01550-06127	BOLT	1	

FIG.180C

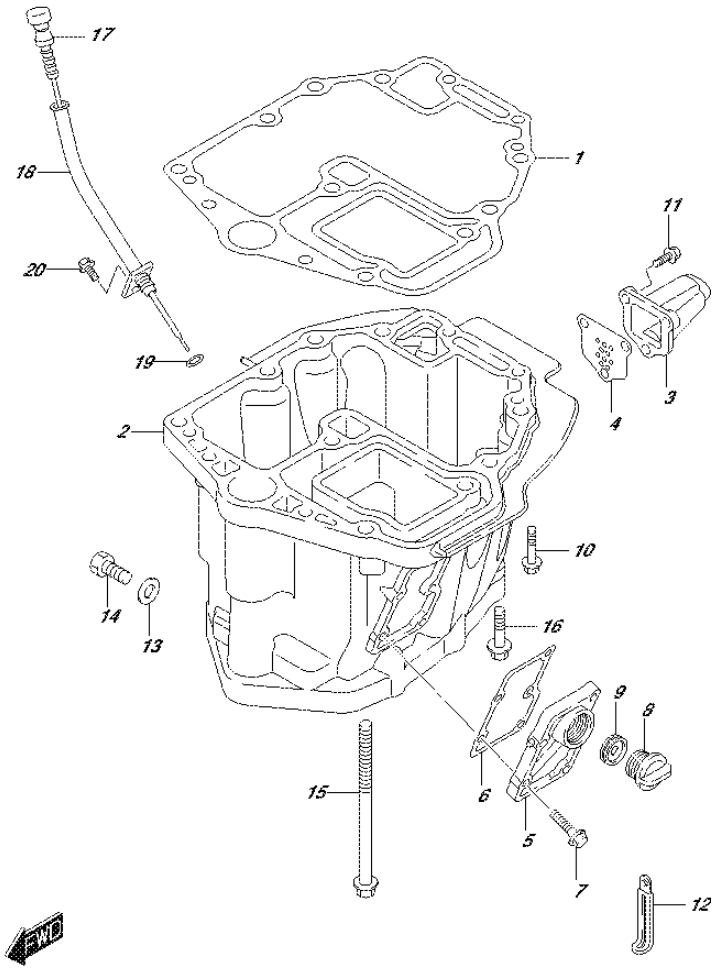

FIG.180C (1-H-9) OIL PAN (DF70ATH E01)

REF NO.	PART NO.	DESCRIPTION	Q'TY	REMARKS
1	11489-87L00	GASKET, OIL PAN	1	
2	11501-87L10-0EP	PAN, OIL (BLACK)	1	
3	11541-87L00-0EP	PIPE, EXHAUST (BLACK)	1	
4	11542-87L00	GASKET, EXHAUST TUBE	1	
5	11551-87L00-0EP	COVER, WATER JACKET OIL PAN (BLACK)	1	
6	11552-87L00	GASKET, OIL PAN WTR JKT COV	1	
7	09116-06121	BOLT (6X25)	5	
8	17913-93J00	PLUG, WATER	1	
9	17914-93J00	GASKET, WATER PLUG	1	
10	09116-08128	BOLT (8X40)	4	
11	29116-93J00	BOLT, EXHAUST PIPE	3	
12	29404-93J10	CLAMP, SPEEDOMETER HOSE	1	
13	09168-12012	GASKET (12.5X20X2.5)	1	
14	09248-12009	PLUG (12X18.65)	1	
15	09116-10129	BOLT (10X160)	6	
16	09116-10176	BOLT (10X44)	2	
17	16910-87L00	GAUGE, OIL LEVEL	1	
18	16930-87L00	GUIDE, OIL LEVEL GAUGE	1	
19	09280-09008	O RING (D:2.1,ID:8.8)	1	
20	01550-06127	BOLT	1	

FIG.180D

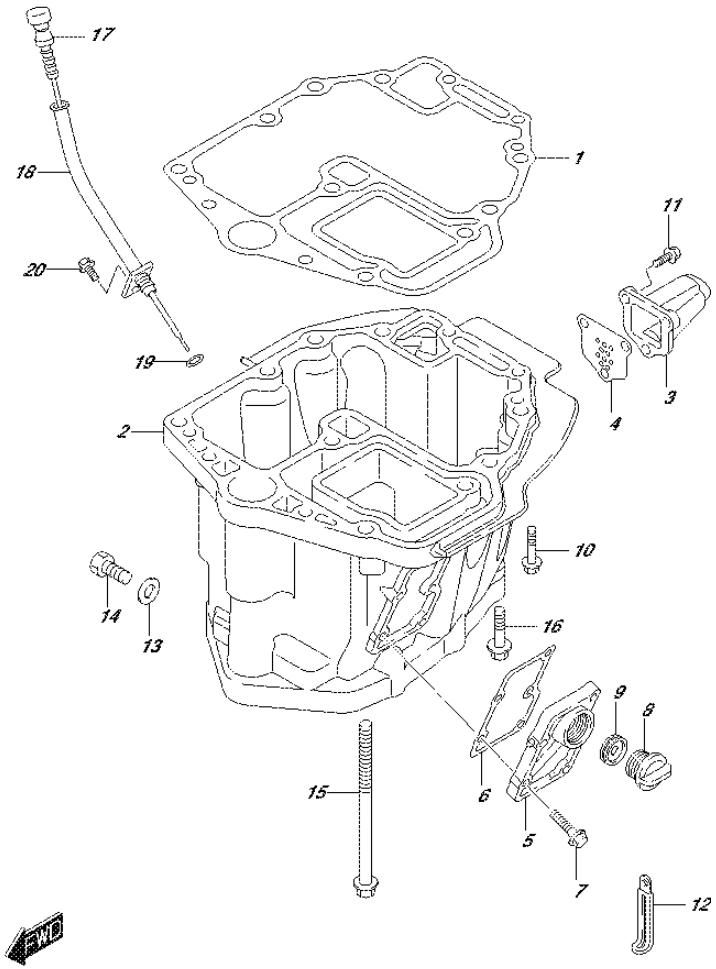

FIG.180D (1-H-10) OIL PAN (DF70ATH E40)

REF NO.	PART NO.	DESCRIPTION	Q'TY	REMARKS
1	11489-87L00	GASKET, OIL PAN	1	
2	11501-87L10-0EP	PAN, OIL (BLACK)	1	
3	11541-87L00-0EP	PIPE, EXHAUST (BLACK)	1	
4	11542-87L00	GASKET, EXHAUST TUBE	1	
5	11551-87L00-0EP	COVER, WATER JACKET OIL PAN (BLACK)	1	
6	11552-87L00	GASKET, OIL PAN WTR JKT COV	1	
7	09116-06121	BOLT (6X25)	5	
8	17913-93J00	PLUG, WATER	1	
9	17914-93J00	GASKET, WATER PLUG	1	
10	09116-08128	BOLT (8X40)	4	
11	29116-93J00	BOLT, EXHAUST PIPE	3	
12	29404-93J10	CLAMP, SPEEDOMETER HOSE	1	
13	09168-12012	GASKET (12.5X20X2.5)	1	
14	09248-12009	PLUG (12X18.65)	1	
15	09116-10129	BOLT (10X160)	6	
16	09116-10176	BOLT (10X44)	2	
17	16910-87L00	GAUGE, OIL LEVEL	1	
18	16930-87L00	GUIDE, OIL LEVEL GAUGE	1	
19	09280-09008	O RING (D:2.1,ID:8.8)	1	
20	01550-06127	BOLT	1	

FIG.180E

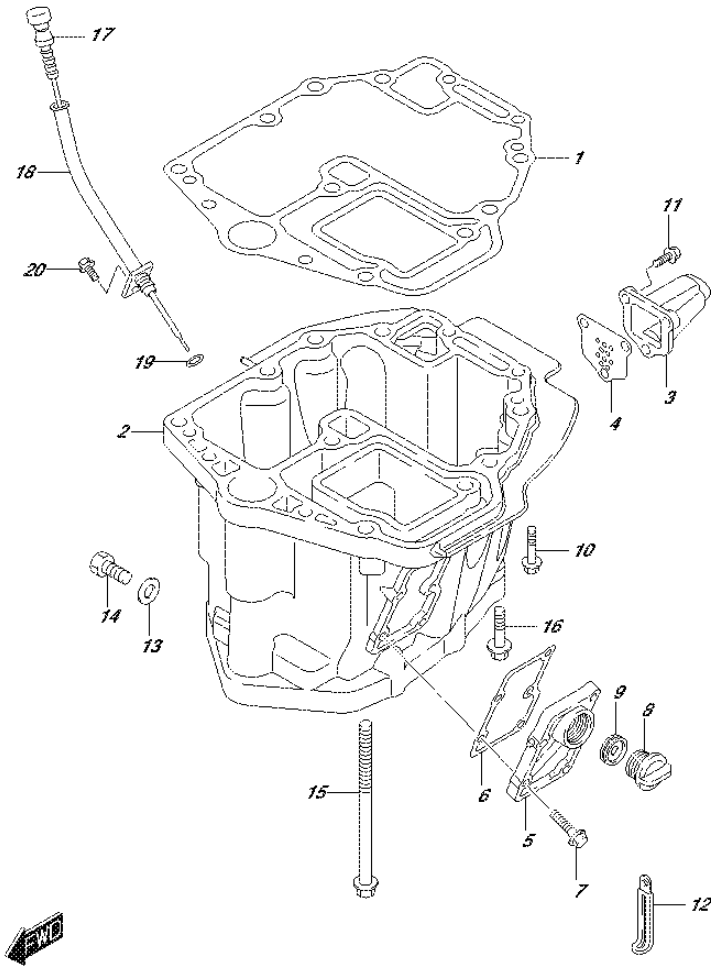

FIG.180E (1-H-11) OIL PAN (DF80A E01)

REF NO.	PART NO.	DESCRIPTION	Q'TY	REMARKS
1	11489-87L00	GASKET, OIL PAN	1	
2	11501-87L10-0EP	PAN, OIL (BLACK)	1	
3	11541-87L00-0EP	PIPE, EXHAUST (BLACK)	1	
4	11542-87L00	GASKET, EXHAUST TUBE	1	
5	11551-87L00-0EP	COVER, WATER JACKET OIL PAN (BLACK)	1	
6	11552-87L00	GASKET, OIL PAN WTR JKT COV	1	
7	09116-06121	BOLT (6X25)	5	
8	17913-93J00	PLUG, WATER	1	
9	17914-93J00	GASKET, WATER PLUG	1	
10	09116-08128	BOLT (8X40)	4	
11	29116-93J00	BOLT, EXHAUST PIPE	3	
12	29404-93J10	CLAMP, SPEEDOMETER HOSE	1	
13	09168-12012	GASKET (12.5X20X2.5)	1	
14	09248-12009	PLUG (12X18.65)	1	
15	09116-10129	BOLT (10X160)	6	
16	09116-10176	BOLT (10X44)	2	
17	16910-87L00	GAUGE, OIL LEVEL	1	
18	16930-87L00	GUIDE, OIL LEVEL GAUGE	1	
19	09280-09008	O RING (D:2.1,ID:8.8)	1	
20	01550-06127	BOLT	1	

FIG.180F

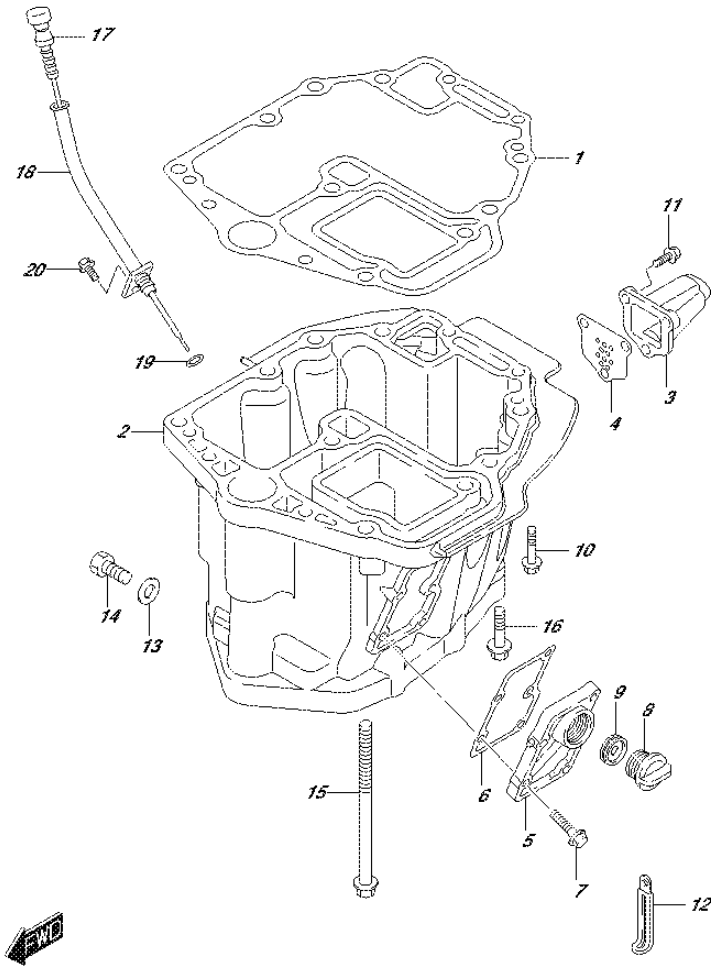

FIG.180F (1-H-12) OIL PAN (DF80A E40)

REF NO.	PART NO.	DESCRIPTION	Q'TY	REMARKS
1	11489-87L00	GASKET, OIL PAN	1	
2	11501-87L10-0EP	PAN, OIL (BLACK)	1	
3	11541-87L00-0EP	PIPE, EXHAUST (BLACK)	1	
4	11542-87L00	GASKET, EXHAUST TUBE	1	
5	11551-87L00-0EP	COVER, WATER JACKET OIL PAN (BLACK)	1	
6	11552-87L00	GASKET, OIL PAN WTR JKT COV	1	
7	09116-06121	BOLT (6X25)	5	
8	17913-93J00	PLUG, WATER	1	
9	17914-93J00	GASKET, WATER PLUG	1	
10	09116-08128	BOLT (8X40)	4	
11	29116-93J00	BOLT, EXHAUST PIPE	3	
12	29404-93J10	CLAMP, SPEEDOMETER HOSE	1	
13	09168-12012	GASKET (12.5X20X2.5)	1	
14	09248-12009	PLUG (12X18.65)	1	
15	09116-10129	BOLT (10X160)	6	
16	09116-10176	BOLT (10X44)	2	
17	16910-87L00	GAUGE, OIL LEVEL	1	
18	16930-87L00	GUIDE, OIL LEVEL GAUGE	1	
19	09280-09008	O RING (D:2.1,ID:8.8)	1	
20	01550-06127	BOLT	1	

FIG.180G

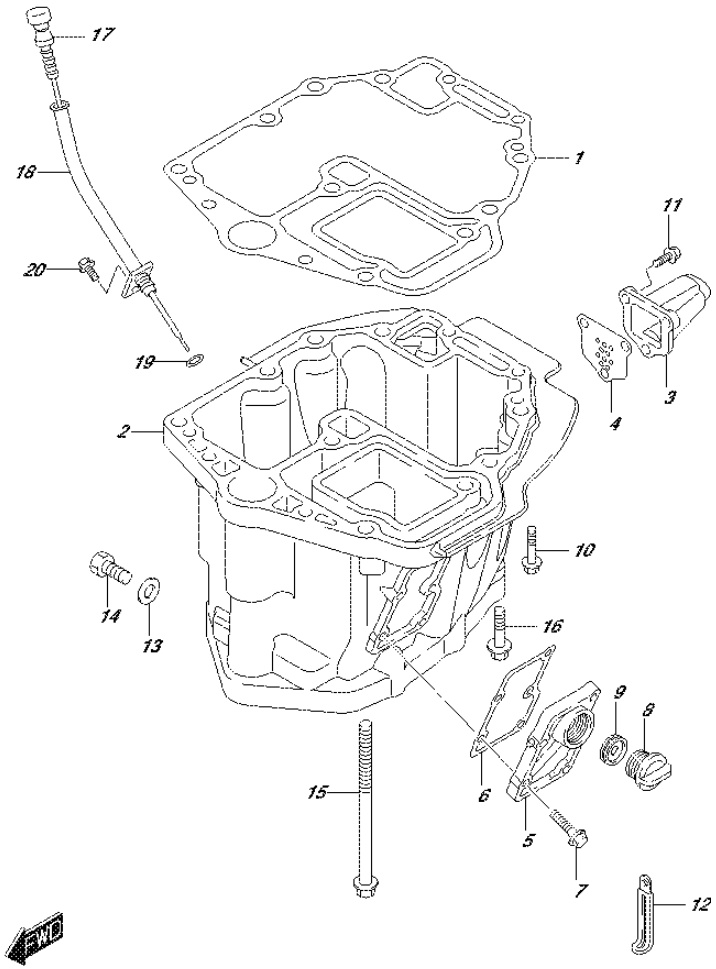

FIG.180G (1-H-13) OIL PAN (DF90A E01)

REF NO.	PART NO.	DESCRIPTION	Q'TY	REMARKS
1	11489-87L00	GASKET, OIL PAN	1	
2-1	11501-87L10-0EP	PAN, OIL (BLACK)	1	
2-2	11501-87L10-Y5S	PAN, OIL (WHITE)	1	
3-1	11541-87L00-0EP	PIPE, EXHAUST (BLACK)	1	
3-2	11541-87L00-Y5S	PIPE, EXHAUST (WHITE)	1	
4	11542-87L00	GASKET, EXHAUST TUBE	1	
5-1	11551-87L00-0EP	COVER, WATER JACKET OIL PAN (BLACK)	1	
5-2	11551-87L00-Y5S	COVER, WATER JACKET OIL PAN (WHITE)	1	
6	11552-87L00	GASKET, OIL PAN WTR JKT COV	1	
7	09116-06121	BOLT (6X25)	5	
8	17913-93J00	PLUG, WATER	1	
9	17914-93J00	GASKET, WATER PLUG	1	
10	09116-08128	BOLT (8X40)	4	
11	29116-93J00	BOLT, EXHAUST PIPE	3	
12	29404-93J10	CLAMP, SPEEDOMETER HOSE	1	
13	09168-12012	GASKET (12.5X20X2.5)	1	
14	09248-12009	PLUG (12X18.65)	1	
15	09116-10129	BOLT (10X160)	6	
16	09116-10176	BOLT (10X44)	2	
17	16910-87L00	GAUGE, OIL LEVEL	1	
18	16930-87L00	GUIDE, OIL LEVEL GAUGE	1	
19	09280-09008	O RING (D:2.1,ID:8.8)	1	
20	01550-06127	BOLT	1	

FIG.180H

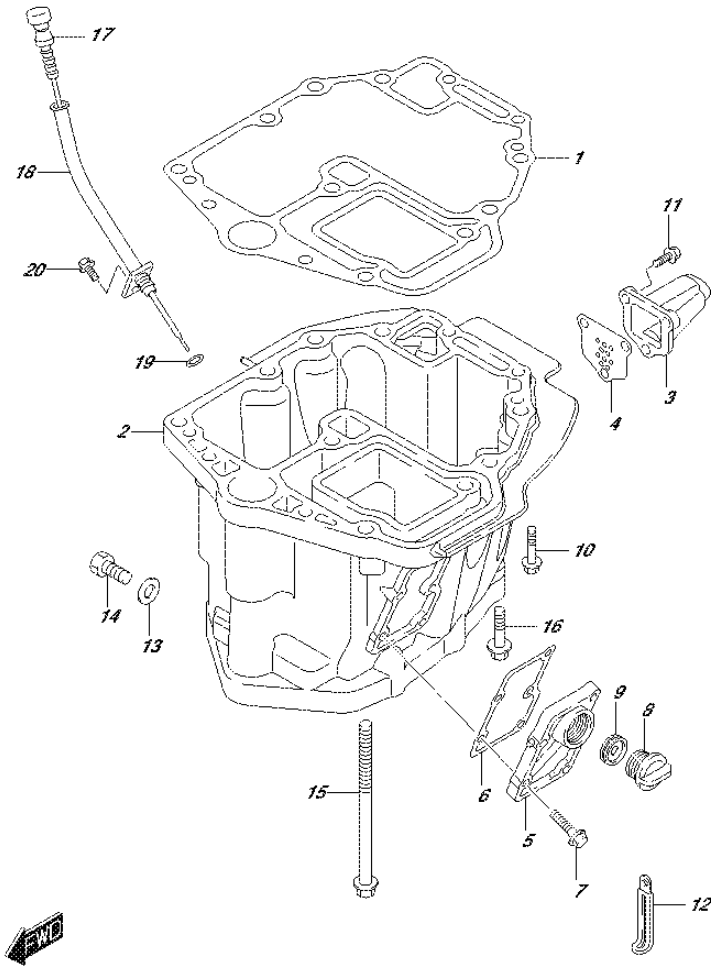

FIG.180H (1-H-14) OIL PAN (DF90A E40)

REF NO.	PART NO.	DESCRIPTION	Q'TY	REMARKS
1	11489-87L00	GASKET, OIL PAN	1	
2-1	11501-87L10-0EP	PAN, OIL (BLACK)	1	
2-2	11501-87L10-Y5S	PAN, OIL (WHITE)	1	
3-1	11541-87L00-0EP	PIPE, EXHAUST (BLACK)	1	
3-2	11541-87L00-Y5S	PIPE, EXHAUST (WHITE)	1	
4	11542-87L00	GASKET, EXHAUST TUBE	1	
5-1	11551-87L00-0EP	COVER, WATER JACKET OIL PAN (BLACK)	1	
5-2	11551-87L00-Y5S	COVER, WATER JACKET OIL PAN (WHITE)	1	
6	11552-87L00	GASKET, OIL PAN WTR JKT COV	1	
7	09116-06121	BOLT (6X25)	5	
8	17913-93J00	PLUG, WATER	1	
9	17914-93J00	GASKET, WATER PLUG	1	
10	09116-08128	BOLT (8X40)	4	
11	29116-93J00	BOLT, EXHAUST PIPE	3	
12	29404-93J10	CLAMP, SPEEDOMETER HOSE	1	
13	09168-12012	GASKET (12.5X20X2.5)	1	
14	09248-12009	PLUG (12X18.65)	1	
15	09116-10129	BOLT (10X160)	6	
16	09116-10176	BOLT (10X44)	2	
17	16910-87L00	GAUGE, OIL LEVEL	1	
18	16930-87L00	GUIDE, OIL LEVEL GAUGE	1	
19	09280-09008	O RING (D:2.1,ID:8.8)	1	
20	01550-06127	BOLT	1	

FIG.180J

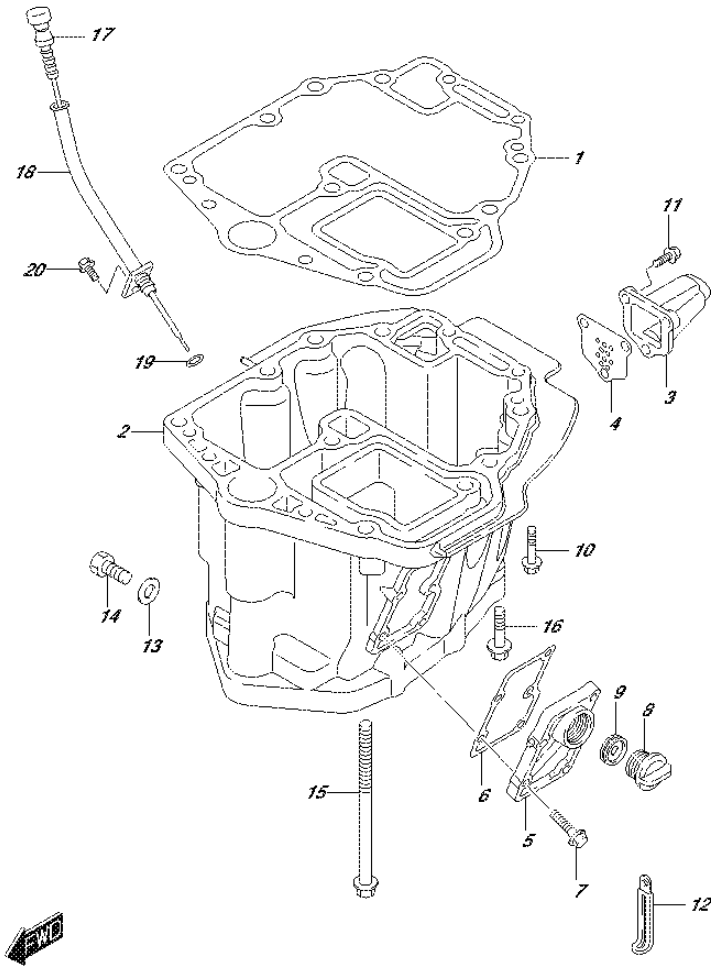

FIG.180J (1-H-15) OIL PAN (DF90ATH E01)

REF NO.	PART NO.	DESCRIPTION	Q'TY	REMARKS
1	11489-87L00	GASKET, OIL PAN	1	
2	11501-87L10-0EP	PAN, OIL (BLACK)	1	
3	11541-87L00-0EP	PIPE, EXHAUST (BLACK)	1	
4	11542-87L00	GASKET, EXHAUST TUBE	1	
5	11551-87L00-0EP	COVER, WATER JACKET OIL PAN (BLACK)	1	
6	11552-87L00	GASKET, OIL PAN WTR JKT COV	1	
7	09116-06121	BOLT (6X25)	5	
8	17913-93J00	PLUG, WATER	1	
9	17914-93J00	GASKET, WATER PLUG	1	
10	09116-08128	BOLT (8X40)	4	
11	29116-93J00	BOLT, EXHAUST PIPE	3	
12	29404-93J10	CLAMP, SPEEDOMETER HOSE	1	
13	09168-12012	GASKET (12.5X20X2.5)	1	
14	09248-12009	PLUG (12X18.65)	1	
15	09116-10129	BOLT (10X160)	6	
16	09116-10176	BOLT (10X44)	2	
17	16910-87L00	GAUGE, OIL LEVEL	1	
18	16930-87L00	GUIDE, OIL LEVEL GAUGE	1	
19	09280-09008	O RING (D:2.1,ID:8.8)	1	
20	01550-06127	BOLT	1	

FIG.180K

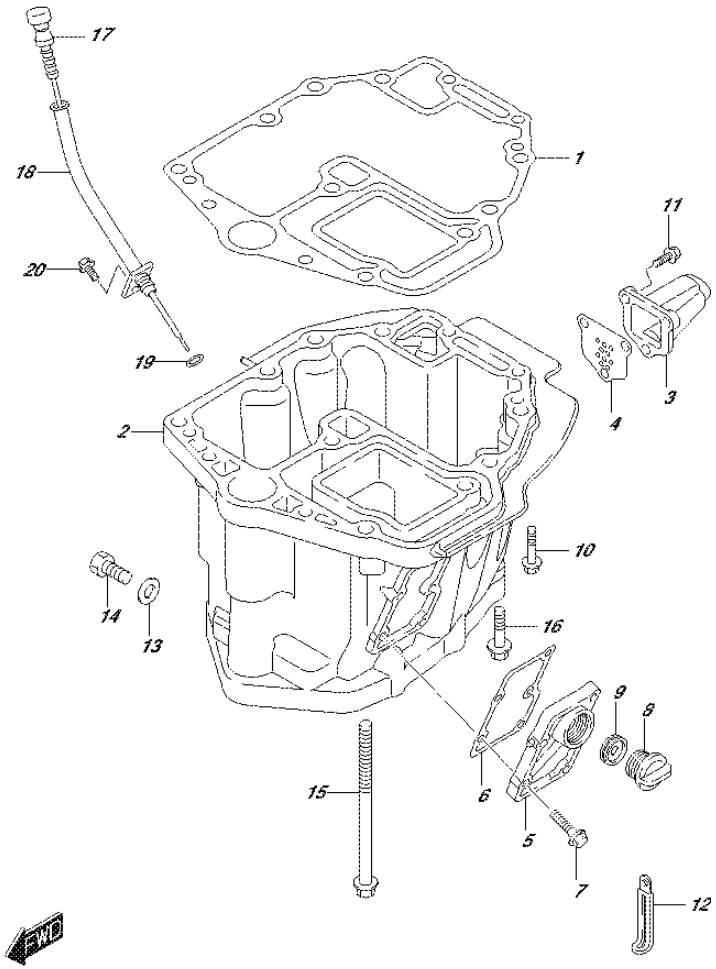

FIG.180K (1-I-2) OIL PAN (DF90ATH E40)

REF NO.	PART NO.	DESCRIPTION	Q'TY	REMARKS
1	11489-87L00	GASKET, OIL PAN	1	
2	11501-87L10-0EP	PAN, OIL (BLACK)	1	
3	11541-87L00-0EP	PIPE, EXHAUST (BLACK)	1	
4	11542-87L00	GASKET, EXHAUST TUBE	1	
5	11551-87L00-0EP	COVER, WATER JACKET OIL PAN (BLACK)	1	
6	11552-87L00	GASKET, OIL PAN WTR JKT COV	1	
7	09116-06121	BOLT (6X25)	5	
8	17913-93J00	PLUG, WATER	1	
9	17914-93J00	GASKET, WATER PLUG	1	
10	09116-08128	BOLT (8X40)	4	
11	29116-93J00	BOLT, EXHAUST PIPE	3	
12	29404-93J10	CLAMP, SPEEDOMETER HOSE	1	
13	09168-12012	GASKET (12.5X20X2.5)	1	
14	09248-12009	PLUG (12X18.65)	1	
15	09116-10129	BOLT (10X160)	6	
16	09116-10176	BOLT (10X44)	2	
17	16910-87L00	GAUGE, OIL LEVEL	1	
18	16930-87L00	GUIDE, OIL LEVEL GAUGE	1	
19	09280-09008	O RING (D:2.1,ID:8.8)	1	
20	01550-06127	BOLT	1	

FIG.204A

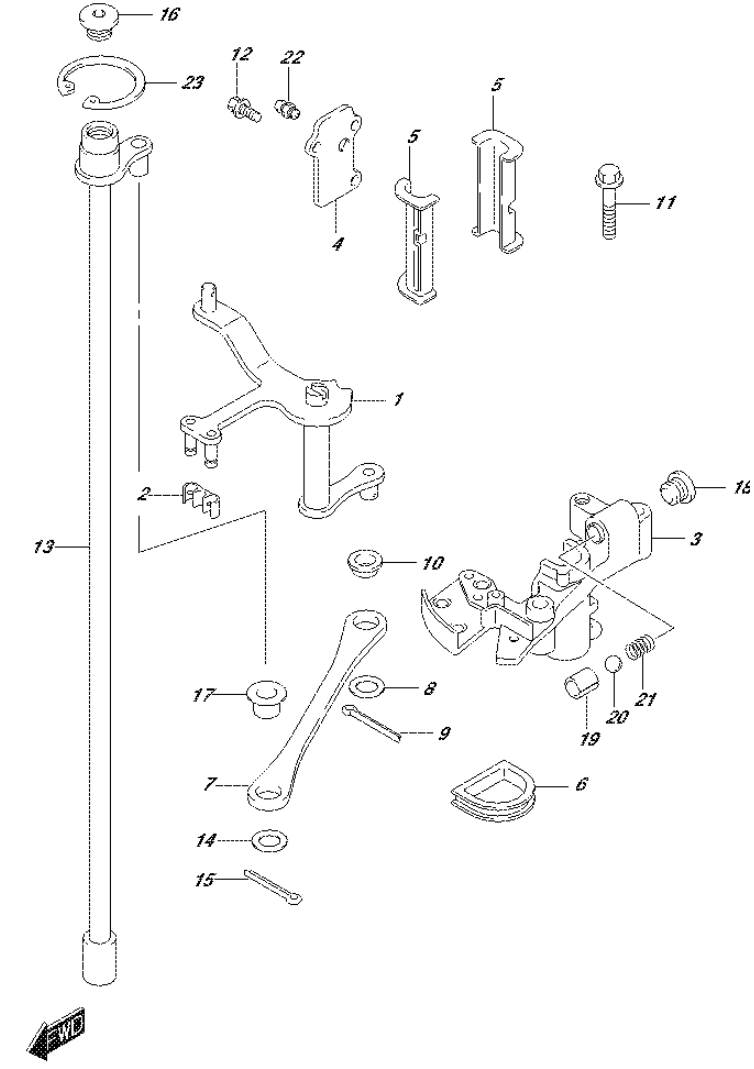

FIG.204A (1-I-3) CLUTCH SHAFT

REF NO.	PART NO.	DESCRIPTION	Q'TY	REMARKS
1	21110-87L00	LEVER, CLUTCH	1	
2	21131-93J00	BUSH, CLUTCH LEVER	1	
3	21151-87L00	HOLDER, CLUTCH LEVER	1	
4	21152-87L00	PLATE, CLUTCH HOLDER	1	
5	21153-87L00	BUSH, CLUTCH LEVER	2	
6	21157-87L00	SEAL, CLUTCH HOLDER	1	
7	23115-87L00	LINK, CLUTCH LEVER	1	
8	09160-09019	WASHER (9.2X16X1)	1	
9	09204-01006	PIN	1	
10	09307-09002	BUSH	1	
11	01550-06407	BOLT	2	
12	09116-05010	BOLT (5X12)	3	
13	21210-87L00	SHAFT, CLUTCH	1	
14	09160-09019	WASHER (9.2X16X1)	1	
15	09204-01006	PIN	1	
16	09248-12011	PLUG (12X9)	1	
17	09307-09002	BUSH	1	
18	11118-95J00	PLUG, NOTCH SPRING	1	
19	09205-10008	SPRING PIN (10.2X13)	1	
20	09260-10005	BALL	1	
21	09440-07071	SPRING	1	
22	22511-99011	NIPPLE, GREASE	1	
23	08331-41359	CIRCLIP	1	

FIG.206A

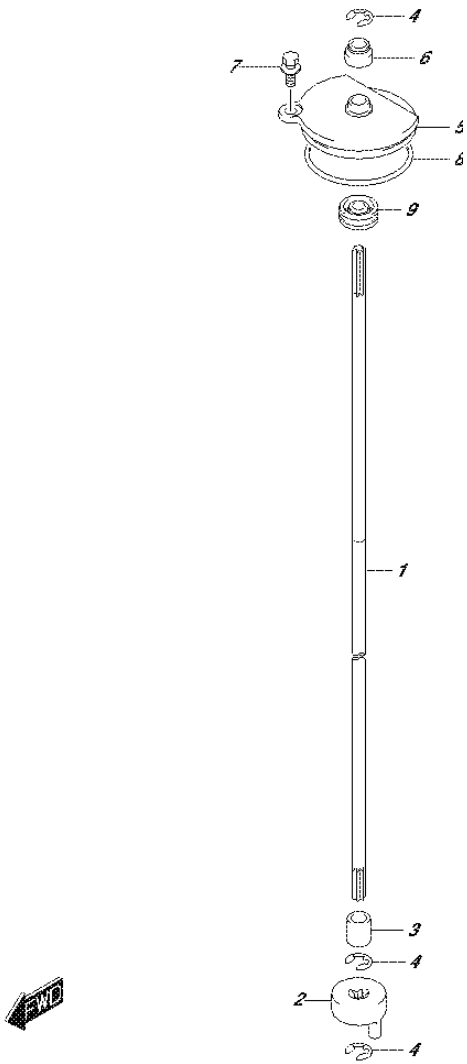

FIG.206A (1-I-4) CLUTCH ROD

REF NO.	PART NO.	DESCRIPTION	Q'TY	REMARKS
1-1	25111-87L00	ROD, SHIFT (L)	1	W/TRANSOM(L)
1-2	25111-87L10	ROD, SHIFT (X)	1	W/TRANSOM(X)
2	25131-87L01	YOKE, SHIFTER	1	
3	25232-96302	MAGNET, GEAR CASE	1	
4	08332-1107A	E RING	3	
5	25141-87L00	HOUSING, SHIFT ROD GUIDE	1	
6	25223-94400	COVER, GUIDE HSG OIL SEAL	1	
7	29116-93J00	BOLT, SHIFT ROD HSG (6X20)	1	
8	09280-55006	O RING (D:3.4 ID:53.4)	1	
9	09282-08005	OIL SEAL (8X22X7)	1	

FIG.220A

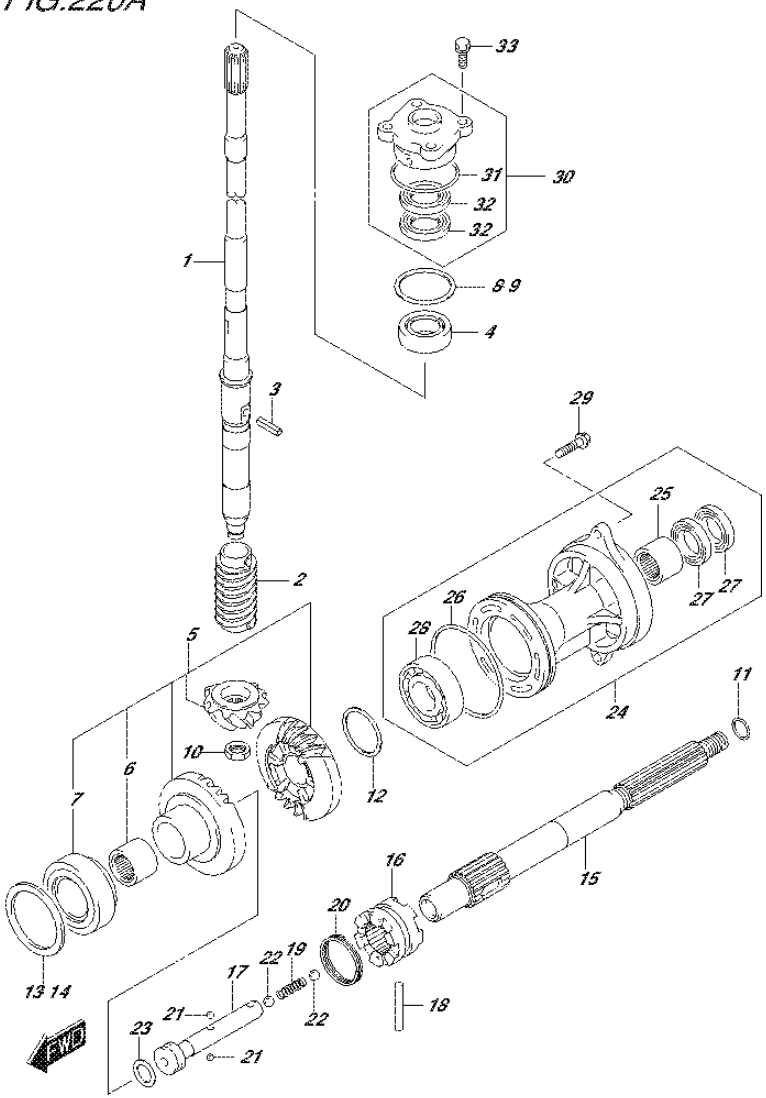

FIG.220A (1-I-5) TRANSMISSION (DF70A E01)

REF NO.	PART NO.	DESCRIPTION	Q'TY	REMARKS
1-1	57110-87L20	SHAFT ASSY, DRIVE (L)	1	W/TRANSOM(L)
1-2	57110-87L30	SHAFT ASSY, DRIVE (X)	1	W/TRANSOM(X)
2	57133-87L01	COLLAR, DRIVE SHAFT	1	
3	09205-05011	SPRING PIN (5X14)	1	
4	09265-25046	BEARING (25X52X19.25)	1	
5	57300-87880	PINION/GEAR SET	1	
6	09263-25067	.BEARING (25X32X26)	1	
7	09265-40003	.BEARING (40X75X26)	1	
8	57500-87873	SHIM SET, DRIVE SHAFT	1	
9-1	09181-40186	.SHIM (T:0.50)	1	
9-2	09181-41002	.SHIM (T:0.55)	1	
9-3	09181-41003	.SHIM (T:0.60)	1	
9-4	09181-41004	.SHIM (T:0.65)	1	
9-5	09181-41005	.SHIM (T:0.70)	1	
9-6	09181-41006	.SHIM (T:0.75)	1	
9-7	09181-40190	.SHIM (T:0.80)	1	
9-8	09181-41008	.SHIM (T:0.85)	1	
9-9	09181-41009	.SHIM (T:0.90)	1	
9-10	09181-41010	.SHIM (T:0.95)	1	
9-11	09181-40195	.SHIM (T:1.00)	1	
9-12	09181-41012	.SHIM (T:1.05)	1	
9-13	09181-41013	.SHIM (T:1.10)	1	
9-14	09181-41014	.SHIM (T:1.15)	1	
10	09140-14024	NUT	1	
11-1	09181-25130	SHIM (T:0.50)	1	PROP SHAFT REV THRUST
11-2	09181-25139	SHIM (T:1.00)	1	PROP SHAFT REV THRUST
11-3	09181-25143	SHIM (T:1.09)	1	PROP SHAFT REV THRUST
11-4	09181-25149	SHIM (T:1.21)	1	PROP SHAFT REV THRUST
11-5	09181-25153	SHIM (T:1.30)	1	PROP SHAFT REV THRUST
11-6	09181-25072	SHIM (T:1.40)	1	PROP SHAFT REV THRUST
11-7	09181-25073	SHIM (T:1.50)	1	PROP SHAFT REV THRUST
11-8	09181-25074	SHIM (T:1.60)	1	PROP SHAFT REV THRUST
11-9	09181-25075	SHIM (T:1.70)	1	PROP SHAFT REV THRUST

FIG.220A

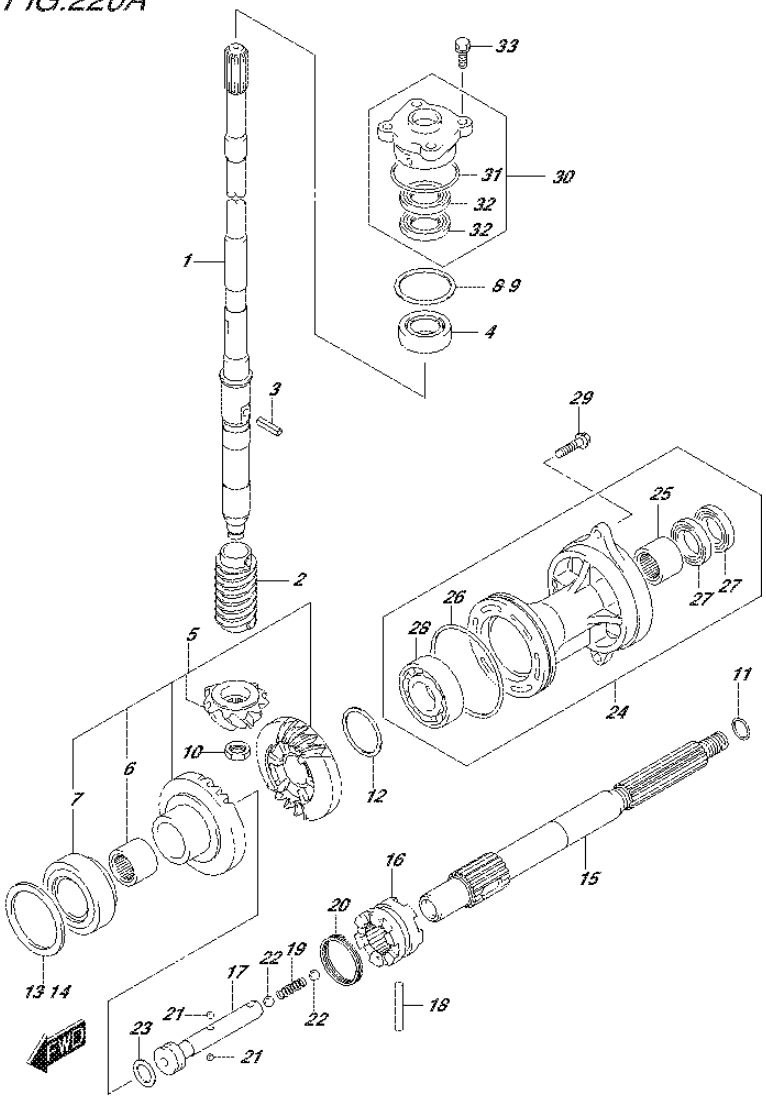

FIG.220A (1-I-6) TRANSMISSION (DF70A E01)

REF NO.	PART NO.	DESCRIPTION	Q'TY	REMARKS
12-1	09181-40018	SHIM (T:0.55)	1	REV GEAR
12-2	09181-40004	SHIM (T:0.60)	1	REV GEAR
12-3	09181-40005	SHIM (T:0.65)	1	REV GEAR
12-4	09181-40006	SHIM (T:0.70)	1	REV GEAR
12-5	09181-40007	SHIM (T:0.75)	1	REV GEAR
12-6	09181-40008	SHIM (T:0.80)	1	REV GEAR
12-7	09181-40009	SHIM (T:085)	1	REV GEAR
12-8	09181-40010	SHIM (T:0.90)	1	REV GEAR
12-9	09181-40011	SHIM (T:0.95)	1	REV GEAR
12-10	09181-40012	SHIM (T:1.00)	1	REV GEAR
12-11	09181-40013	SHIM (T:1.05)	1	REV GEAR
13	57500-87882	SHIM SET, FORWARD GEAR	1	FWD GEAR
14-1	09181-64002	.SHIM (T:0.55)	1	FWD GEAR
14-2	09181-64003	.SHIM (T:0.60)	1	FWD GEAR
14-3	09181-64004	.SHIM (T:0.65)	1	FWD GEAR
14-4	09181-64005	.SHIM (T:0.70)	1	FWD GEAR
14-5	09181-64006	.SHIM (T:0.75)	1	FWD GEAR
14-6	09181-64007	.SHIM (T:0.80)	1	FWD GEAR
14-7	09181-64008	.SHIM (T:0.85)	1	FWD GEAR
14-8	09181-64009	.SHIM (T:0.90)	1	FWD GEAR
14-9	09181-64010	.SHIM (T:0.95)	1	FWD GEAR
14-10	09181-64011	.SHIM (T:1.00)	1	FWD GEAR
15	57610-87L00	SHAFT, PROPELLER	1	
16	57621-87L10	SHIFTER, CLUTCH DOG	1	
17	57631-87L00	PIN, CONNECTOR	1	
18	09202-07003	PIN	1	
19	09440-09043	SPRING	1	
20	09440-42002	SPRING	1	
21	06111-07004	BALL	2	
22	06111-11004	BALL	2	
23	09181-25030	SHIM (25X32X3)	1	

FIG.220A

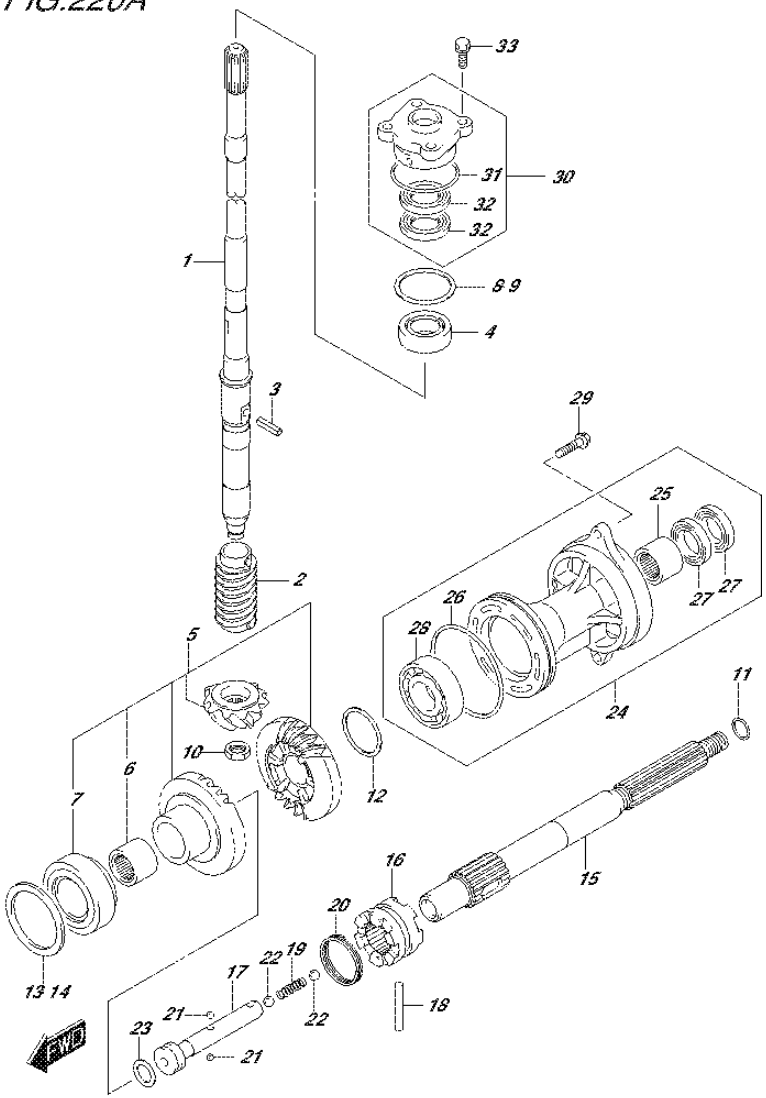

FIG.220A (1-I-7) TRANSMISSION (DF70A E01)

REF NO.	PART NO.	DESCRIPTION	Q'TY	REMARKS
24-1	56120-87L30-0EP	HOUSING, PROP SHAFT BRG (BLACK)	1	
24-2	56120-87L30-Y5S	HOUSING, PROP SHAFT BRG (WHITE)	1	
25	09263-25067	.BEARING (25X32X26)	1	
26	09280-92004	.O RING (D:3.1 ID:89.4)	1	
27	09282-25001	.OIL SEAL (25X38X8)	2	
28	08113-60087	.BEARING	1	
29	09116-08122	BOLT (8X30)	2	
30	56130-87L01	HOUSING, DRIVE SHAFT OIL SEAL	1	
31	09280-46004	.O RING (D:3.5,ID:45.7)	1	
32	09282-22007	.OIL SEAL (22X36X6)	2	
33	09117-08110	BOLT (8X25)	4	

FIG.220B

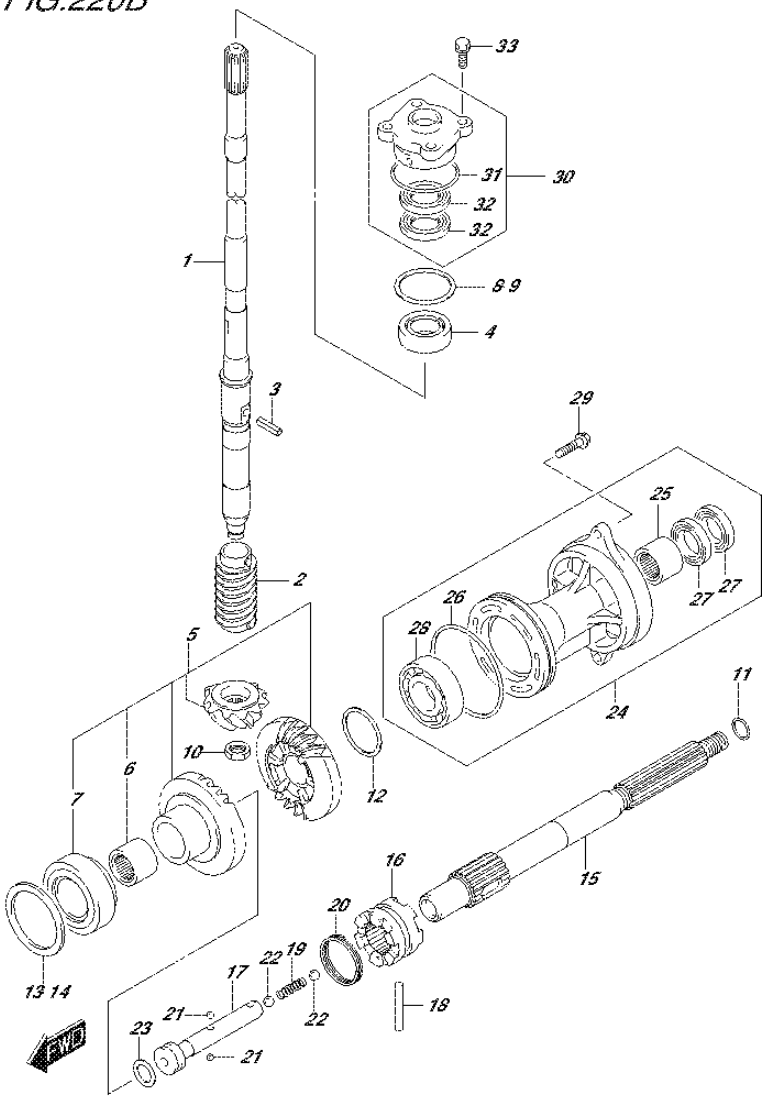

FIG.220B (1-I-8) TRANSMISSION (DF70A E40)

REF NO.	PART NO.	DESCRIPTION	Q'TY	REMARKS
1-1	57110-87L20	SHAFT ASSY, DRIVE (L)	1	W/TRANSOM(L)
1-2	57110-87L30	SHAFT ASSY, DRIVE (X)	1	W/TRANSOM(X)
2	57133-87L01	COLLAR, DRIVE SHAFT	1	
3	09205-05011	SPRING PIN (5X14)	1	
4	09265-25046	BEARING (25X52X19.25)	1	
5	57300-87880	PINION/GEAR SET	1	
6	09263-25067	.BEARING (25X32X26)	1	
7	09265-40003	.BEARING (40X75X26)	1	
8	57500-87873	SHIM SET, DRIVE SHAFT	1	
9-1	09181-40186	.SHIM (T:0.50)	1	
9-2	09181-41002	.SHIM (T:0.55)	1	
9-3	09181-41003	.SHIM (T:0.60)	1	
9-4	09181-41004	.SHIM (T:0.65)	1	
9-5	09181-41005	.SHIM (T:0.70)	1	
9-6	09181-41006	.SHIM (T:0.75)	1	
9-7	09181-40190	.SHIM (T:0.80)	1	
9-8	09181-41008	.SHIM (T:0.85)	1	
9-9	09181-41009	.SHIM (T:0.90)	1	
9-10	09181-41010	.SHIM (T:0.95)	1	
9-11	09181-40195	.SHIM (T:1.00)	1	
9-12	09181-41012	.SHIM (T:1.05)	1	
9-13	09181-41013	.SHIM (T:1.10)	1	
9-14	09181-41014	.SHIM (T:1.15)	1	
10	09140-14024	NUT	1	
11-1	09181-25130	SHIM (T:0.50)	1	PROP SHAFT REV THRUST
11-2	09181-25139	SHIM (T:1.00)	1	PROP SHAFT REV THRUST
11-3	09181-25143	SHIM (T:1.09)	1	PROP SHAFT REV THRUST
11-4	09181-25149	SHIM (T:1.21)	1	PROP SHAFT REV THRUST
11-5	09181-25153	SHIM (T:1.30)	1	PROP SHAFT REV THRUST
11-6	09181-25072	SHIM (T:1.40)	1	PROP SHAFT REV THRUST
11-7	09181-25073	SHIM (T:1.50)	1	PROP SHAFT REV THRUST
11-8	09181-25074	SHIM (T:1.60)	1	PROP SHAFT REV THRUST
11-9	09181-25075	SHIM (T:1.70)	1	PROP SHAFT REV THRUST

FIG.220B

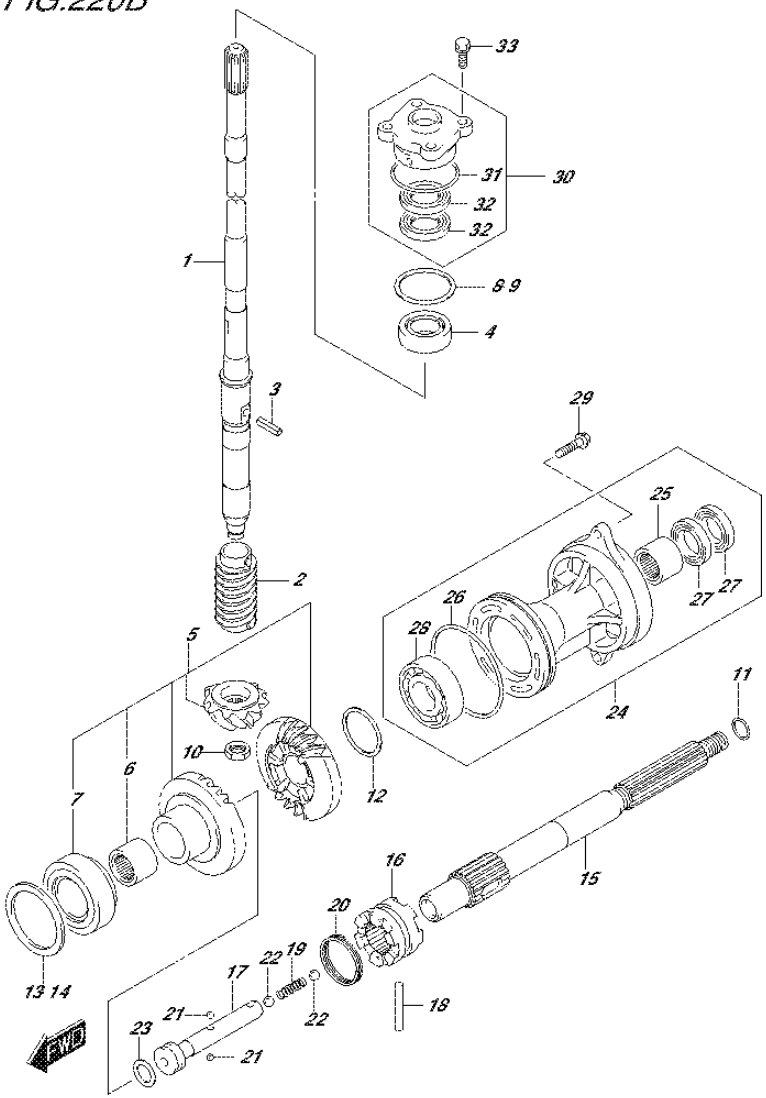

FIG.220B (1-I-9) TRANSMISSION (DF70A E40)

REF NO.	PART NO.	DESCRIPTION	Q'TY	REMARKS
12-1	09181-40018	SHIM (T:0.55)	1	REV GEAR
12-2	09181-40004	SHIM (T:0.60)	1	REV GEAR
12-3	09181-40005	SHIM (T:0.65)	1	REV GEAR
12-4	09181-40006	SHIM (T:0.70)	1	REV GEAR
12-5	09181-40007	SHIM (T:0.75)	1	REV GEAR
12-6	09181-40008	SHIM (T:0.80)	1	REV GEAR
12-7	09181-40009	SHIM (T:085)	1	REV GEAR
12-8	09181-40010	SHIM (T:0.90)	1	REV GEAR
12-9	09181-40011	SHIM (T:0.95)	1	REV GEAR
12-10	09181-40012	SHIM (T:1.00)	1	REV GEAR
12-11	09181-40013	SHIM (T:1.05)	1	REV GEAR
13	57500-87882	SHIM SET, FORWARD GEAR	1	FWD GEAR
14-1	09181-64002	.SHIM (T:0.55)	1	FWD GEAR
14-2	09181-64003	.SHIM (T:0.60)	1	FWD GEAR
14-3	09181-64004	.SHIM (T:0.65)	1	FWD GEAR
14-4	09181-64005	.SHIM (T:0.70)	1	FWD GEAR
14-5	09181-64006	.SHIM (T:0.75)	1	FWD GEAR
14-6	09181-64007	.SHIM (T:0.80)	1	FWD GEAR
14-7	09181-64008	.SHIM (T:0.85)	1	FWD GEAR
14-8	09181-64009	.SHIM (T:0.90)	1	FWD GEAR
14-9	09181-64010	.SHIM (T:0.95)	1	FWD GEAR
14-10	09181-64011	.SHIM (T:1.00)	1	FWD GEAR
15	57610-87L00	SHAFT, PROPELLER	1	
16	57621-87L10	SHIFTER, CLUTCH DOG	1	
17	57631-87L00	PIN, CONNECTOR	1	
18	09202-07003	PIN	1	
19	09440-09043	SPRING	1	
20	09440-42002	SPRING	1	
21	06111-07004	BALL	2	
22	06111-11004	BALL	2	
23	09181-25030	SHIM (25X32X3)	1	

FIG.220B

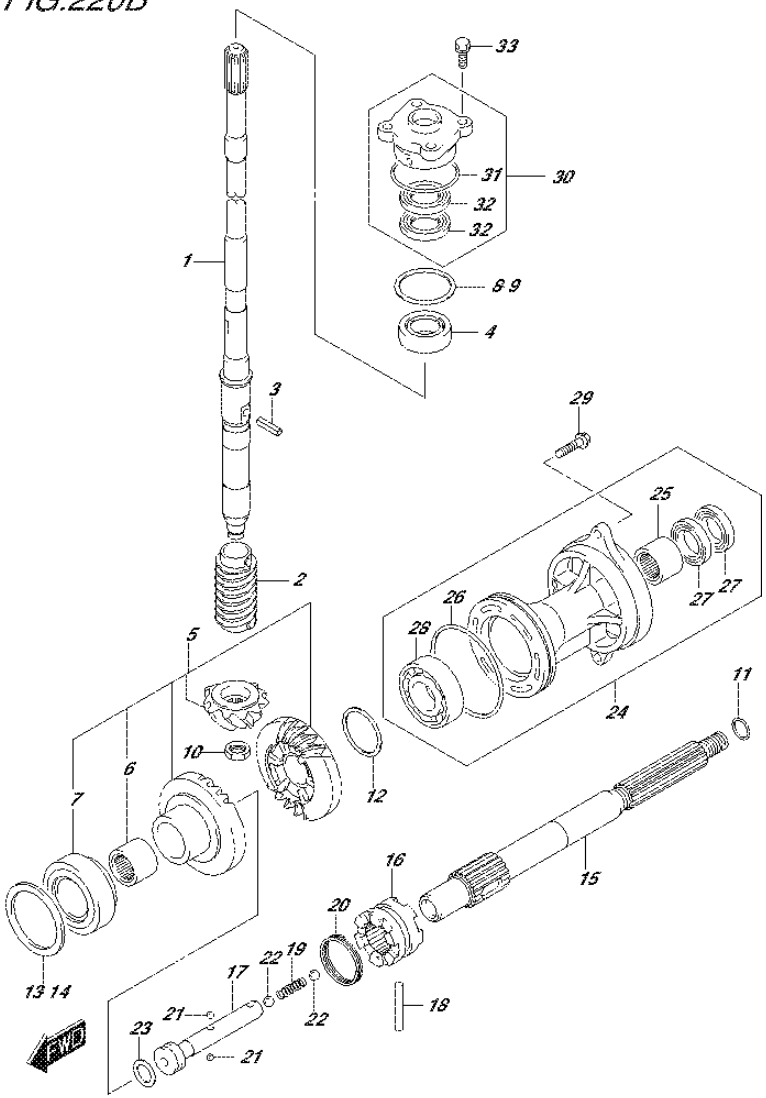

FIG.220B (1-I-10) TRANSMISSION (DF70A E40)

REF NO.	PART NO.	DESCRIPTION	Q'TY	REMARKS
24-1	56120-87L30-0EP	HOUSING, PROP SHAFT BRG (BLACK)	1	
24-2	56120-87L30-Y5S	HOUSING, PROP SHAFT BRG (WHITE)	1	
25	09263-25067	.BEARING (25X32X26)	1	
26	09280-92004	.O RING (D:3.1 ID:89.4)	1	
27	09282-25001	.OIL SEAL (25X38X8)	2	
28	08113-60087	.BEARING	1	
29	09116-08122	BOLT (8X30)	2	
30	56130-87L01	HOUSING, DRIVE SHAFT OIL SEAL	1	
31	09280-46004	.O RING (D:3.5,ID:45.7)	1	
32	09282-22007	.OIL SEAL (22X36X6)	2	
33	09117-08110	BOLT (8X25)	4	

FIG.220C

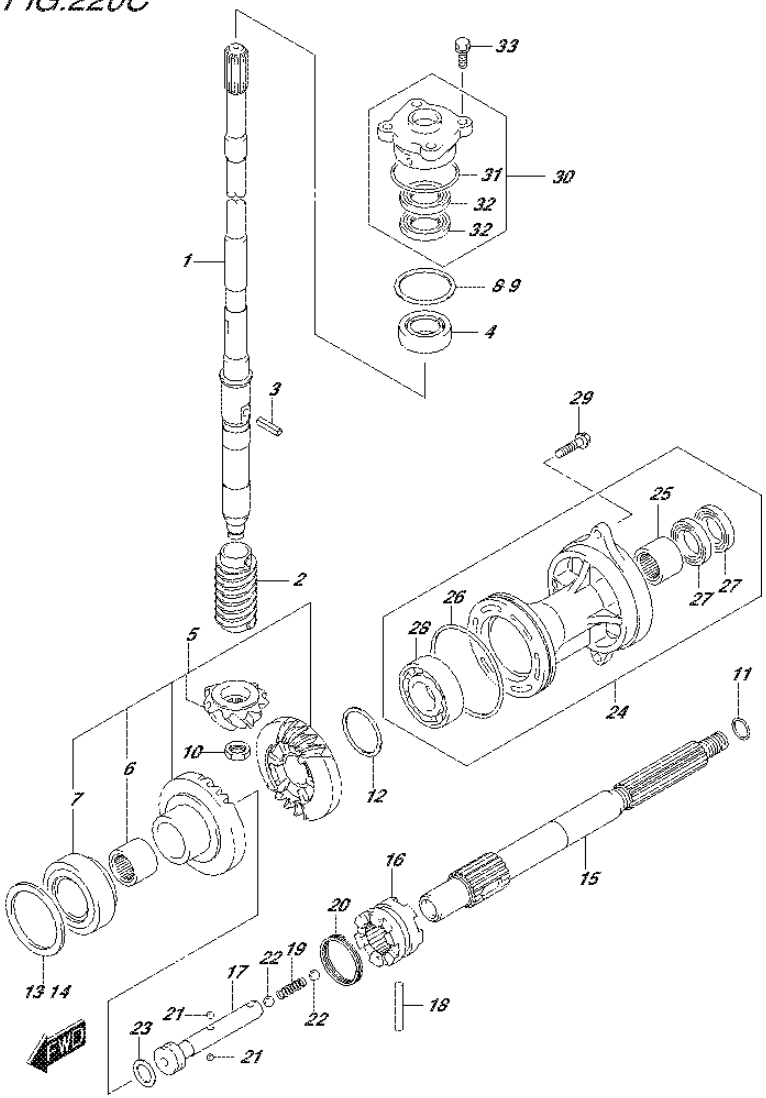

FIG.220C (1-I-11) TRANSMISSION (DF70ATH E01)

REF NO.	PART NO.	DESCRIPTION	Q'TY	REMARKS
1-1	57110-87L20	SHAFT ASSY, DRIVE (L)	1	W/TRANSOM(L)
1-2	57110-87L30	SHAFT ASSY, DRIVE (X)	1	W/TRANSOM(X)
2	57133-87L01	COLLAR, DRIVE SHAFT	1	
3	09205-05011	SPRING PIN (5X14)	1	
4	09265-25046	BEARING (25X52X19.25)	1	
5	57300-87880	PINION/GEAR SET	1	
6	09263-25067	.BEARING (25X32X26)	1	
7	09265-40003	.BEARING (40X75X26)	1	
8	57500-87873	SHIM SET, DRIVE SHAFT	1	
9-1	09181-40186	.SHIM (T:0.50)	1	
9-2	09181-41002	.SHIM (T:0.55)	1	
9-3	09181-41003	.SHIM (T:0.60)	1	
9-4	09181-41004	.SHIM (T:0.65)	1	
9-5	09181-41005	.SHIM (T:0.70)	1	
9-6	09181-41006	.SHIM (T:0.75)	1	
9-7	09181-40190	.SHIM (T:0.80)	1	
9-8	09181-41008	.SHIM (T:0.85)	1	
9-9	09181-41009	.SHIM (T:0.90)	1	
9-10	09181-41010	.SHIM (T:0.95)	1	
9-11	09181-40195	.SHIM (T:1.00)	1	
9-12	09181-41012	.SHIM (T:1.05)	1	
9-13	09181-41013	.SHIM (T:1.10)	1	
9-14	09181-41014	.SHIM (T:1.15)	1	
10	09140-14024	NUT	1	
11-1	09181-25130	SHIM (T:0.50)	1	PROP SHAFT REV THRUST
11-2	09181-25139	SHIM (T:1.00)	1	PROP SHAFT REV THRUST
11-3	09181-25143	SHIM (T:1.09)	1	PROP SHAFT REV THRUST
11-4	09181-25149	SHIM (T:1.21)	1	PROP SHAFT REV THRUST
11-5	09181-25153	SHIM (T:1.30)	1	PROP SHAFT REV THRUST
11-6	09181-25072	SHIM (T:1.40)	1	PROP SHAFT REV THRUST
11-7	09181-25073	SHIM (T:1.50)	1	PROP SHAFT REV THRUST
11-8	09181-25074	SHIM (T:1.60)	1	PROP SHAFT REV THRUST
11-9	09181-25075	SHIM (T:1.70)	1	PROP SHAFT REV THRUST

FIG.220C

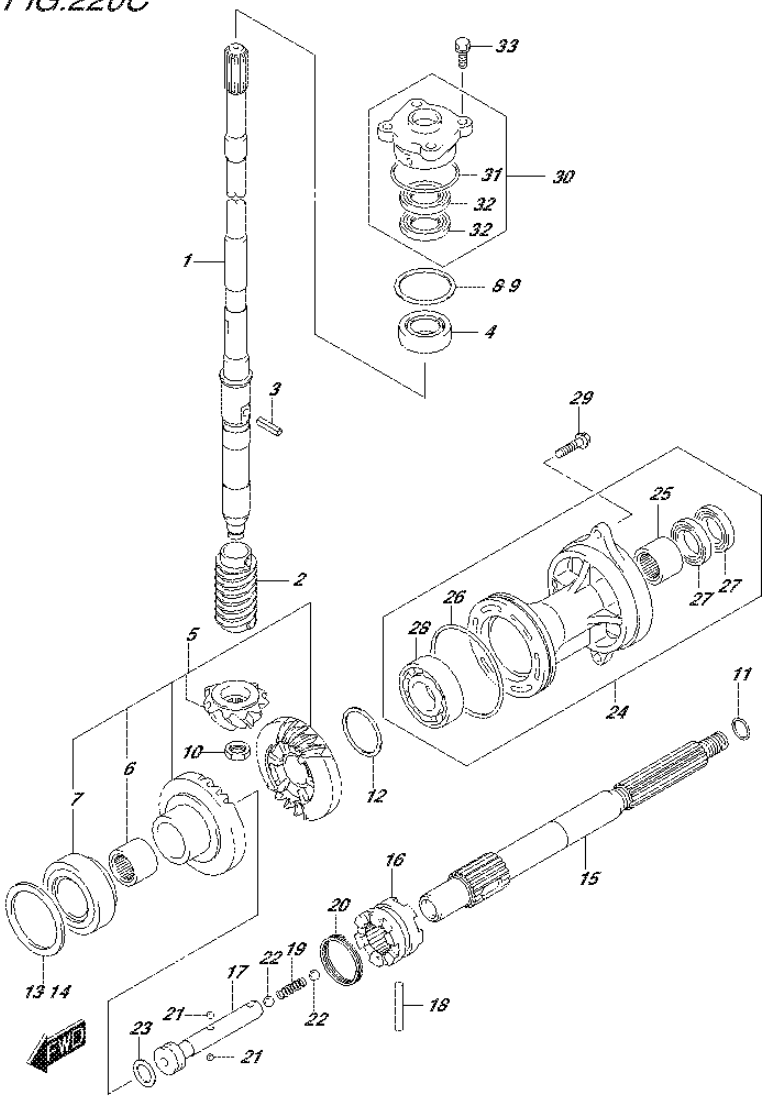

FIG.220C (1-I-12) TRANSMISSION (DF70ATH E01)

REF NO.	PART NO.	DESCRIPTION	Q'TY	REMARKS
12-1	09181-40018	SHIM (T:0.55)	1	REV GEAR
12-2	09181-40004	SHIM (T:0.60)	1	REV GEAR
12-3	09181-40005	SHIM (T:0.65)	1	REV GEAR
12-4	09181-40006	SHIM (T:0.70)	1	REV GEAR
12-5	09181-40007	SHIM (T:0.75)	1	REV GEAR
12-6	09181-40008	SHIM (T:0.80)	1	REV GEAR
12-7	09181-40009	SHIM (T:085)	1	REV GEAR
12-8	09181-40010	SHIM (T:0.90)	1	REV GEAR
12-9	09181-40011	SHIM (T:0.95)	1	REV GEAR
12-10	09181-40012	SHIM (T:1.00)	1	REV GEAR
12-11	09181-40013	SHIM (T:1.05)	1	REV GEAR
13	57500-87882	SHIM SET, FORWARD GEAR	1	FWD GEAR
14-1	09181-64002	.SHIM (T:0.55)	1	FWD GEAR
14-2	09181-64003	.SHIM (T:0.60)	1	FWD GEAR
14-3	09181-64004	.SHIM (T:0.65)	1	FWD GEAR
14-4	09181-64005	.SHIM (T:0.70)	1	FWD GEAR
14-5	09181-64006	.SHIM (T:0.75)	1	FWD GEAR
14-6	09181-64007	.SHIM (T:0.80)	1	FWD GEAR
14-7	09181-64008	.SHIM (T:0.85)	1	FWD GEAR
14-8	09181-64009	.SHIM (T:0.90)	1	FWD GEAR
14-9	09181-64010	.SHIM (T:0.95)	1	FWD GEAR
14-10	09181-64011	.SHIM (T:1.00)	1	FWD GEAR
15	57610-87L00	SHAFT, PROPELLER	1	
16	57621-87L10	SHIFTER, CLUTCH DOG	1	
17	57631-87L00	PIN, CONNECTOR	1	
18	09202-07003	PIN	1	
19	09440-09043	SPRING	1	
20	09440-42002	SPRING	1	
21	06111-07004	BALL	2	
22	06111-11004	BALL	2	
23	09181-25030	SHIM (25X32X3)	1	

FIG.220C

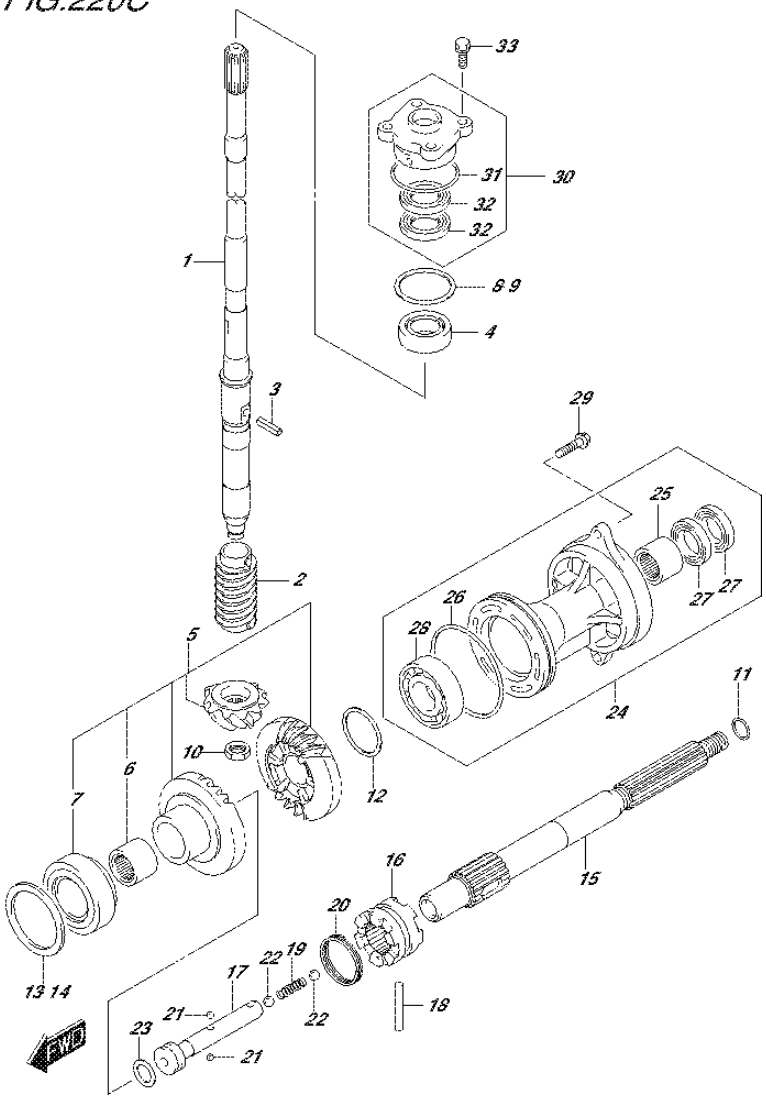

FIG.220C (1-I-13) TRANSMISSION (DF70ATH E01)

REF NO.	PART NO.	DESCRIPTION	Q'TY	REMARKS
24	56120-87L30-0EP	HOUSING, PROP SHAFT BRG (BLACK)	1	
25	09263-25067	.BEARING (25X32X26)	1	
26	09280-92004	.O RING (D:3.1 ID:89.4)	1	
27	09282-25001	.OIL SEAL (25X38X8)	2	
28	08113-60087	.BEARING	1	
29	09116-08122	BOLT (8X30)	2	
30	56130-87L01	HOUSING, DRIVE SHAFT OIL SEAL	1	
31	09280-46004	.O RING (D:3.5,ID:45.7)	1	
32	09282-22007	.OIL SEAL (22X36X6)	2	
33	09117-08110	BOLT (8X25)	4	

FIG.220D

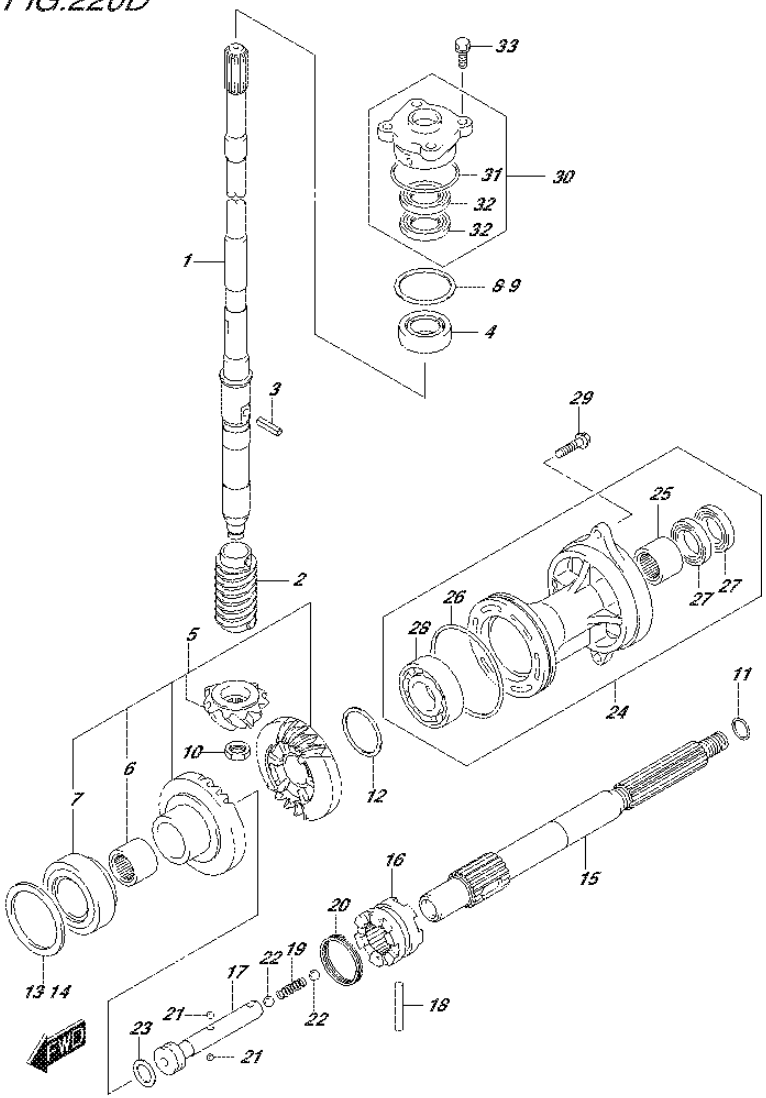

FIG.220D (1-I-14) TRANSMISSION (DF70ATH E40)

REF NO.	PART NO.	DESCRIPTION	Q'TY	REMARKS
1-1	57110-87L20	SHAFT ASSY, DRIVE (L)	1	W/TRANSOM(L)
1-2	57110-87L30	SHAFT ASSY, DRIVE (X)	1	W/TRANSOM(X)
2	57133-87L01	COLLAR, DRIVE SHAFT	1	
3	09205-05011	SPRING PIN (5X14)	1	
4	09265-25046	BEARING (25X52X19.25)	1	
5	57300-87880	PINION/GEAR SET	1	
6	09263-25067	.BEARING (25X32X26)	1	
7	09265-40003	.BEARING (40X75X26)	1	
8	57500-87873	SHIM SET, DRIVE SHAFT	1	
9-1	09181-40186	.SHIM (T:0.50)	1	
9-2	09181-41002	.SHIM (T:0.55)	1	
9-3	09181-41003	.SHIM (T:0.60)	1	
9-4	09181-41004	.SHIM (T:0.65)	1	
9-5	09181-41005	.SHIM (T:0.70)	1	
9-6	09181-41006	.SHIM (T:0.75)	1	
9-7	09181-40190	.SHIM (T:0.80)	1	
9-8	09181-41008	.SHIM (T:0.85)	1	
9-9	09181-41009	.SHIM (T:0.90)	1	
9-10	09181-41010	.SHIM (T:0.95)	1	
9-11	09181-40195	.SHIM (T:1.00)	1	
9-12	09181-41012	.SHIM (T:1.05)	1	
9-13	09181-41013	.SHIM (T:1.10)	1	
9-14	09181-41014	.SHIM (T:1.15)	1	
10	09140-14024	NUT	1	
11-1	09181-25130	SHIM (T:0.50)	1	PROP SHAFT REV THRUST
11-2	09181-25139	SHIM (T:1.00)	1	PROP SHAFT REV THRUST
11-3	09181-25143	SHIM (T:1.09)	1	PROP SHAFT REV THRUST
11-4	09181-25149	SHIM (T:1.21)	1	PROP SHAFT REV THRUST
11-5	09181-25153	SHIM (T:1.30)	1	PROP SHAFT REV THRUST
11-6	09181-25072	SHIM (T:1.40)	1	PROP SHAFT REV THRUST
11-7	09181-25073	SHIM (T:1.50)	1	PROP SHAFT REV THRUST
11-8	09181-25074	SHIM (T:1.60)	1	PROP SHAFT REV THRUST
11-9	09181-25075	SHIM (T:1.70)	1	PROP SHAFT REV THRUST

FIG.220D

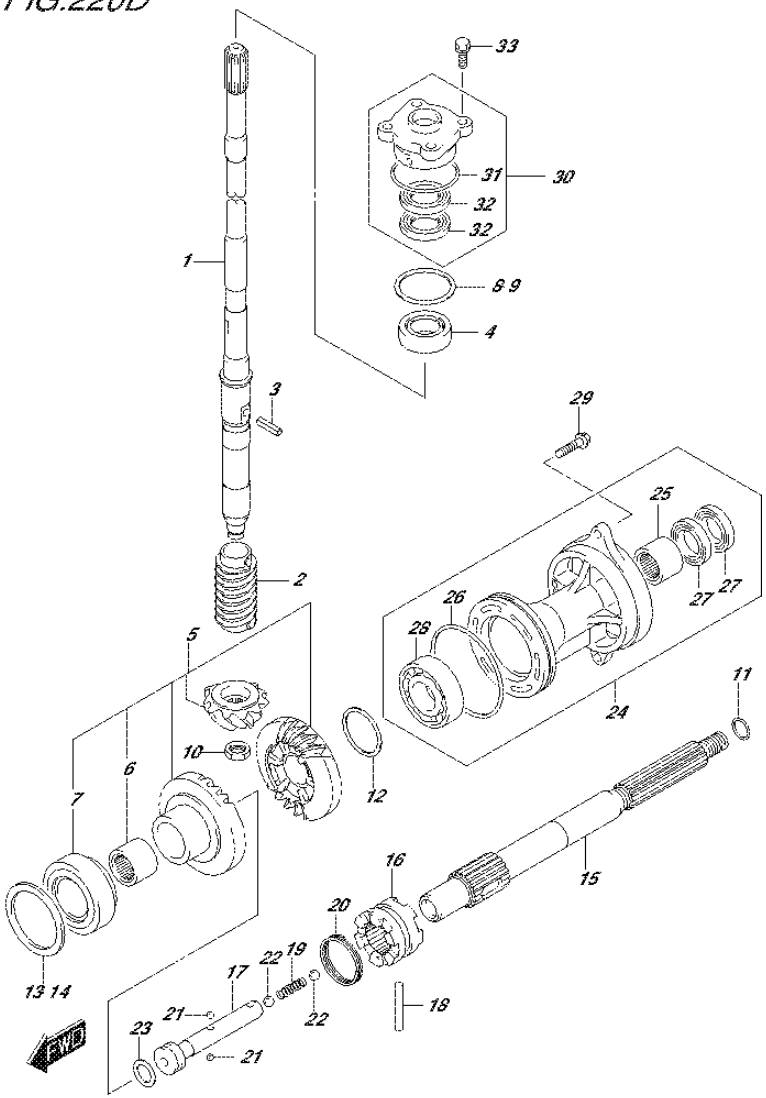

FIG.220D (1-I-15) TRANSMISSION (DF70ATH E40)

REF NO.	PART NO.	DESCRIPTION	Q'TY	REMARKS
12-1	09181-40018	SHIM (T:0.55)	1	REV GEAR
12-2	09181-40004	SHIM (T:0.60)	1	REV GEAR
12-3	09181-40005	SHIM (T:0.65)	1	REV GEAR
12-4	09181-40006	SHIM (T:0.70)	1	REV GEAR
12-5	09181-40007	SHIM (T:0.75)	1	REV GEAR
12-6	09181-40008	SHIM (T:0.80)	1	REV GEAR
12-7	09181-40009	SHIM (T:085)	1	REV GEAR
12-8	09181-40010	SHIM (T:0.90)	1	REV GEAR
12-9	09181-40011	SHIM (T:0.95)	1	REV GEAR
12-10	09181-40012	SHIM (T:1.00)	1	REV GEAR
12-11	09181-40013	SHIM (T:1.05)	1	REV GEAR
13	57500-87882	SHIM SET, FORWARD GEAR	1	FWD GEAR
14-1	09181-64002	.SHIM (T:0.55)	1	FWD GEAR
14-2	09181-64003	.SHIM (T:0.60)	1	FWD GEAR
14-3	09181-64004	.SHIM (T:0.65)	1	FWD GEAR
14-4	09181-64005	.SHIM (T:0.70)	1	FWD GEAR
14-5	09181-64006	.SHIM (T:0.75)	1	FWD GEAR
14-6	09181-64007	.SHIM (T:0.80)	1	FWD GEAR
14-7	09181-64008	.SHIM (T:0.85)	1	FWD GEAR
14-8	09181-64009	.SHIM (T:0.90)	1	FWD GEAR
14-9	09181-64010	.SHIM (T:0.95)	1	FWD GEAR
14-10	09181-64011	.SHIM (T:1.00)	1	FWD GEAR
15	57610-87L00	SHAFT, PROPELLER	1	
16	57621-87L10	SHIFTER, CLUTCH DOG	1	
17	57631-87L00	PIN, CONNECTOR	1	
18	09202-07003	PIN	1	
19	09440-09043	SPRING	1	
20	09440-42002	SPRING	1	
21	06111-07004	BALL	2	
22	06111-11004	BALL	2	
23	09181-25030	SHIM (25X32X3)	1	

FIG.220D

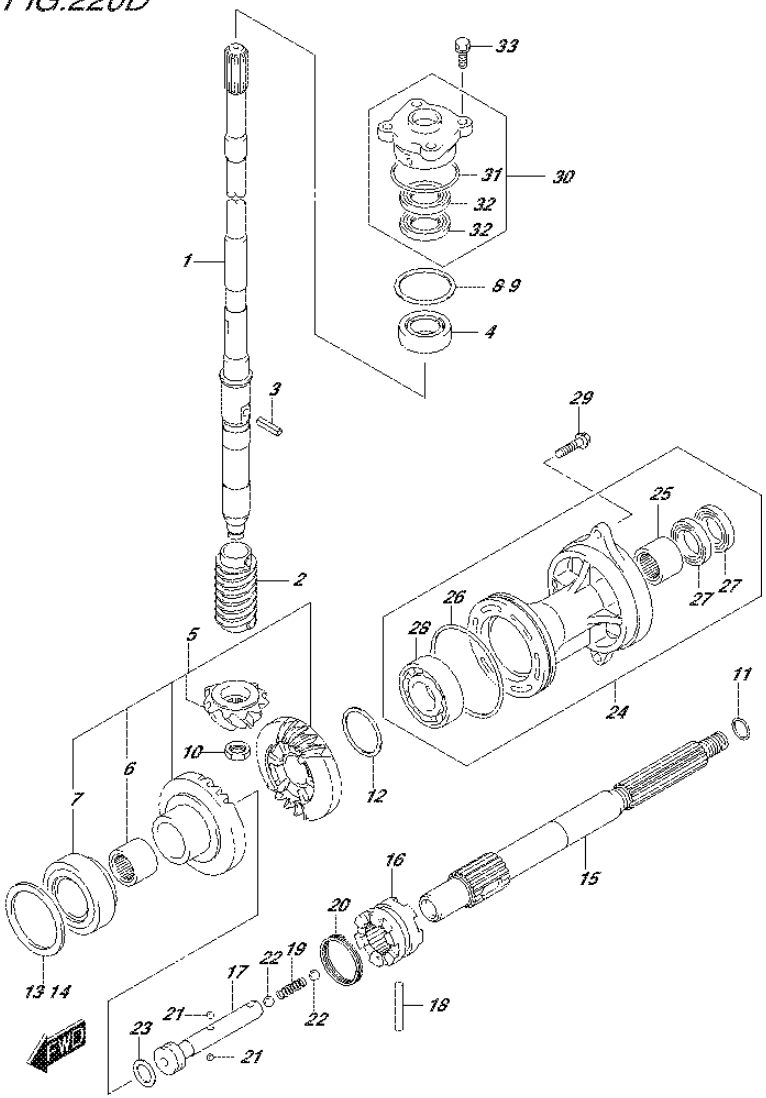

FIG.220D (1-J-2) TRANSMISSION (DF70ATH E40)

REF NO.	PART NO.	DESCRIPTION	Q'TY	REMARKS
24	56120-87L30-0EP	HOUSING, PROP SHAFT BRG (BLACK)	1	
25	09263-25067	.BEARING (25X32X26)	1	
26	09280-92004	.O RING (D:3.1 ID:89.4)	1	
27	09282-25001	.OIL SEAL (25X38X8)	2	
28	08113-60087	.BEARING	1	
29	09116-08122	BOLT (8X30)	2	
30	56130-87L01	HOUSING, DRIVE SHAFT OIL SEAL	1	
31	09280-46004	.O RING (D:3.5,ID:45.7)	1	
32	09282-22007	.OIL SEAL (22X36X6)	2	
33	09117-08110	BOLT (8X25)	4	

FIG.220E

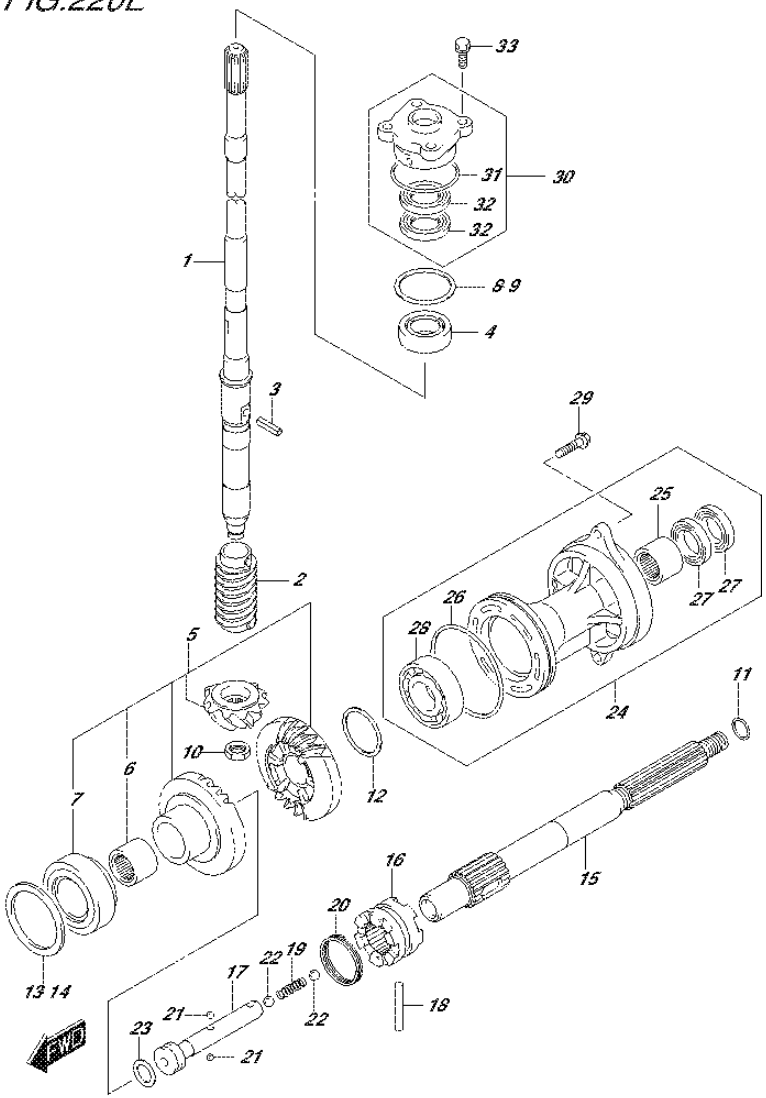

FIG.220E (1-J-3) TRANSMISSION (DF80A E01)

REF NO.	PART NO.	DESCRIPTION	Q'TY	REMARKS
1-1	57110-87L20	SHAFT ASSY, DRIVE (L)	1	W/TRANSOM(L)
1-2	57110-87L30	SHAFT ASSY, DRIVE (X)	1	W/TRANSOM(X)
2	57133-87L01	COLLAR, DRIVE SHAFT	1	
3	09205-05011	SPRING PIN (5X14)	1	
4	09265-25046	BEARING (25X52X19.25)	1	
5	57300-87880	PINION/GEAR SET	1	
6	09263-25067	.BEARING (25X32X26)	1	
7	09265-40003	.BEARING (40X75X26)	1	
8	57500-87873	SHIM SET, DRIVE SHAFT	1	
9-1	09181-40186	.SHIM (T:0.50)	1	
9-2	09181-41002	.SHIM (T:0.55)	1	
9-3	09181-41003	.SHIM (T:0.60)	1	
9-4	09181-41004	.SHIM (T:0.65)	1	
9-5	09181-41005	.SHIM (T:0.70)	1	
9-6	09181-41006	.SHIM (T:0.75)	1	
9-7	09181-40190	.SHIM (T:0.80)	1	
9-8	09181-41008	.SHIM (T:0.85)	1	
9-9	09181-41009	.SHIM (T:0.90)	1	
9-10	09181-41010	.SHIM (T:0.95)	1	
9-11	09181-40195	.SHIM (T:1.00)	1	
9-12	09181-41012	.SHIM (T:1.05)	1	
9-13	09181-41013	.SHIM (T:1.10)	1	
9-14	09181-41014	.SHIM (T:1.15)	1	
10	09140-14024	NUT	1	
11-1	09181-25130	SHIM (T:0.50)	1	PROP SHAFT REV THRUST
11-2	09181-25139	SHIM (T:1.00)	1	PROP SHAFT REV THRUST
11-3	09181-25143	SHIM (T:1.09)	1	PROP SHAFT REV THRUST
11-4	09181-25149	SHIM (T:1.21)	1	PROP SHAFT REV THRUST
11-5	09181-25153	SHIM (T:1.30)	1	PROP SHAFT REV THRUST
11-6	09181-25072	SHIM (T:1.40)	1	PROP SHAFT REV THRUST
11-7	09181-25073	SHIM (T:1.50)	1	PROP SHAFT REV THRUST
11-8	09181-25074	SHIM (T:1.60)	1	PROP SHAFT REV THRUST
11-9	09181-25075	SHIM (T:1.70)	1	PROP SHAFT REV THRUST

FIG.220E

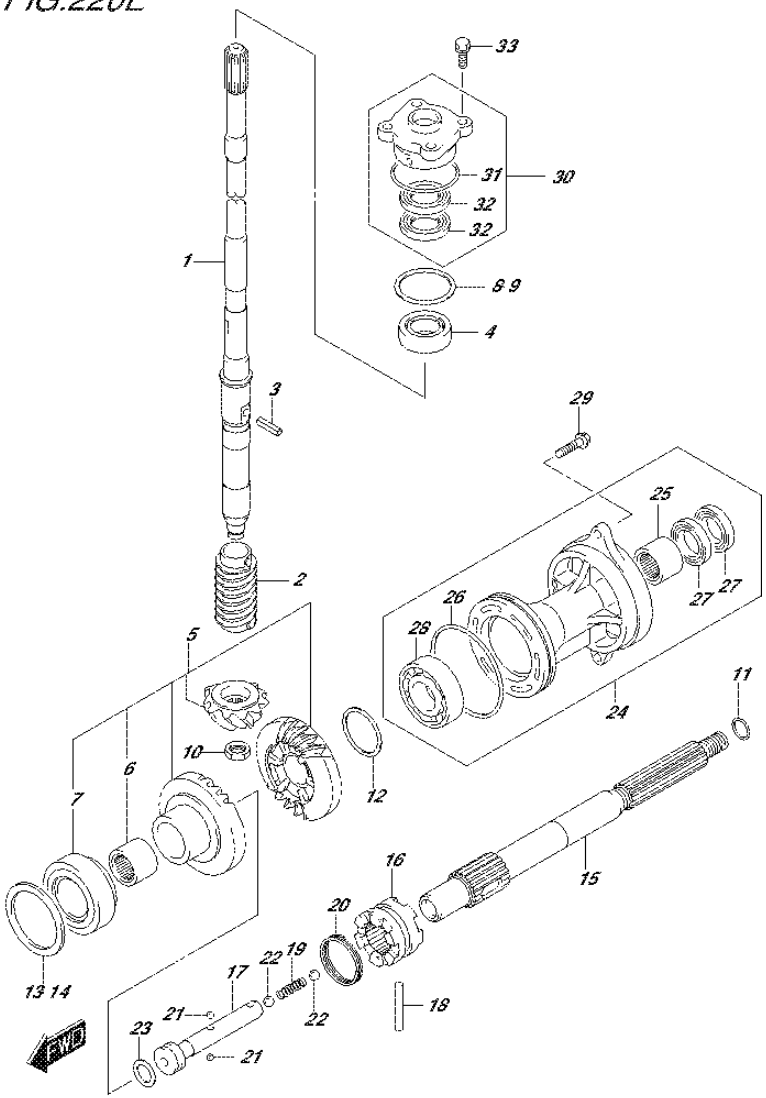

FIG.220E (1-J-4) TRANSMISSION (DF80A E01)

REF NO.	PART NO.	DESCRIPTION	Q'TY	REMARKS
12-1	09181-40018	SHIM (T:0.55)	1	REV GEAR
12-2	09181-40004	SHIM (T:0.60)	1	REV GEAR
12-3	09181-40005	SHIM (T:0.65)	1	REV GEAR
12-4	09181-40006	SHIM (T:0.70)	1	REV GEAR
12-5	09181-40007	SHIM (T:0.75)	1	REV GEAR
12-6	09181-40008	SHIM (T:0.80)	1	REV GEAR
12-7	09181-40009	SHIM (T:085)	1	REV GEAR
12-8	09181-40010	SHIM (T:0.90)	1	REV GEAR
12-9	09181-40011	SHIM (T:0.95)	1	REV GEAR
12-10	09181-40012	SHIM (T:1.00)	1	REV GEAR
12-11	09181-40013	SHIM (T:1.05)	1	REV GEAR
13	57500-87882	SHIM SET, FORWARD GEAR	1	FWD GEAR
14-1	09181-64002	.SHIM (T:0.55)	1	FWD GEAR
14-2	09181-64003	.SHIM (T:0.60)	1	FWD GEAR
14-3	09181-64004	.SHIM (T:0.65)	1	FWD GEAR
14-4	09181-64005	.SHIM (T:0.70)	1	FWD GEAR
14-5	09181-64006	.SHIM (T:0.75)	1	FWD GEAR
14-6	09181-64007	.SHIM (T:0.80)	1	FWD GEAR
14-7	09181-64008	.SHIM (T:0.85)	1	FWD GEAR
14-8	09181-64009	.SHIM (T:0.90)	1	FWD GEAR
14-9	09181-64010	.SHIM (T:0.95)	1	FWD GEAR
14-10	09181-64011	.SHIM (T:1.00)	1	FWD GEAR
15	57610-87L00	SHAFT, PROPELLER	1	
16	57621-87L10	SHIFTER, CLUTCH DOG	1	
17	57631-87L00	PIN, CONNECTOR	1	
18	09202-07003	PIN	1	
19	09440-09043	SPRING	1	
20	09440-42002	SPRING	1	
21	06111-07004	BALL	2	
22	06111-11004	BALL	2	
23	09181-25030	SHIM (25X32X3)	1	

FIG.220E

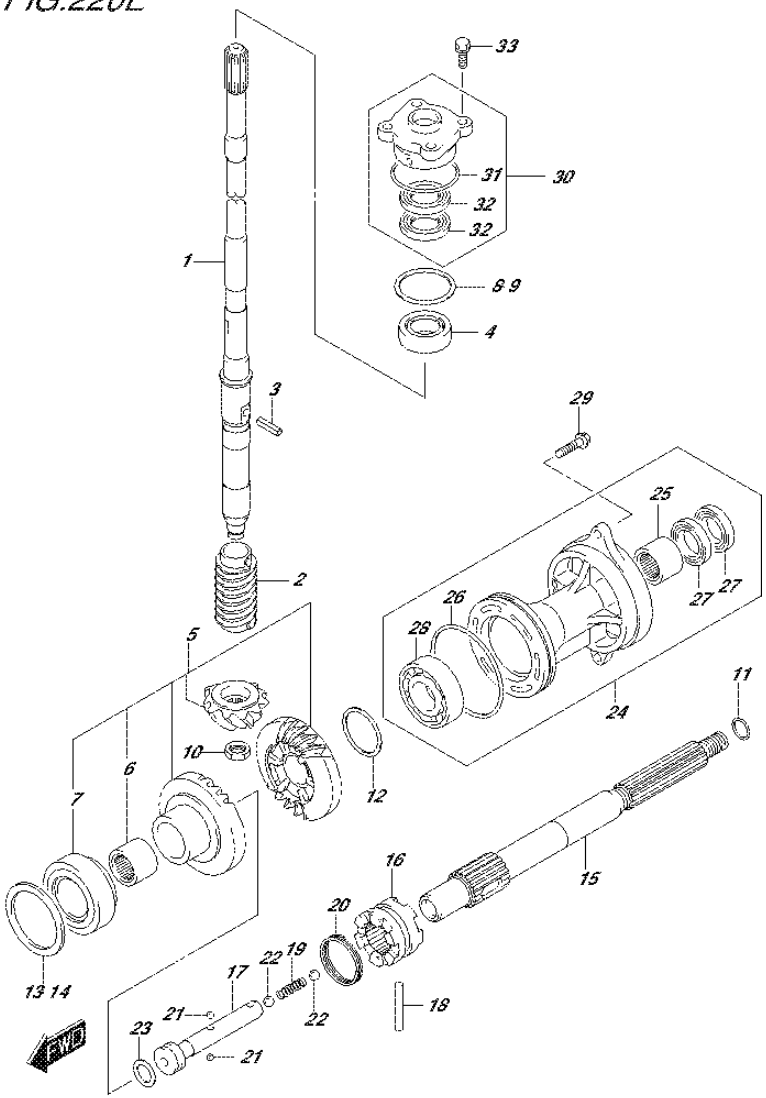

FIG.220E (1-J-5) TRANSMISSION (DF80A E01)

REF NO.	PART NO.	DESCRIPTION	Q'TY	REMARKS
24	56120-87L30-0EP	HOUSING, PROP SHAFT BRG (BLACK)	1	
25	09263-25067	.BEARING (25X32X26)	1	
26	09280-92004	.O RING (D:3.1 ID:89.4)	1	
27	09282-25001	.OIL SEAL (25X38X8)	2	
28	08113-60087	.BEARING	1	
29	09116-08122	BOLT (8X30)	2	
30	56130-87L01	HOUSING, DRIVE SHAFT OIL SEAL	1	
31	09280-46004	.O RING (D:3.5,ID:45.7)	1	
32	09282-22007	.OIL SEAL (22X36X6)	2	
33	09117-08110	BOLT (8X25)	4	

FIG.220F

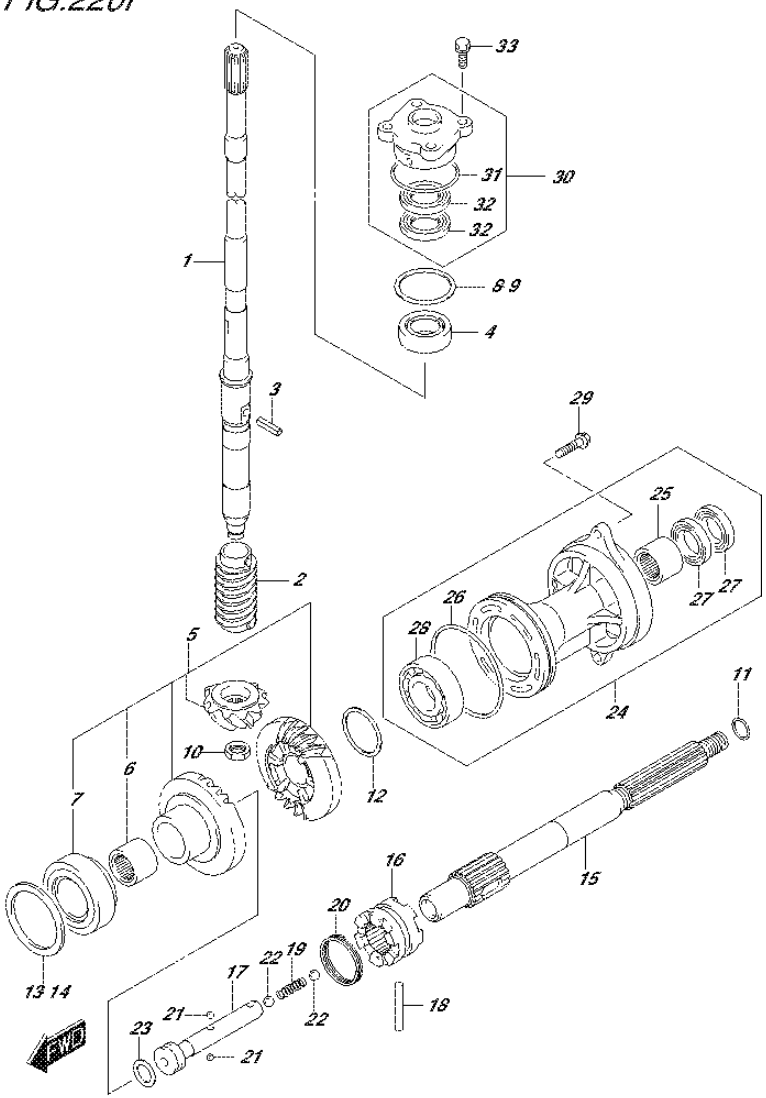

DF90A_E01_015_220F
TRANSMISSION

FIG.220F (1-J-6) TRANSMISSION (DF80A E40)

REF NO.	PART NO.	DESCRIPTION	Q'TY	REMARKS
1-1	57110-87L20	SHAFT ASSY, DRIVE (L)	1	W/TRANSOM(L)
1-2	57110-87L30	SHAFT ASSY, DRIVE (X)	1	W/TRANSOM(X)
2	57133-87L01	COLLAR, DRIVE SHAFT	1	
3	09205-05011	SPRING PIN (5X14)	1	
4	09265-25046	BEARING (25X52X19.25)	1	
5	57300-87880	PINION/GEAR SET	1	
6	09263-25067	.BEARING (25X32X26)	1	
7	09265-40003	.BEARING (40X75X26)	1	
8	57500-87873	SHIM SET, DRIVE SHAFT	1	
9-1	09181-40186	.SHIM (T:0.50)	1	
9-2	09181-41002	.SHIM (T:0.55)	1	
9-3	09181-41003	.SHIM (T:0.60)	1	
9-4	09181-41004	.SHIM (T:0.65)	1	
9-5	09181-41005	.SHIM (T:0.70)	1	
9-6	09181-41006	.SHIM (T:0.75)	1	
9-7	09181-40190	.SHIM (T:0.80)	1	
9-8	09181-41008	.SHIM (T:0.85)	1	
9-9	09181-41009	.SHIM (T:0.90)	1	
9-10	09181-41010	.SHIM (T:0.95)	1	
9-11	09181-40195	.SHIM (T:1.00)	1	
9-12	09181-41012	.SHIM (T:1.05)	1	
9-13	09181-41013	.SHIM (T:1.10)	1	
9-14	09181-41014	.SHIM (T:1.15)	1	
10	09140-14024	NUT	1	
11-1	09181-25130	SHIM (T:0.50)	1	PROP SHAFT REV THRUST
11-2	09181-25139	SHIM (T:1.00)	1	PROP SHAFT REV THRUST
11-3	09181-25143	SHIM (T:1.09)	1	PROP SHAFT REV THRUST
11-4	09181-25149	SHIM (T:1.21)	1	PROP SHAFT REV THRUST
11-5	09181-25153	SHIM (T:1.30)	1	PROP SHAFT REV THRUST
11-6	09181-25072	SHIM (T:1.40)	1	PROP SHAFT REV THRUST
11-7	09181-25073	SHIM (T:1.50)	1	PROP SHAFT REV THRUST
11-8	09181-25074	SHIM (T:1.60)	1	PROP SHAFT REV THRUST
11-9	09181-25075	SHIM (T:1.70)	1	PROP SHAFT REV THRUST

FIG.220F

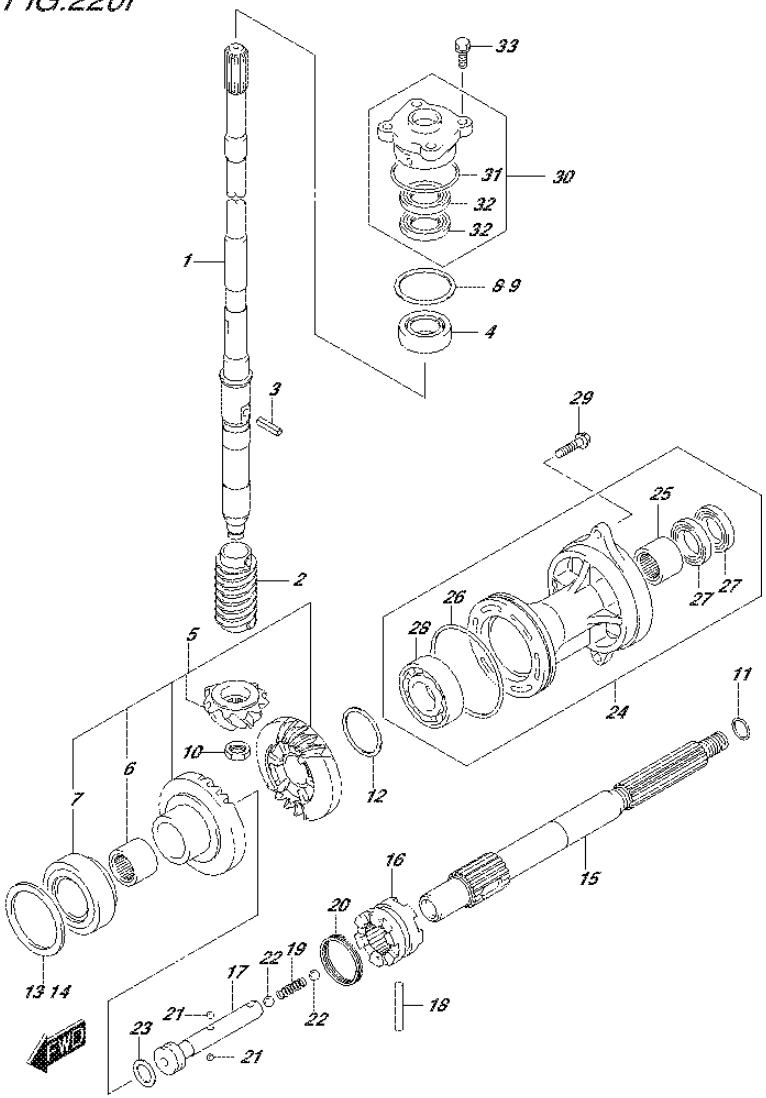

FIG.220F (1-J-7) TRANSMISSION (DF80A E40)

REF NO.	PART NO.	DESCRIPTION	Q'TY	REMARKS
12-1	09181-40018	SHIM (T:0.55)	1	REV GEAR
12-2	09181-40004	SHIM (T:0.60)	1	REV GEAR
12-3	09181-40005	SHIM (T:0.65)	1	REV GEAR
12-4	09181-40006	SHIM (T:0.70)	1	REV GEAR
12-5	09181-40007	SHIM (T:0.75)	1	REV GEAR
12-6	09181-40008	SHIM (T:0.80)	1	REV GEAR
12-7	09181-40009	SHIM (T:085)	1	REV GEAR
12-8	09181-40010	SHIM (T:0.90)	1	REV GEAR
12-9	09181-40011	SHIM (T:0.95)	1	REV GEAR
12-10	09181-40012	SHIM (T:1.00)	1	REV GEAR
12-11	09181-40013	SHIM (T:1.05)	1	REV GEAR
13	57500-87882	SHIM SET, FORWARD GEAR	1	FWD GEAR
14-1	09181-64002	.SHIM (T:0.55)	1	FWD GEAR
14-2	09181-64003	.SHIM (T:0.60)	1	FWD GEAR
14-3	09181-64004	.SHIM (T:0.65)	1	FWD GEAR
14-4	09181-64005	.SHIM (T:0.70)	1	FWD GEAR
14-5	09181-64006	.SHIM (T:0.75)	1	FWD GEAR
14-6	09181-64007	.SHIM (T:0.80)	1	FWD GEAR
14-7	09181-64008	.SHIM (T:0.85)	1	FWD GEAR
14-8	09181-64009	.SHIM (T:0.90)	1	FWD GEAR
14-9	09181-64010	.SHIM (T:0.95)	1	FWD GEAR
14-10	09181-64011	.SHIM (T:1.00)	1	FWD GEAR
15	57610-87L00	SHAFT, PROPELLER	1	
16	57621-87L10	SHIFTER, CLUTCH DOG	1	
17	57631-87L00	PIN, CONNECTOR	1	
18	09202-07003	PIN	1	
19	09440-09043	SPRING	1	
20	09440-42002	SPRING	1	
21	06111-07004	BALL	2	
22	06111-11004	BALL	2	
23	09181-25030	SHIM (25X32X3)	1	

FIG.220F

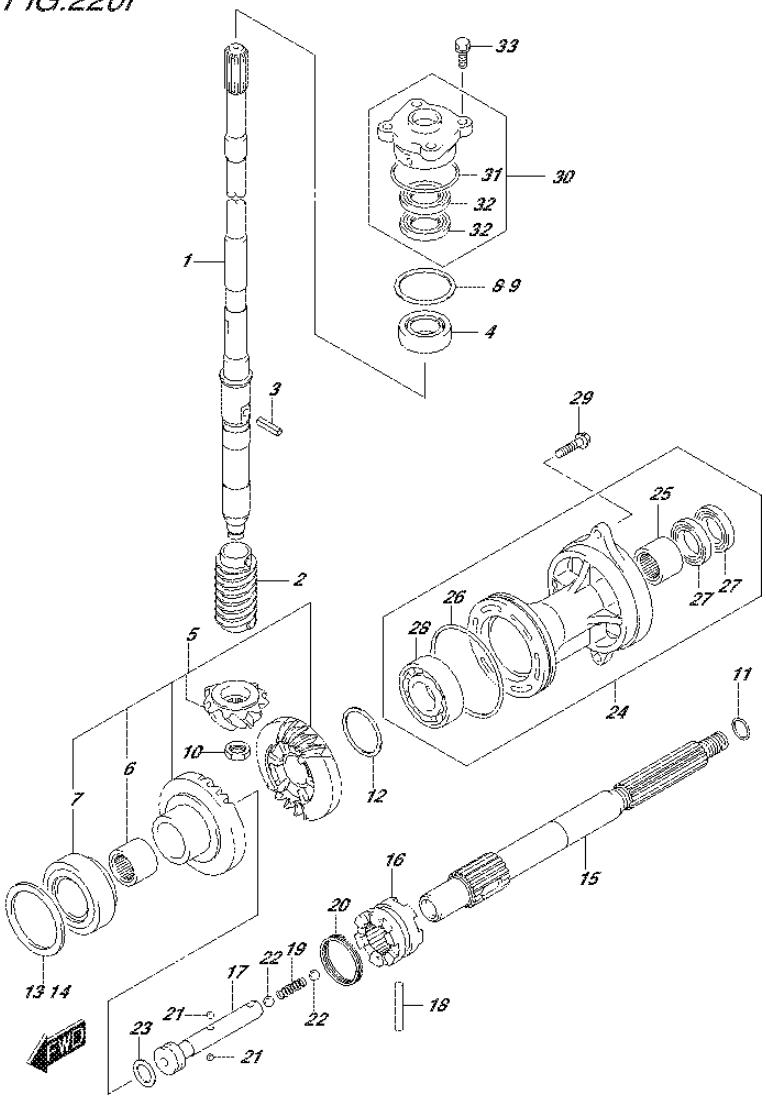

FIG.220F (1-J-8) TRANSMISSION (DF80A E40)

REF NO.	PART NO.	DESCRIPTION	Q'TY	REMARKS
24	56120-87L30-0EP	HOUSING, PROP SHAFT BRG (BLACK)	1	
25	09263-25067	.BEARING (25X32X26)	1	
26	09280-92004	.O RING (D:3.1 ID:89.4)	1	
27	09282-25001	.OIL SEAL (25X38X8)	2	
28	08113-60087	.BEARING	1	
29	09116-08122	BOLT (8X30)	2	
30	56130-87L01	HOUSING, DRIVE SHAFT OIL SEAL	1	
31	09280-46004	.O RING (D:3.5,ID:45.7)	1	
32	09282-22007	.OIL SEAL (22X36X6)	2	
33	09117-08110	BOLT (8X25)	4	

FIG.220G

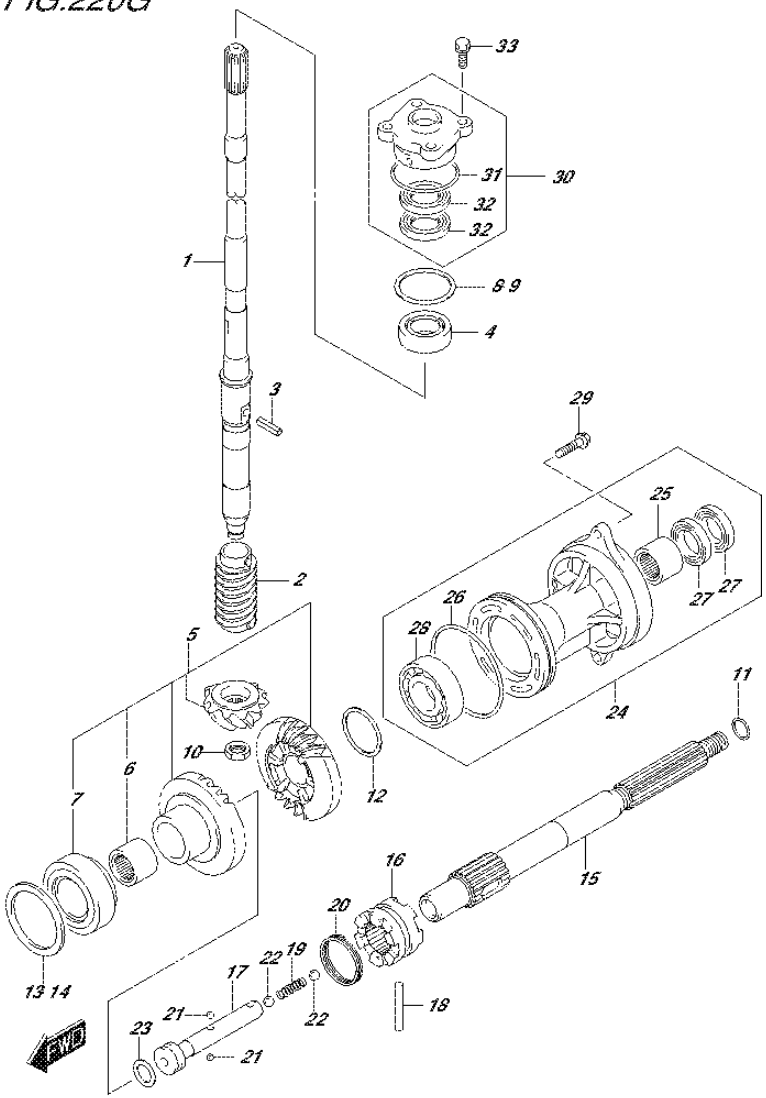

FIG.220G (1-J-9) TRANSMISSION (DF90A E01)

REF NO.	PART NO.	DESCRIPTION	Q'TY	REMARKS
1-1	57110-87L20	SHAFT ASSY, DRIVE (L)	1	W/TRANSOM(L)
1-2	57110-87L30	SHAFT ASSY, DRIVE (X)	1	W/TRANSOM(X)
2	57133-87L01	COLLAR, DRIVE SHAFT	1	
3	09205-05011	SPRING PIN (5X14)	1	
4	09265-25046	BEARING (25X52X19.25)	1	
5	57300-87880	PINION/GEAR SET	1	
6	09263-25067	.BEARING (25X32X26)	1	
7	09265-40003	.BEARING (40X75X26)	1	
8	57500-87873	SHIM SET, DRIVE SHAFT	1	
9-1	09181-40186	.SHIM (T:0.50)	1	
9-2	09181-41002	.SHIM (T:0.55)	1	
9-3	09181-41003	.SHIM (T:0.60)	1	
9-4	09181-41004	.SHIM (T:0.65)	1	
9-5	09181-41005	.SHIM (T:0.70)	1	
9-6	09181-41006	.SHIM (T:0.75)	1	
9-7	09181-40190	.SHIM (T:0.80)	1	
9-8	09181-41008	.SHIM (T:0.85)	1	
9-9	09181-41009	.SHIM (T:0.90)	1	
9-10	09181-41010	.SHIM (T:0.95)	1	
9-11	09181-40195	.SHIM (T:1.00)	1	
9-12	09181-41012	.SHIM (T:1.05)	1	
9-13	09181-41013	.SHIM (T:1.10)	1	
9-14	09181-41014	.SHIM (T:1.15)	1	
10	09140-14024	NUT	1	
11-1	09181-25130	SHIM (T:0.50)	1	PROP SHAFT REV THRUST
11-2	09181-25139	SHIM (T:1.00)	1	PROP SHAFT REV THRUST
11-3	09181-25143	SHIM (T:1.09)	1	PROP SHAFT REV THRUST
11-4	09181-25149	SHIM (T:1.21)	1	PROP SHAFT REV THRUST
11-5	09181-25153	SHIM (T:1.30)	1	PROP SHAFT REV THRUST
11-6	09181-25072	SHIM (T:1.40)	1	PROP SHAFT REV THRUST
11-7	09181-25073	SHIM (T:1.50)	1	PROP SHAFT REV THRUST
11-8	09181-25074	SHIM (T:1.60)	1	PROP SHAFT REV THRUST
11-9	09181-25075	SHIM (T:1.70)	1	PROP SHAFT REV THRUST

FIG.220G

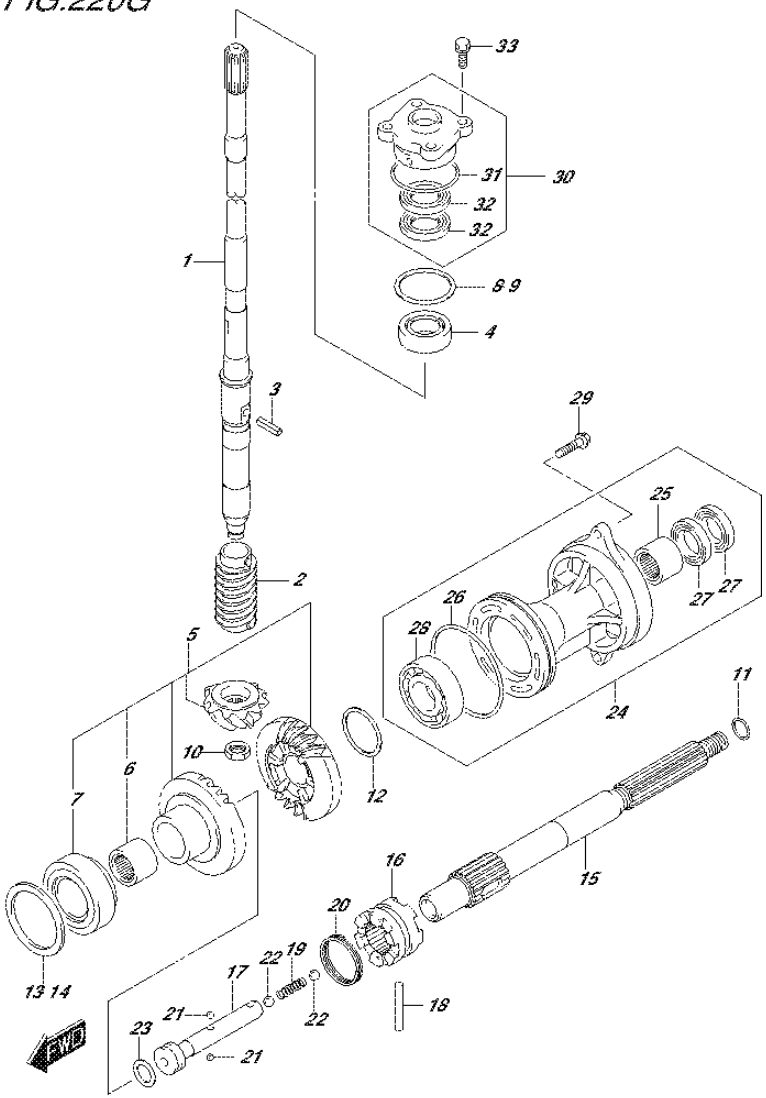

FIG.220G (1-J-10) TRANSMISSION (DF90A E01)

REF NO.	PART NO.	DESCRIPTION	Q'TY	REMARKS
12-1	09181-40018	SHIM (T:0.55)	1	REV GEAR
12-2	09181-40004	SHIM (T:0.60)	1	REV GEAR
12-3	09181-40005	SHIM (T:0.65)	1	REV GEAR
12-4	09181-40006	SHIM (T:0.70)	1	REV GEAR
12-5	09181-40007	SHIM (T:0.75)	1	REV GEAR
12-6	09181-40008	SHIM (T:0.80)	1	REV GEAR
12-7	09181-40009	SHIM (T:085)	1	REV GEAR
12-8	09181-40010	SHIM (T:0.90)	1	REV GEAR
12-9	09181-40011	SHIM (T:0.95)	1	REV GEAR
12-10	09181-40012	SHIM (T:1.00)	1	REV GEAR
12-11	09181-40013	SHIM (T:1.05)	1	REV GEAR
13	57500-87882	SHIM SET, FORWARD GEAR	1	FWD GEAR
14-1	09181-64002	.SHIM (T:0.55)	1	FWD GEAR
14-2	09181-64003	.SHIM (T:0.60)	1	FWD GEAR
14-3	09181-64004	.SHIM (T:0.65)	1	FWD GEAR
14-4	09181-64005	.SHIM (T:0.70)	1	FWD GEAR
14-5	09181-64006	.SHIM (T:0.75)	1	FWD GEAR
14-6	09181-64007	.SHIM (T:0.80)	1	FWD GEAR
14-7	09181-64008	.SHIM (T:0.85)	1	FWD GEAR
14-8	09181-64009	.SHIM (T:0.90)	1	FWD GEAR
14-9	09181-64010	.SHIM (T:0.95)	1	FWD GEAR
14-10	09181-64011	.SHIM (T:1.00)	1	FWD GEAR
15	57610-87L00	SHAFT, PROPELLER	1	
16	57621-87L10	SHIFTER, CLUTCH DOG	1	
17	57631-87L00	PIN, CONNECTOR	1	
18	09202-07003	PIN	1	
19	09440-09043	SPRING	1	
20	09440-42002	SPRING	1	
21	06111-07004	BALL	2	
22	06111-11004	BALL	2	
23	09181-25030	SHIM (25X32X3)	1	

FIG.220G

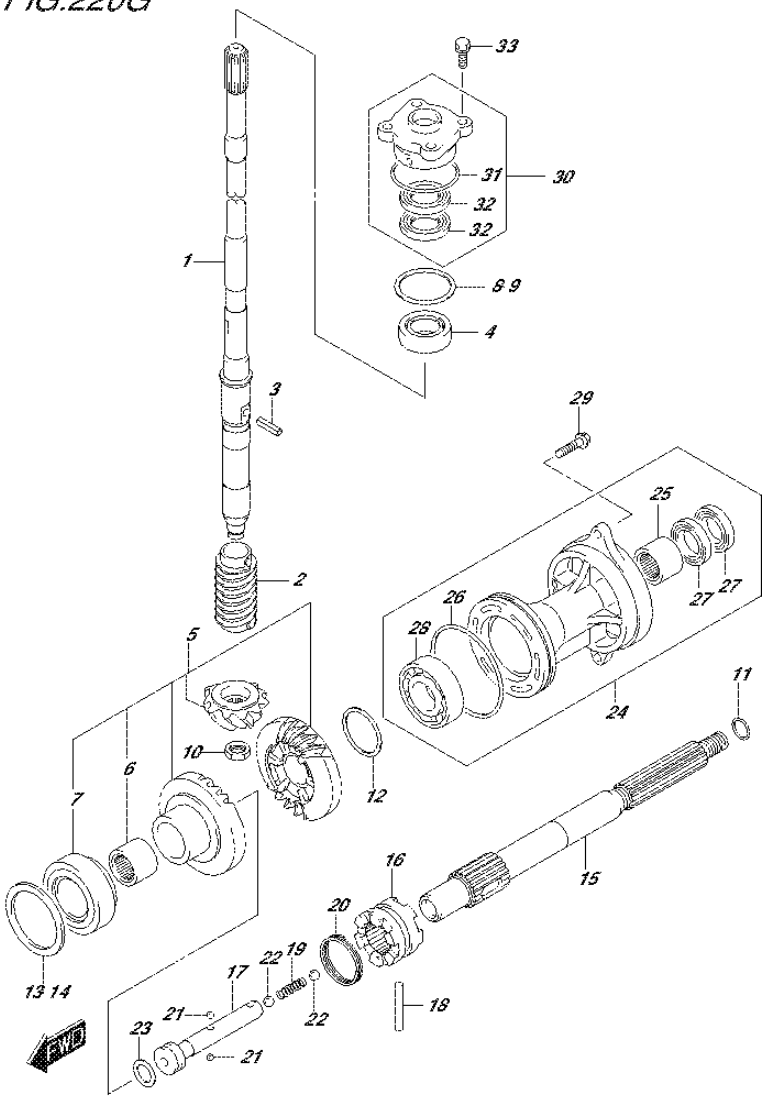

FIG.220G (1-J-11) TRANSMISSION (DF90A E01)

REF NO.	PART NO.	DESCRIPTION	Q'TY	REMARKS
24-1	56120-87L30-0EP	HOUSING, PROP SHAFT BRG (BLACK)	1	
24-2	56120-87L30-Y5S	HOUSING, PROP SHAFT BRG (WHITE)	1	
25	09263-25067	.BEARING (25X32X26)	1	
26	09280-92004	.O RING (D:3.1 ID:89.4)	1	
27	09282-25001	.OIL SEAL (25X38X8)	2	
28	08113-60087	.BEARING	1	
29	09116-08122	BOLT (8X30)	2	
30	56130-87L01	HOUSING, DRIVE SHAFT OIL SEAL	1	
31	09280-46004	.O RING (D:3.5,ID:45.7)	1	
32	09282-22007	.OIL SEAL (22X36X6)	2	
33	09117-08110	BOLT (8X25)	4	

FIG.220H

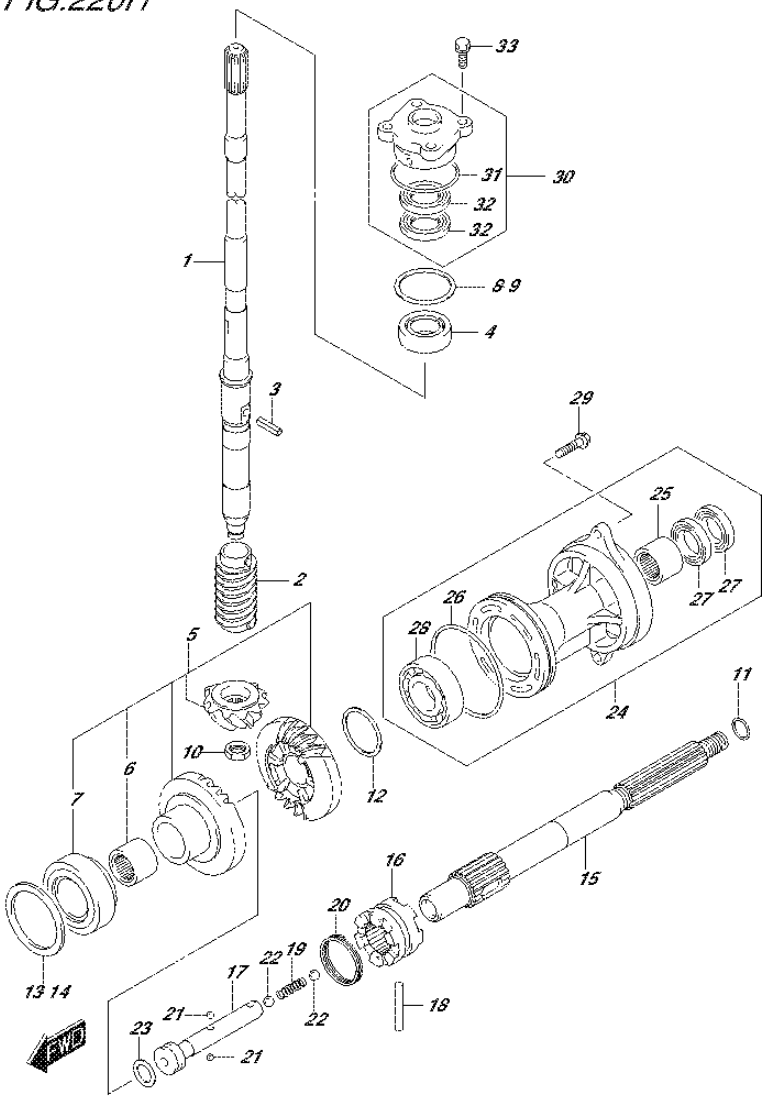

DF90A_E01_015_220H
TRANSMISSION

FIG.220H (1-J-12) TRANSMISSION (DF90A E40)

REF NO.	PART NO.	DESCRIPTION	Q'TY	REMARKS
1-1	57110-87L20	SHAFT ASSY, DRIVE (L)	1	W/TRANSOM(L)
1-2	57110-87L30	SHAFT ASSY, DRIVE (X)	1	W/TRANSOM(X)
2	57133-87L01	COLLAR, DRIVE SHAFT	1	
3	09205-05011	SPRING PIN (5X14)	1	
4	09265-25046	BEARING (25X52X19.25)	1	
5	57300-87880	PINION/GEAR SET	1	
6	09263-25067	.BEARING (25X32X26)	1	
7	09265-40003	.BEARING (40X75X26)	1	
8	57500-87873	SHIM SET, DRIVE SHAFT	1	
9-1	09181-40186	.SHIM (T:0.50)	1	
9-2	09181-41002	.SHIM (T:0.55)	1	
9-3	09181-41003	.SHIM (T:0.60)	1	
9-4	09181-41004	.SHIM (T:0.65)	1	
9-5	09181-41005	.SHIM (T:0.70)	1	
9-6	09181-41006	.SHIM (T:0.75)	1	
9-7	09181-40190	.SHIM (T:0.80)	1	
9-8	09181-41008	.SHIM (T:0.85)	1	
9-9	09181-41009	.SHIM (T:0.90)	1	
9-10	09181-41010	.SHIM (T:0.95)	1	
9-11	09181-40195	.SHIM (T:1.00)	1	
9-12	09181-41012	.SHIM (T:1.05)	1	
9-13	09181-41013	.SHIM (T:1.10)	1	
9-14	09181-41014	.SHIM (T:1.15)	1	
10	09140-14024	NUT	1	
11-1	09181-25130	SHIM (T:0.50)	1	PROP SHAFT REV THRUST
11-2	09181-25139	SHIM (T:1.00)	1	PROP SHAFT REV THRUST
11-3	09181-25143	SHIM (T:1.09)	1	PROP SHAFT REV THRUST
11-4	09181-25149	SHIM (T:1.21)	1	PROP SHAFT REV THRUST
11-5	09181-25153	SHIM (T:1.30)	1	PROP SHAFT REV THRUST
11-6	09181-25072	SHIM (T:1.40)	1	PROP SHAFT REV THRUST
11-7	09181-25073	SHIM (T:1.50)	1	PROP SHAFT REV THRUST
11-8	09181-25074	SHIM (T:1.60)	1	PROP SHAFT REV THRUST
11-9	09181-25075	SHIM (T:1.70)	1	PROP SHAFT REV THRUST

FIG.220H

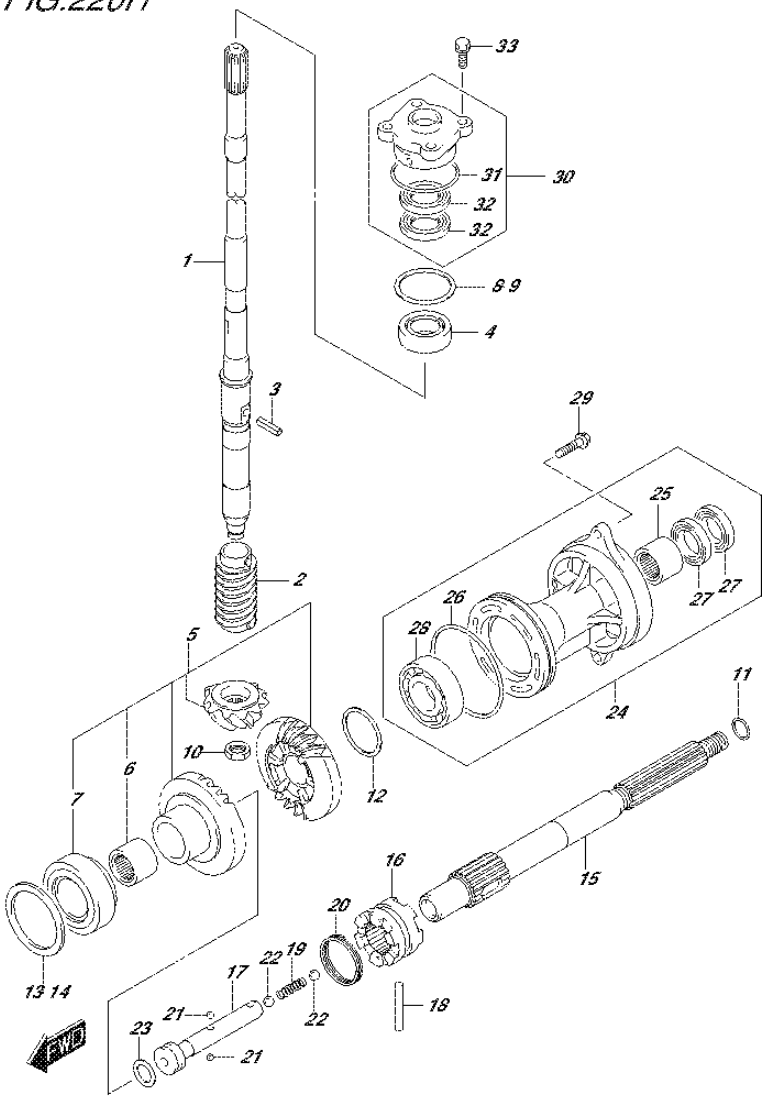

FIG.220H (1-J-13) TRANSMISSION (DF90A E40)

REF NO.	PART NO.	DESCRIPTION	Q'TY	REMARKS
12-1	09181-40018	SHIM (T:0.55)	1	REV GEAR
12-2	09181-40004	SHIM (T:0.60)	1	REV GEAR
12-3	09181-40005	SHIM (T:0.65)	1	REV GEAR
12-4	09181-40006	SHIM (T:0.70)	1	REV GEAR
12-5	09181-40007	SHIM (T:0.75)	1	REV GEAR
12-6	09181-40008	SHIM (T:0.80)	1	REV GEAR
12-7	09181-40009	SHIM (T:085)	1	REV GEAR
12-8	09181-40010	SHIM (T:0.90)	1	REV GEAR
12-9	09181-40011	SHIM (T:0.95)	1	REV GEAR
12-10	09181-40012	SHIM (T:1.00)	1	REV GEAR
12-11	09181-40013	SHIM (T:1.05)	1	REV GEAR
13	57500-87882	SHIM SET, FORWARD GEAR	1	FWD GEAR
14-1	09181-64002	.SHIM (T:0.55)	1	FWD GEAR
14-2	09181-64003	.SHIM (T:0.60)	1	FWD GEAR
14-3	09181-64004	.SHIM (T:0.65)	1	FWD GEAR
14-4	09181-64005	.SHIM (T:0.70)	1	FWD GEAR
14-5	09181-64006	.SHIM (T:0.75)	1	FWD GEAR
14-6	09181-64007	.SHIM (T:0.80)	1	FWD GEAR
14-7	09181-64008	.SHIM (T:0.85)	1	FWD GEAR
14-8	09181-64009	.SHIM (T:0.90)	1	FWD GEAR
14-9	09181-64010	.SHIM (T:0.95)	1	FWD GEAR
14-10	09181-64011	.SHIM (T:1.00)	1	FWD GEAR
15	57610-87L00	SHAFT, PROPELLER	1	
16	57621-87L10	SHIFTER, CLUTCH DOG	1	
17	57631-87L00	PIN, CONNECTOR	1	
18	09202-07003	PIN	1	
19	09440-09043	SPRING	1	
20	09440-42002	SPRING	1	
21	06111-07004	BALL	2	
22	06111-11004	BALL	2	
23	09181-25030	SHIM (25X32X3)	1	

FIG.220H

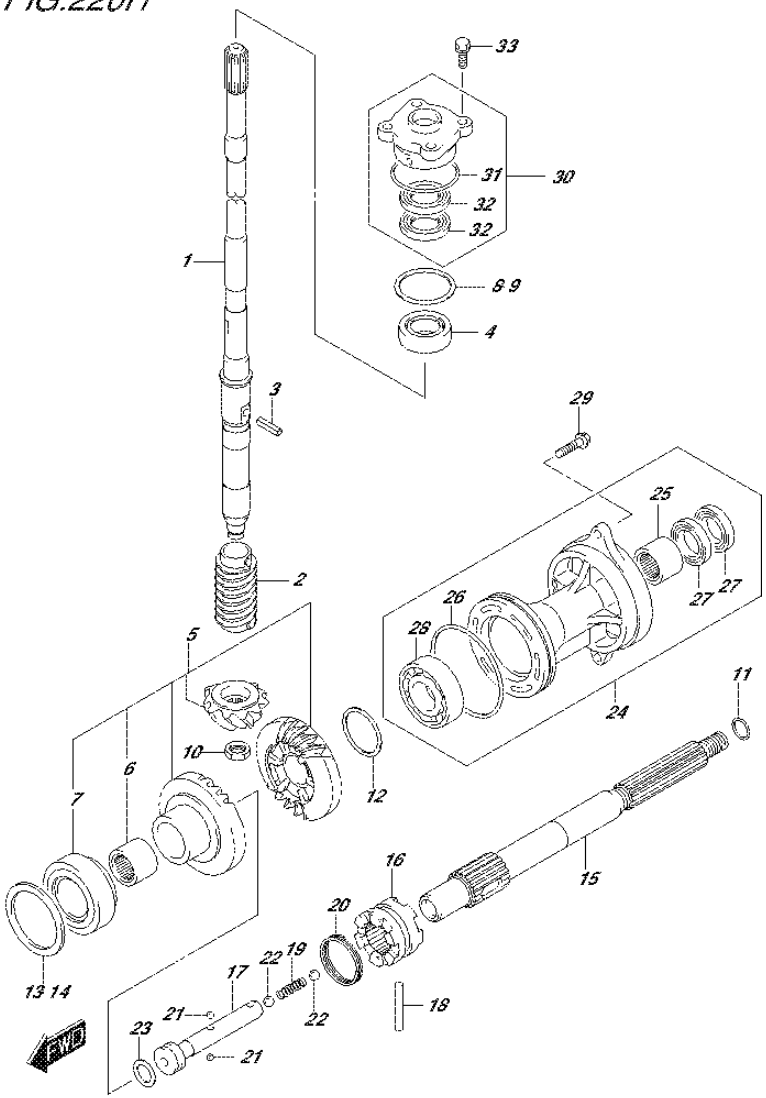

FIG.220H (1-J-14) TRANSMISSION (DF90A E40)

REF NO.	PART NO.	DESCRIPTION	Q'TY	REMARKS
24-1	56120-87L30-0EP	HOUSING, PROP SHAFT BRG (BLACK)	1	
24-2	56120-87L30-Y5S	HOUSING, PROP SHAFT BRG (WHITE)	1	
25	09263-25067	.BEARING (25X32X26)	1	
26	09280-92004	.O RING (D:3.1 ID:89.4)	1	
27	09282-25001	.OIL SEAL (25X38X8)	2	
28	08113-60087	.BEARING	1	
29	09116-08122	BOLT (8X30)	2	
30	56130-87L01	HOUSING, DRIVE SHAFT OIL SEAL	1	
31	09280-46004	.O RING (D:3.5,ID:45.7)	1	
32	09282-22007	.OIL SEAL (22X36X6)	2	
33	09117-08110	BOLT (8X25)	4	

FIG.220J

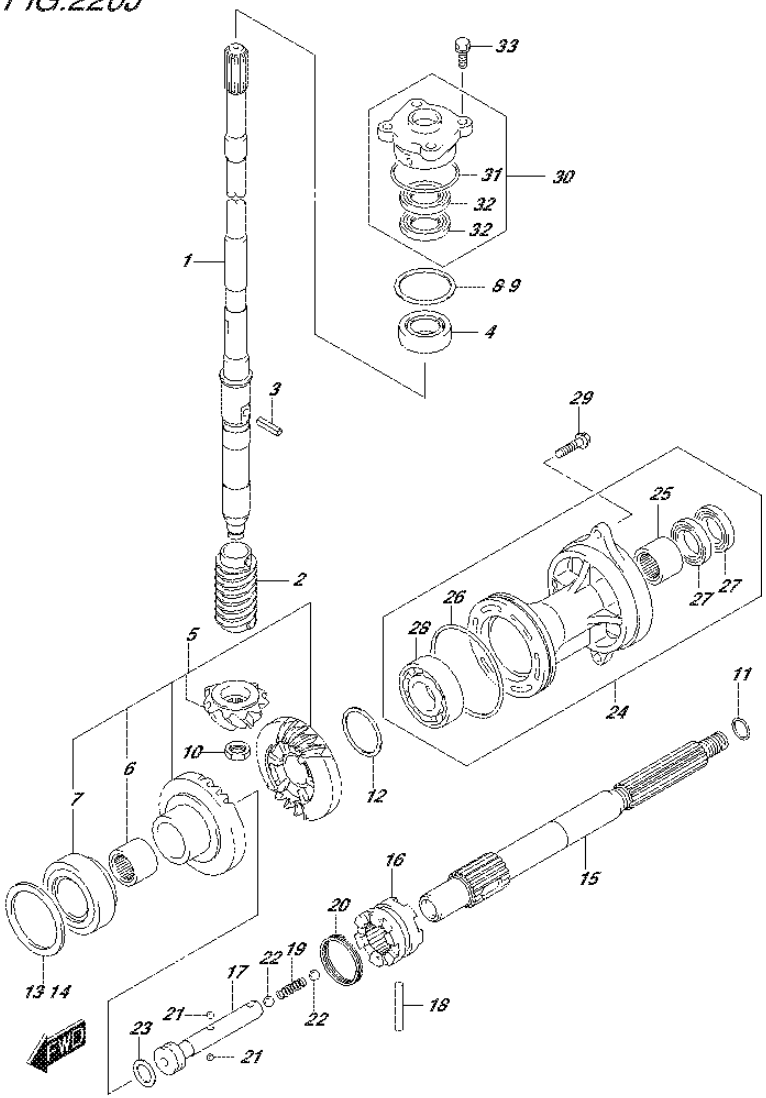

FIG.220J (1-J-15) TRANSMISSION (DF90ATH E01)

REF NO.	PART NO.	DESCRIPTION	Q'TY	REMARKS
1-1	57110-87L20	SHAFT ASSY, DRIVE (L)	1	W/TRANSOM(L)
1-2	57110-87L30	SHAFT ASSY, DRIVE (X)	1	W/TRANSOM(X)
2	57133-87L01	COLLAR, DRIVE SHAFT	1	
3	09205-05011	SPRING PIN (5X14)	1	
4	09265-25046	BEARING (25X52X19.25)	1	
5	57300-87880	PINION/GEAR SET	1	
6	09263-25067	.BEARING (25X32X26)	1	
7	09265-40003	.BEARING (40X75X26)	1	
8	57500-87873	SHIM SET, DRIVE SHAFT	1	
9-1	09181-40186	.SHIM (T:0.50)	1	
9-2	09181-41002	.SHIM (T:0.55)	1	
9-3	09181-41003	.SHIM (T:0.60)	1	
9-4	09181-41004	.SHIM (T:0.65)	1	
9-5	09181-41005	.SHIM (T:0.70)	1	
9-6	09181-41006	.SHIM (T:0.75)	1	
9-7	09181-40190	.SHIM (T:0.80)	1	
9-8	09181-41008	.SHIM (T:0.85)	1	
9-9	09181-41009	.SHIM (T:0.90)	1	
9-10	09181-41010	.SHIM (T:0.95)	1	
9-11	09181-40195	.SHIM (T:1.00)	1	
9-12	09181-41012	.SHIM (T:1.05)	1	
9-13	09181-41013	.SHIM (T:1.10)	1	
9-14	09181-41014	.SHIM (T:1.15)	1	
10	09140-14024	NUT	1	
11-1	09181-25130	SHIM (T:0.50)	1	PROP SHAFT REV THRUST
11-2	09181-25139	SHIM (T:1.00)	1	PROP SHAFT REV THRUST
11-3	09181-25143	SHIM (T:1.09)	1	PROP SHAFT REV THRUST
11-4	09181-25149	SHIM (T:1.21)	1	PROP SHAFT REV THRUST
11-5	09181-25153	SHIM (T:1.30)	1	PROP SHAFT REV THRUST
11-6	09181-25072	SHIM (T:1.40)	1	PROP SHAFT REV THRUST
11-7	09181-25073	SHIM (T:1.50)	1	PROP SHAFT REV THRUST
11-8	09181-25074	SHIM (T:1.60)	1	PROP SHAFT REV THRUST
11-9	09181-25075	SHIM (T:1.70)	1	PROP SHAFT REV THRUST

FIG.220J

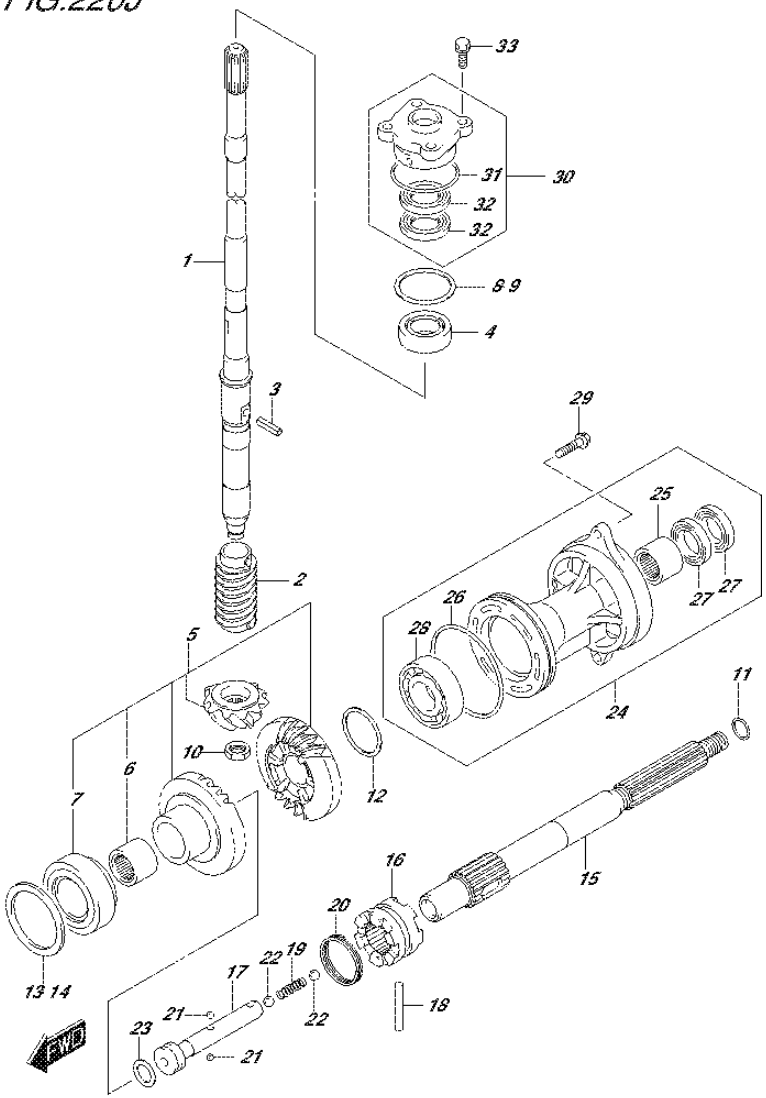

FIG.220J (1-K-2) TRANSMISSION (DF90ATH E01)

REF NO.	PART NO.	DESCRIPTION	Q'TY	REMARKS
12-1	09181-40018	SHIM (T:0.55)	1	REV GEAR
12-2	09181-40004	SHIM (T:0.60)	1	REV GEAR
12-3	09181-40005	SHIM (T:0.65)	1	REV GEAR
12-4	09181-40006	SHIM (T:0.70)	1	REV GEAR
12-5	09181-40007	SHIM (T:0.75)	1	REV GEAR
12-6	09181-40008	SHIM (T:0.80)	1	REV GEAR
12-7	09181-40009	SHIM (T:085)	1	REV GEAR
12-8	09181-40010	SHIM (T:0.90)	1	REV GEAR
12-9	09181-40011	SHIM (T:0.95)	1	REV GEAR
12-10	09181-40012	SHIM (T:1.00)	1	REV GEAR
12-11	09181-40013	SHIM (T:1.05)	1	REV GEAR
13	57500-87882	SHIM SET, FORWARD GEAR	1	FWD GEAR
14-1	09181-64002	.SHIM (T:0.55)	1	FWD GEAR
14-2	09181-64003	.SHIM (T:0.60)	1	FWD GEAR
14-3	09181-64004	.SHIM (T:0.65)	1	FWD GEAR
14-4	09181-64005	.SHIM (T:0.70)	1	FWD GEAR
14-5	09181-64006	.SHIM (T:0.75)	1	FWD GEAR
14-6	09181-64007	.SHIM (T:0.80)	1	FWD GEAR
14-7	09181-64008	.SHIM (T:0.85)	1	FWD GEAR
14-8	09181-64009	.SHIM (T:0.90)	1	FWD GEAR
14-9	09181-64010	.SHIM (T:0.95)	1	FWD GEAR
14-10	09181-64011	.SHIM (T:1.00)	1	FWD GEAR
15	57610-87L00	SHAFT, PROPELLER	1	
16	57621-87L10	SHIFTER, CLUTCH DOG	1	
17	57631-87L00	PIN, CONNECTOR	1	
18	09202-07003	PIN	1	
19	09440-09043	SPRING	1	
20	09440-42002	SPRING	1	
21	06111-07004	BALL	2	
22	06111-11004	BALL	2	
23	09181-25030	SHIM (25X32X3)	1	

FIG.220J

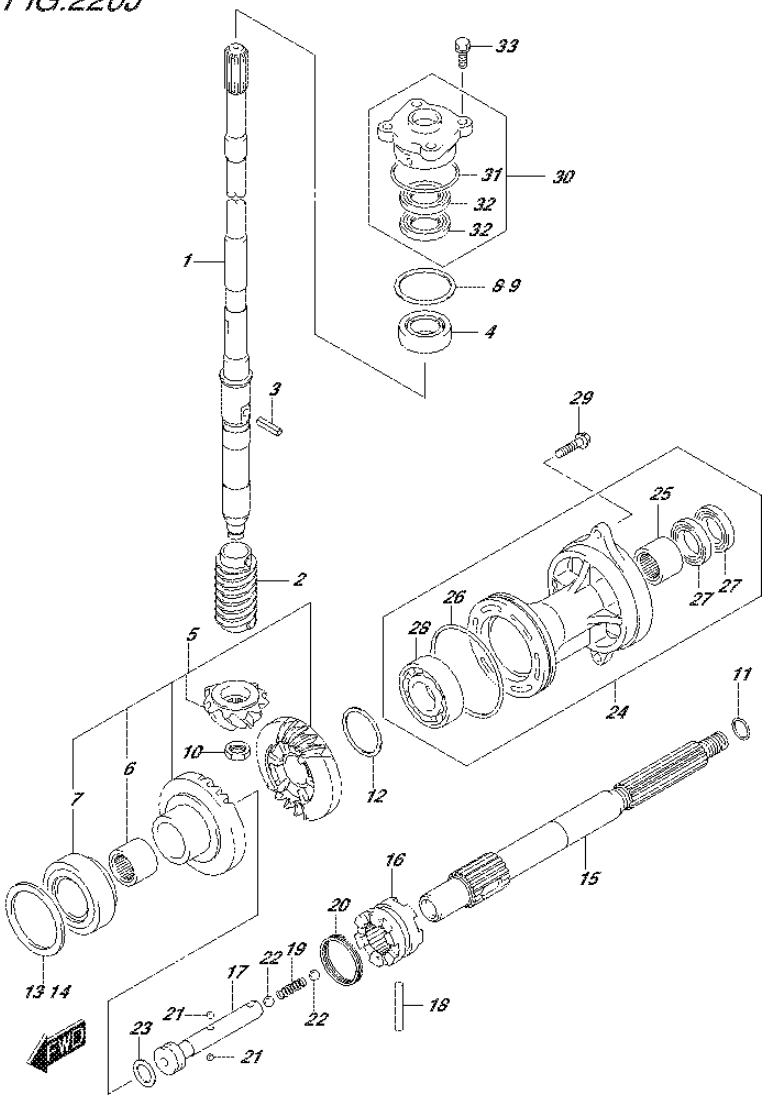

FIG.220J (1-K-3) TRANSMISSION (DF90ATH E01)

REF NO.	PART NO.	DESCRIPTION	Q'TY	REMARKS
24	56120-87L30-0EP	HOUSING, PROP SHAFT BRG (BLACK)	1	
25	09263-25067	.BEARING (25X32X26)	1	
26	09280-92004	.O RING (D:3.1 ID:89.4)	1	
27	09282-25001	.OIL SEAL (25X38X8)	2	
28	08113-60087	.BEARING	1	
29	09116-08122	BOLT (8X30)	2	
30	56130-87L01	HOUSING, DRIVE SHAFT OIL SEAL	1	
31	09280-46004	.O RING (D:3.5,ID:45.7)	1	
32	09282-22007	.OIL SEAL (22X36X6)	2	
33	09117-08110	BOLT (8X25)	4	

FIG.220K

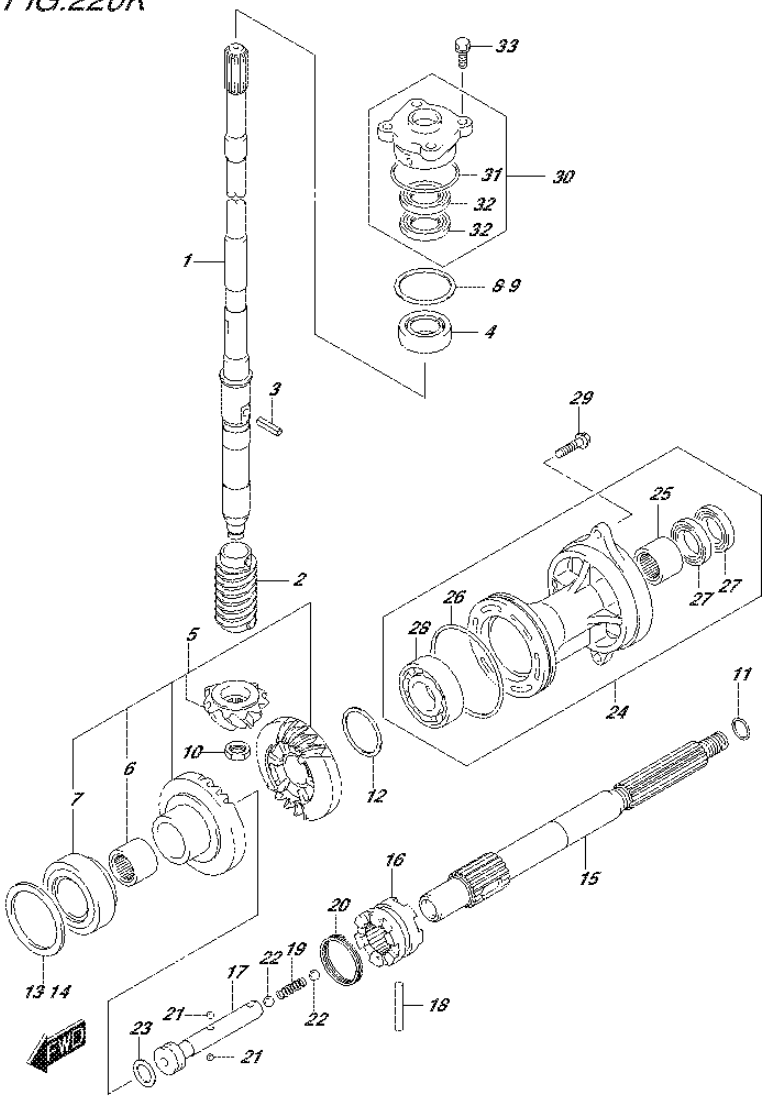

DF90A_E01_015_220K
TRANSMISSION

FIG.220K (1-K-4) TRANSMISSION (DF90ATH E40)

REF NO.	PART NO.	DESCRIPTION	Q'TY	REMARKS
1-1	57110-87L20	SHAFT ASSY, DRIVE (L)	1	W/TRANSOM(L)
1-2	57110-87L30	SHAFT ASSY, DRIVE (X)	1	W/TRANSOM(X)
2	57133-87L01	COLLAR, DRIVE SHAFT	1	
3	09205-05011	SPRING PIN (5X14)	1	
4	09265-25046	BEARING (25X52X19.25)	1	
5	57300-87880	PINION/GEAR SET	1	
6	09263-25067	.BEARING (25X32X26)	1	
7	09265-40003	.BEARING (40X75X26)	1	
8	57500-87873	SHIM SET, DRIVE SHAFT	1	
9-1	09181-40186	.SHIM (T:0.50)	1	
9-2	09181-41002	.SHIM (T:0.55)	1	
9-3	09181-41003	.SHIM (T:0.60)	1	
9-4	09181-41004	.SHIM (T:0.65)	1	
9-5	09181-41005	.SHIM (T:0.70)	1	
9-6	09181-41006	.SHIM (T:0.75)	1	
9-7	09181-40190	.SHIM (T:0.80)	1	
9-8	09181-41008	.SHIM (T:0.85)	1	
9-9	09181-41009	.SHIM (T:0.90)	1	
9-10	09181-41010	.SHIM (T:0.95)	1	
9-11	09181-40195	.SHIM (T:1.00)	1	
9-12	09181-41012	.SHIM (T:1.05)	1	
9-13	09181-41013	.SHIM (T:1.10)	1	
9-14	09181-41014	.SHIM (T:1.15)	1	
10	09140-14024	NUT	1	
11-1	09181-25130	SHIM (T:0.50)	1	PROP SHAFT REV THRUST
11-2	09181-25139	SHIM (T:1.00)	1	PROP SHAFT REV THRUST
11-3	09181-25143	SHIM (T:1.09)	1	PROP SHAFT REV THRUST
11-4	09181-25149	SHIM (T:1.21)	1	PROP SHAFT REV THRUST
11-5	09181-25153	SHIM (T:1.30)	1	PROP SHAFT REV THRUST
11-6	09181-25072	SHIM (T:1.40)	1	PROP SHAFT REV THRUST
11-7	09181-25073	SHIM (T:1.50)	1	PROP SHAFT REV THRUST
11-8	09181-25074	SHIM (T:1.60)	1	PROP SHAFT REV THRUST
11-9	09181-25075	SHIM (T:1.70)	1	PROP SHAFT REV THRUST

FIG.220K

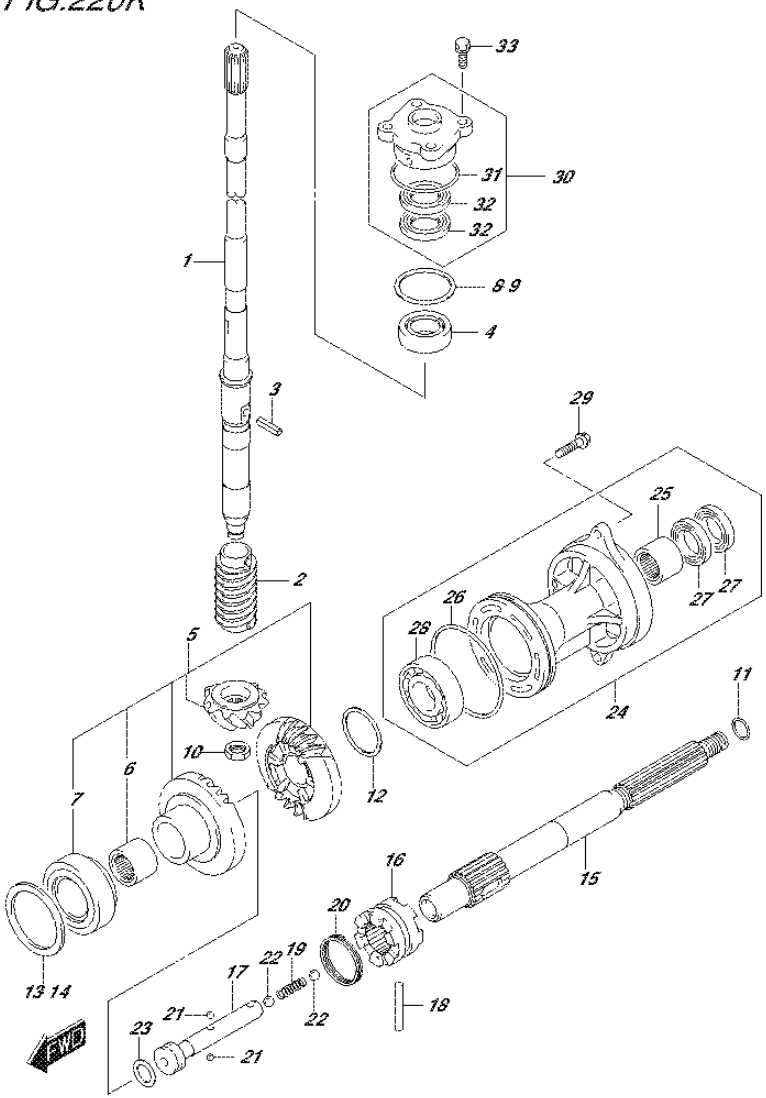

FIG.220K (1-K-5) TRANSMISSION (DF90ATH E40)

REF NO.	PART NO.	DESCRIPTION	Q'TY	REMARKS
12-1	09181-40018	SHIM (T:0.55)	1	REV GEAR
12-2	09181-40004	SHIM (T:0.60)	1	REV GEAR
12-3	09181-40005	SHIM (T:0.65)	1	REV GEAR
12-4	09181-40006	SHIM (T:0.70)	1	REV GEAR
12-5	09181-40007	SHIM (T:0.75)	1	REV GEAR
12-6	09181-40008	SHIM (T:0.80)	1	REV GEAR
12-7	09181-40009	SHIM (T:085)	1	REV GEAR
12-8	09181-40010	SHIM (T:0.90)	1	REV GEAR
12-9	09181-40011	SHIM (T:0.95)	1	REV GEAR
12-10	09181-40012	SHIM (T:1.00)	1	REV GEAR
12-11	09181-40013	SHIM (T:1.05)	1	REV GEAR
13	57500-87882	SHIM SET, FORWARD GEAR	1	FWD GEAR
14-1	09181-64002	.SHIM (T:0.55)	1	FWD GEAR
14-2	09181-64003	.SHIM (T:0.60)	1	FWD GEAR
14-3	09181-64004	.SHIM (T:0.65)	1	FWD GEAR
14-4	09181-64005	.SHIM (T:0.70)	1	FWD GEAR
14-5	09181-64006	.SHIM (T:0.75)	1	FWD GEAR
14-6	09181-64007	.SHIM (T:0.80)	1	FWD GEAR
14-7	09181-64008	.SHIM (T:0.85)	1	FWD GEAR
14-8	09181-64009	.SHIM (T:0.90)	1	FWD GEAR
14-9	09181-64010	.SHIM (T:0.95)	1	FWD GEAR
14-10	09181-64011	.SHIM (T:1.00)	1	FWD GEAR
15	57610-87L00	SHAFT, PROPELLER	1	
16	57621-87L10	SHIFTER, CLUTCH DOG	1	
17	57631-87L00	PIN, CONNECTOR	1	
18	09202-07003	PIN	1	
19	09440-09043	SPRING	1	
20	09440-42002	SPRING	1	
21	06111-07004	BALL	2	
22	06111-11004	BALL	2	
23	09181-25030	SHIM (25X32X3)	1	

FIG.220K

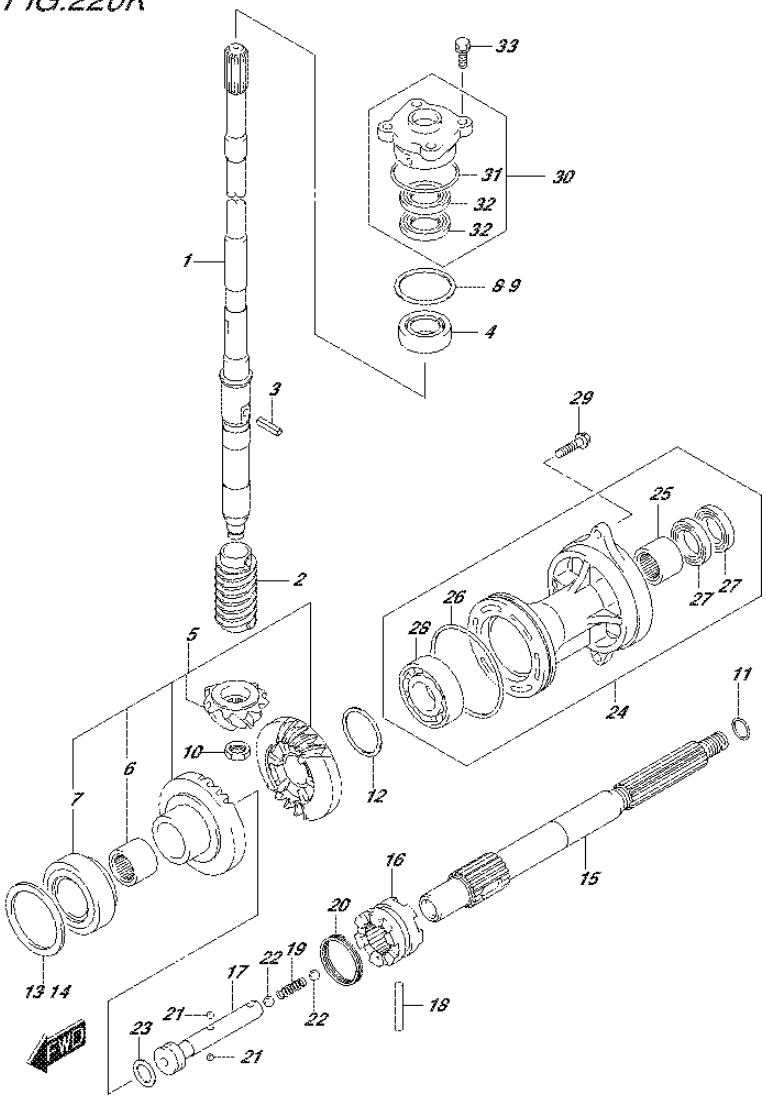

FIG.220K (1-K-6) TRANSMISSION (DF90ATH E40)

REF NO.	PART NO.	DESCRIPTION	Q'TY	REMARKS
24	56120-87L30-0EP	HOUSING, PROP SHAFT BRG (BLACK)	1	
25	09263-25067	.BEARING (25X32X26)	1	
26	09280-92004	.O RING (D:3.1 ID:89.4)	1	
27	09282-25001	.OIL SEAL (25X38X8)	2	
28	08113-60087	.BEARING	1	
29	09116-08122	BOLT (8X30)	2	
30	56130-87L01	HOUSING, DRIVE SHAFT OIL SEAL	1	
31	09280-46004	.O RING (D:3.5,ID:45.7)	1	
32	09282-22007	.OIL SEAL (22X36X6)	2	
33	09117-08110	BOLT (8X25)	4	

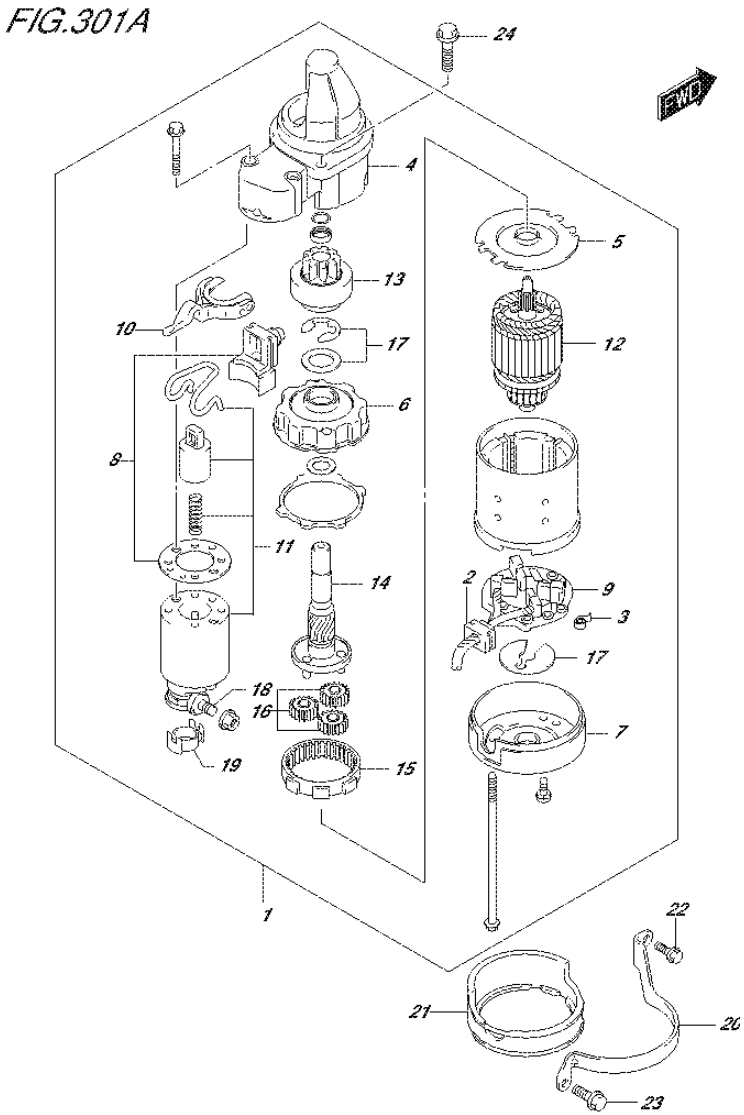

FIG.301A (1-K-7) STARTING MOTOR

REF NO.	PART NO.	DESCRIPTION	Q'TY	REMARKS
1	31100-96J02	STARTING MOTOR	1	
2	31131-90J01	.BRUSH SET, PLUS	1	
3	31135-90J00	.SPRING	4	
4	31151-94J01	.CASE, GEAR	1	
5	31152-90J00	.PLATE, CENTER	1	
6	31153-90J00	.BRACKET, GEAR	1	
7	31170-90J00	.COVER, STARTER MOTOR REAR	1	
8	31171-96J00	.COVER KIT, DUST	1	
9	31173-90J02	.HOLDER, BRUSH	1	
10	31191-96J00	.LEVER, SHIFT	1	
11	31220-94J00	.SWITCH, MAGNET	1	
12	31310-90J00	.ARMATURE	1	
13	31320-93J00	.PINION	1	
14	31341-93J00	.SHAFT, PINION	1	
15	31343-90J00	.INTERNAL GEAR	1	
16	31344-90J00	.GEAR, PLANETARY	3	
17	31360-93J01	.WASHER SET, STOPPER	1	
18	31913-93J00	.TERMINAL	1	
19	31914-93J00	.CAP, TERMINAL	1	
20	31912-87L00	BAND, STARTING MOTOR	1	
21	31918-87L00	DAMPER, LOWER	1	
22	01550-06167	BOLT	1	
23	01550-08207	BOLT	1	
24	01550-08357	BOLT	2	

FIG.303A

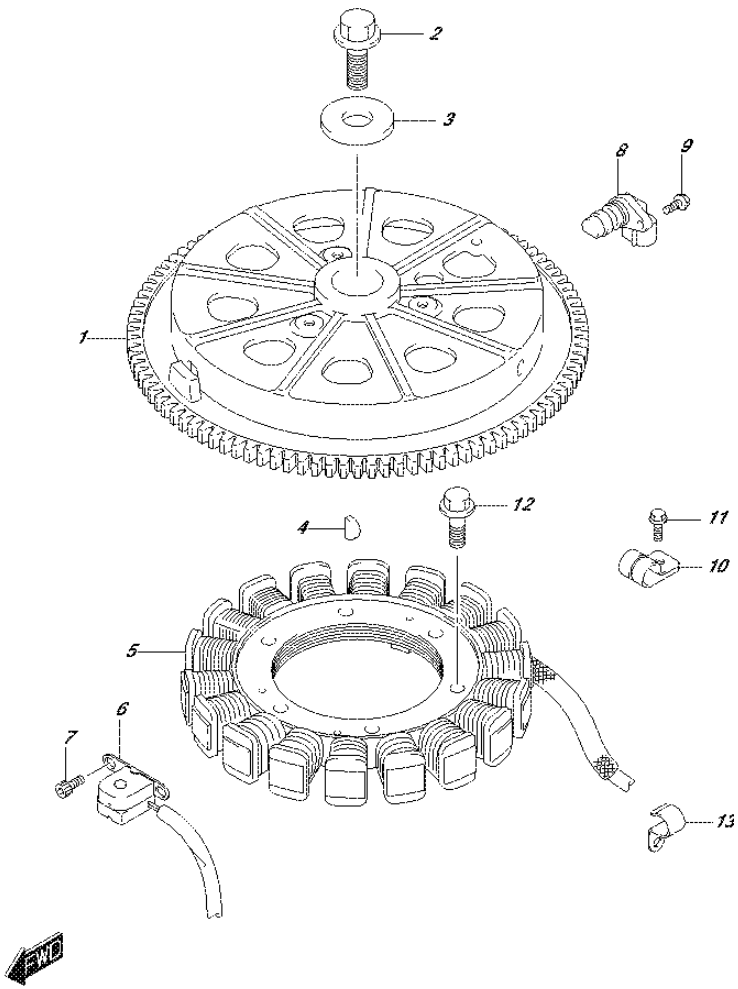

FIG.303A (1-K-8) MAGNETO

REF NO.	PART NO.	DESCRIPTION	Q'TY	REMARKS
1	32102-87L00	FLYWHEEL	1	
2	09103-16004	BOLT (16X50)	1	
3	09160-16047	WASHER (16.5X48.5X4.5)	1	
4	09420-04008	KEY	1	
5	32120-87L10	COIL, BATTERY CHARGING	1	
6	32160-87L00	COIL, IGNITION TIMING	1	
7	09106-05030	BOLT (5X10)	2	
8	33220-64L10	SENSOR ASSY, CAM POSITION	1	
9	01547-06167	BOLT	1	
10	09403-13408	CLAMP	2	
11	01550-06127	BOLT	2	
12	09103-06211	BOLT (6X25)	3	
13	09403-20301	CLAMP	1	

FIG.310A

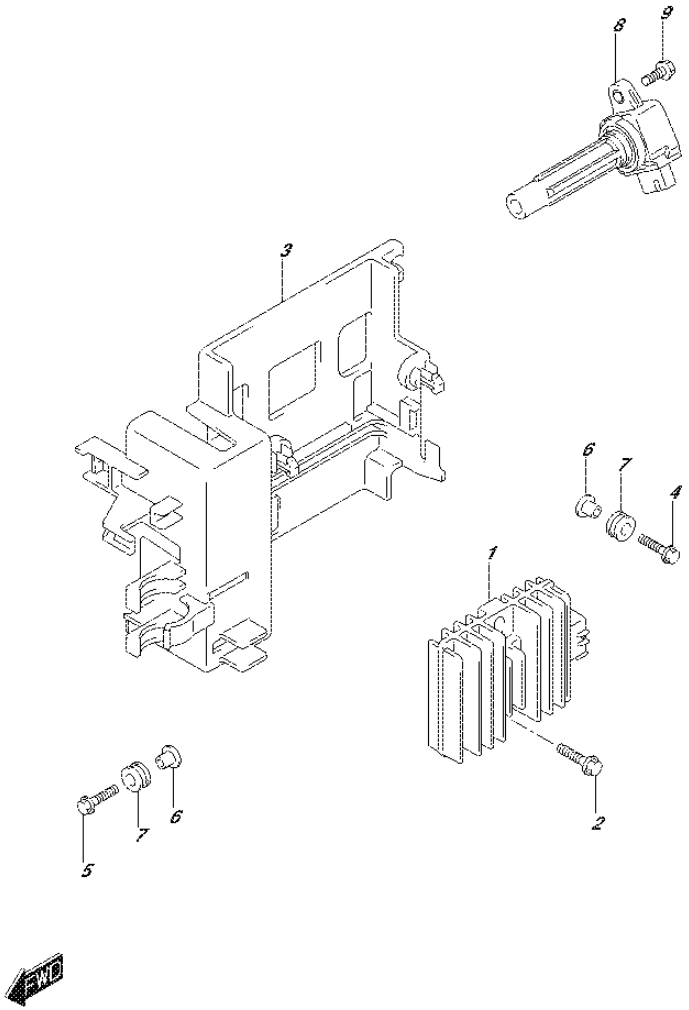

FIG.310A (1-K-9) RECTIFIER/IGNITION COIL

REF NO.	PART NO.	DESCRIPTION	Q'TY	REMARKS
1	32800-87L00	RECTIFIER/REGULATOR ASSY	1	
2	01550-06257	BOLT	2	
3	32890-87L01	HOLDER, ELECTRIC PARTS	1	
4	09116-06202	BOLT (6X25)	2	
5	01550-06257	BOLT	1	
6	09169-06062	WASHER	3	
7	09320-09016	CUSHION	3	
8	33410-87L00	COIL ASSY, IGNITION	4	
9	01547-06207	BOLT	4	

FIG.315A

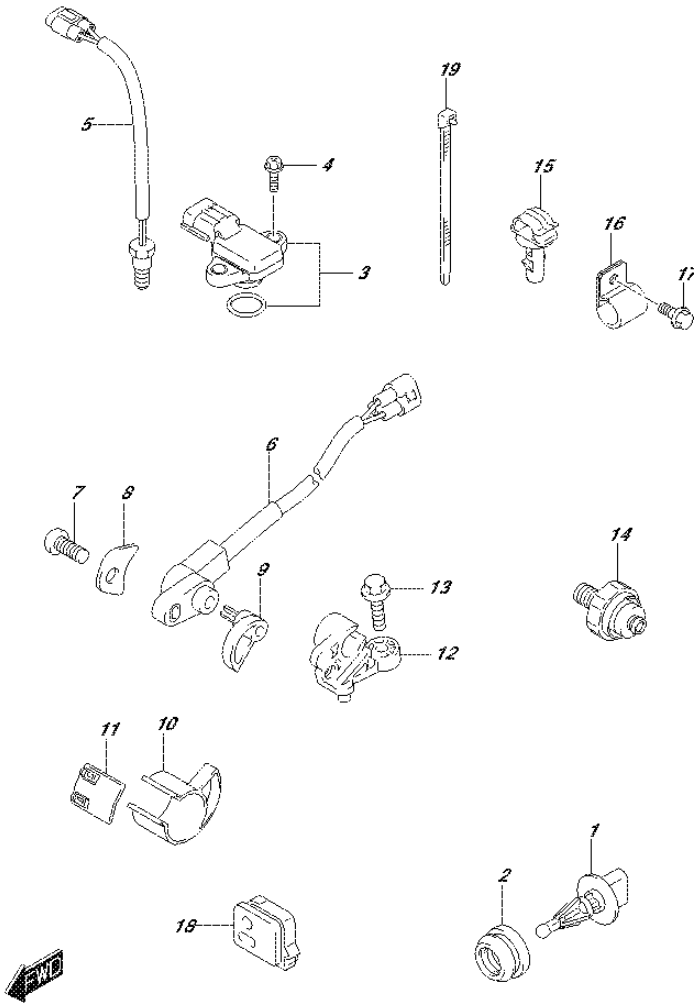

FIG.315A (1-K-10) SENSOR

REF NO.	PART NO.	DESCRIPTION	Q'TY	REMARKS
1	13650-52G00	SENSOR, INLET AIR TEMP	1	
2	13655-87J00	GROMMET, AIR TEMP SENSOR	1	
3	18590-68H00	SENSOR, PRESSURE	1	
4	02162-05207	SCREW	2	
5	34830-87J20	SENSOR ASSY, CYLINDER TEMP	1	
6	34840-98J11	SENSOR ASSY, TRIM	1	
7	09125-05046	SCREW (5X12)	1	
8	34846-87L00	WASHER (5.5X12X0.8)	1	
9	34841-87L10	LEVER, TRIM SENSOR	1	
10	34842-87L01	CAM, TRIM SENSOR UPPER	1	
11	34843-87L00	CAM, TRIM SENSOR LOWER	1	
12	34845-87L10	BRACKET, TRIM SENSOR	1	
13	09103-06093	BOLT (6X20)	1	
14	37820-99E01	SWITCH, OIL PRESSURE	1	
15	09403-07338	CLAMP	1	
16	09403-19409	CLAMP	1	
17	29103-93J00	BOLT, PTT CABLE CLAMP	1	
18	36656-87L00	GROMMET, PTT CABLE	1	
19	09407-14407	CLAMP (L:145)	2	

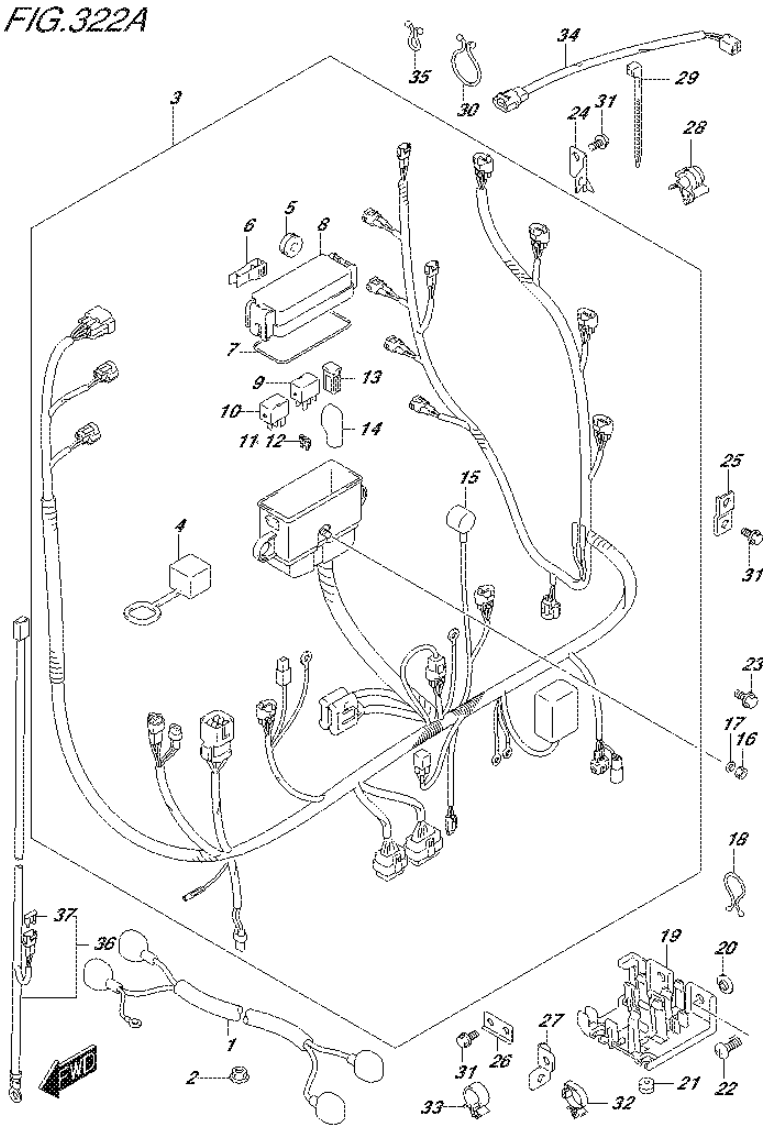

FIG.322A (1-K-11) HARNESS

REF NO.	PART NO.	DESCRIPTION	Q'TY	REMARKS
1	33810-90J10	CABLE, STARTER MOTOR	1	
2	08316-10087	NUT	1	
3	36610-87L60	HARNESS ASSY, WIRING	1	
4	33634-96J00	.CAP, SERVICE CONNECTOR	1	
5	09320-08021	.CUSHION	2	
6	36737-96J00	.PULLER, FUSE	1	
7	36721-96J00	.O RING, UPPER COVER	1	
8	36738-87L00	.COVER, FUSE CASE UPPER	1	
9	38860-76F01	.RELAY, ENG CONTROL UNIT	1	
10	38860-76F01	.RELAY ASSY, STARTER MOTOR	1	
11	09481-10501	.FUSE (10A)	3	
12	09481-30501	.FUSE (30A)	3	
13	09481-40401	.FUSE (40A)	2	
14	36612-96J00	.CAP, TERMINAL	1	
15	36618-43410	.CAP, OIL PRESSURE SWITCH	1	
16	08310-00067	NUT	1	
17	08321-01067	WASHER	1	
18	09408-00021	CLIP (ID:16)	1	
19	36616-87L00	HOLDER, CABLE	1	
20	09169-06053	WASHER	2	
21	09320-04009	BUSH	2	
22	02142-06167	SCREW	2	
23	01550-06127	BOLT	1	
24	36617-87L00	CLAMP, HARNESS	1	
25	36617-93J00	BRACKET, HARNESS	1	
26	36617-87L10	CLAMP, HARNESS	1	
27	36617-87L20	CLAMP, HARNESS	1	
28	09403-07308	CLAMP	1	
29	09407-14407	CLAMP (L:145)	1	

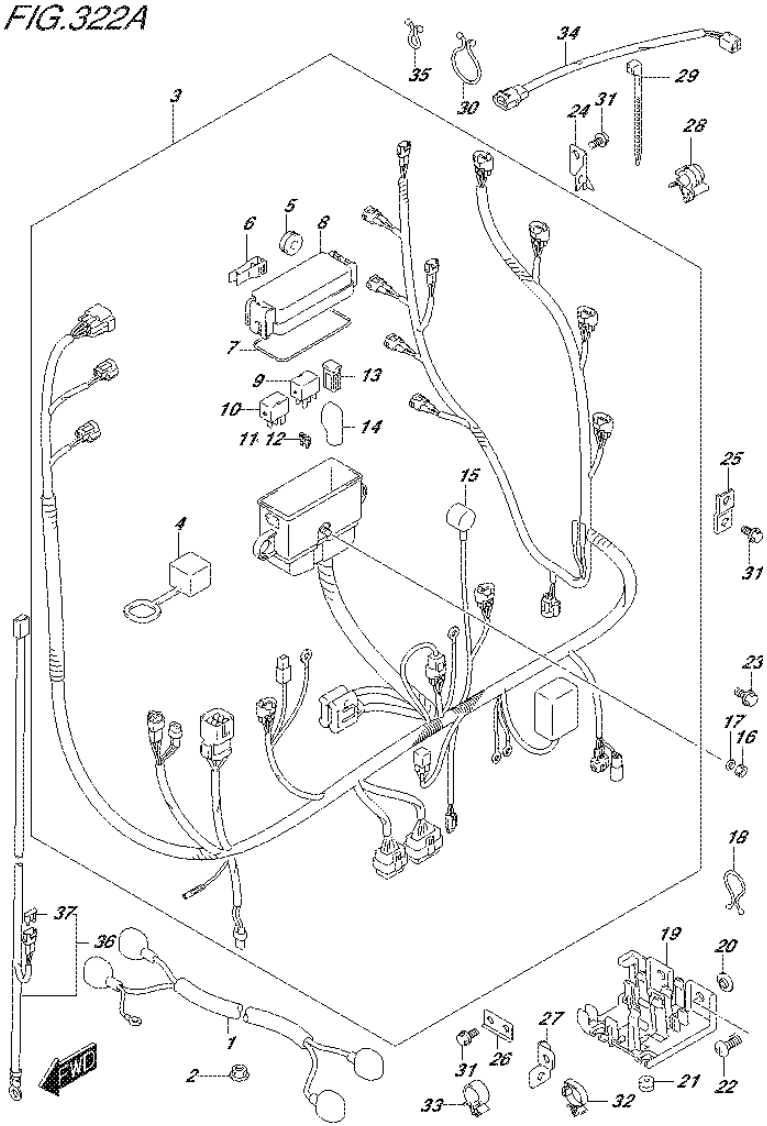

FIG.322A (1-K-12) HARNESS

REF NO.	PART NO.	DESCRIPTION	Q'TY	REMARKS
30	09408-00024	CLIP (ID:23)	1	
31	01550-06127	BOLT	2	
32	09403-11321	CLAMP	1	
33	09403-12409	CLAMP	1	
34	36611-87L00	HARNESS ASSY, WIRING SUB	1	
35	09408-00020	CLIP	1	
36	36625-93J10	LEAD, BATTERY (L:6500)	1	OPT
37	09481-15501	.FUSE (15A)	1	OPT

FIG.326A

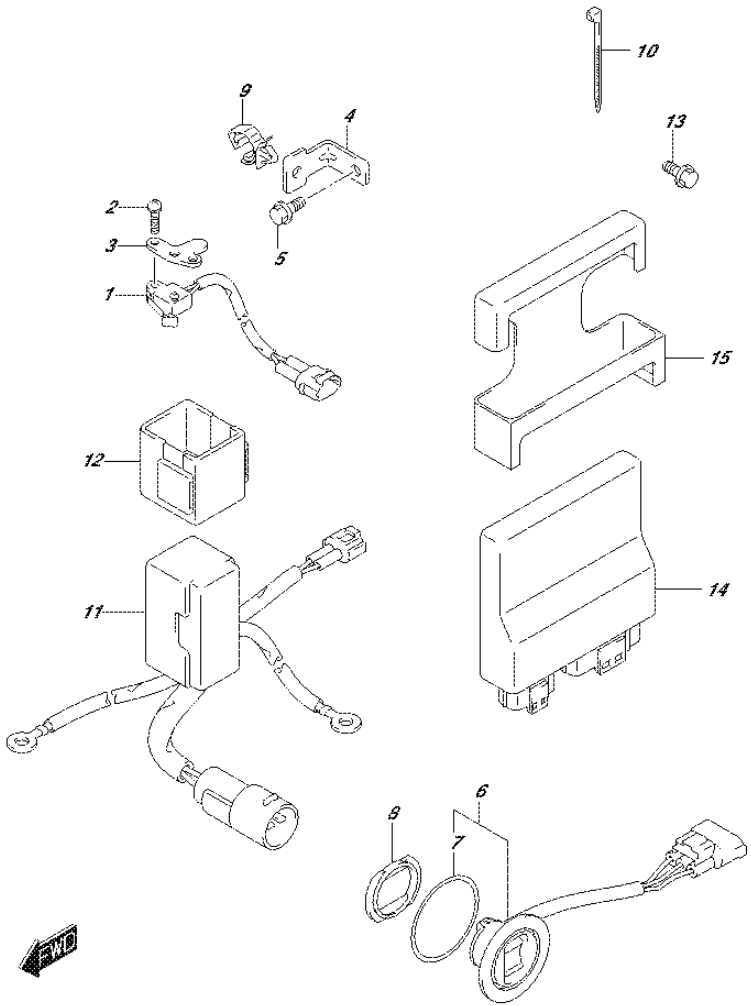

FIG.326A (1-K-13) PTT SWITCH/ENGINE CONTROL UNIT (DF70A E01)

REF NO.	PART NO.	DESCRIPTION	Q'TY	REMARKS
1	37721-93J00	SWITCH ASSY, NEUTRAL	1	
2	09137-04004	SCREW (4X16)	2	
3	37726-90J10	BRACKET, NEUTRAL SWITCH	1	
4	37726-87L00	BRACKET, SWITCH LEAD CLAMP	1	
5	01550-06127	BOLT	1	
6	37850-92J00	SWITCH ASSY, PTT	1	
7	37856-92J00	.TAPE, PTT SWITCH	1	
8	37857-92J00	BUSH, PTT SWITCH	1	
9	09403-11321	CLAMP	1	
10	09407-10404	CLAMP (L:100)	1	
11	38410-93J12	RELAY ASSY, PTT	1	
12	38415-93J00	HOLDER, PTT RELAY	1	
13	01550-06127	BOLT	1	
14	33930-87LG0	UNIT, ENGINE CONTROL	1	
15	33925-92J00	CUSHION, ENGINE CONTROL UNIT	1	

FIG.326B

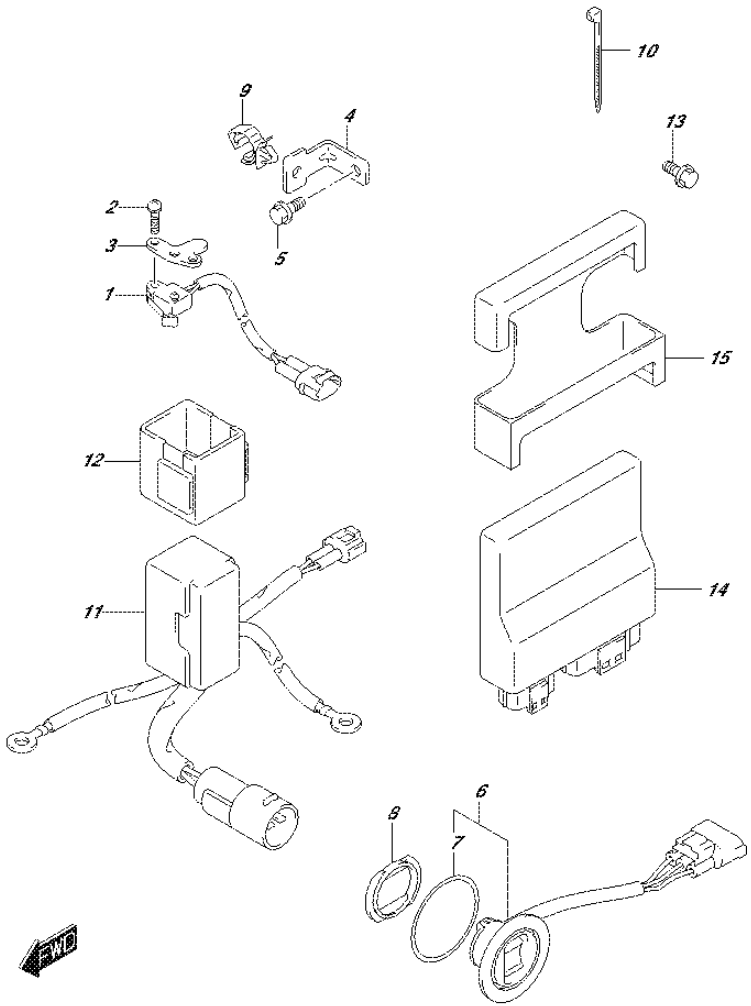

FIG.326B (1-K-14) PTT SWITCH/ENGINE CONTROL UNIT (DF70A E40)

REF NO.	PART NO.	DESCRIPTION	Q'TY	REMARKS
1	37721-93J00	SWITCH ASSY, NEUTRAL	1	
2	09137-04004	SCREW (4X16)	2	
3	37726-90J10	BRACKET, NEUTRAL SWITCH	1	
4	37726-87L00	BRACKET, SWITCH LEAD CLAMP	1	
5	01550-06127	BOLT	1	
6	37850-92J00	SWITCH ASSY, PTT	1	
7	37856-92J00	.TAPE, PTT SWITCH	1	
8	37857-92J00	BUSH, PTT SWITCH	1	
9	09403-11321	CLAMP	1	
10	09407-10404	CLAMP (L:100)	1	
11	38410-93J12	RELAY ASSY, PTT	1	
12	38415-93J00	HOLDER, PTT RELAY	1	
13	01550-06127	BOLT	1	
14	33930-87LH0	UNIT, ENGINE CONTROL	1	
15	33925-92J00	CUSHION, ENGINE CONTROL UNIT	1	

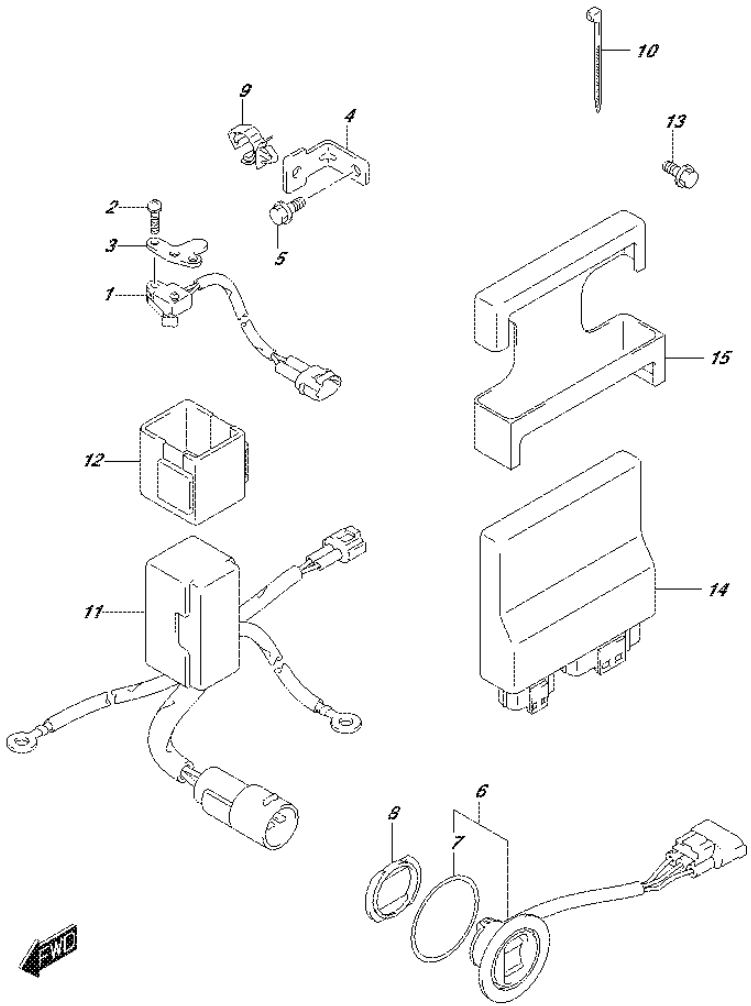

FIG.326C (1-K-15) PTT SWITCH/ENGINE CONTROL UNIT (DF70ATH E01)

REF NO.	PART NO.	DESCRIPTION	Q'TY	REMARKS
1	37721-93J00	SWITCH ASSY, NEUTRAL	1	
2	09137-04004	SCREW (4X16)	2	
3	37726-90J10	BRACKET, NEUTRAL SWITCH	1	
4	37726-87L00	BRACKET, SWITCH LEAD CLAMP	1	
5	01550-06127	BOLT	1	
6	37850-92J00	SWITCH ASSY, PTT	1	
7	37856-92J00	.TAPE, PTT SWITCH	1	
8	37857-92J00	BUSH, PTT SWITCH	1	
9	09403-11321	CLAMP	1	
10	09407-10404	CLAMP (L:100)	1	
11	38410-93J12	RELAY ASSY, PTT	1	
12	38415-93J00	HOLDER, PTT RELAY	1	
13	01550-06127	BOLT	1	
14	33930-87LG0	UNIT, ENGINE CONTROL	1	
15	33925-92J00	CUSHION, ENGINE CONTROL UNIT	1	

FIG.326D

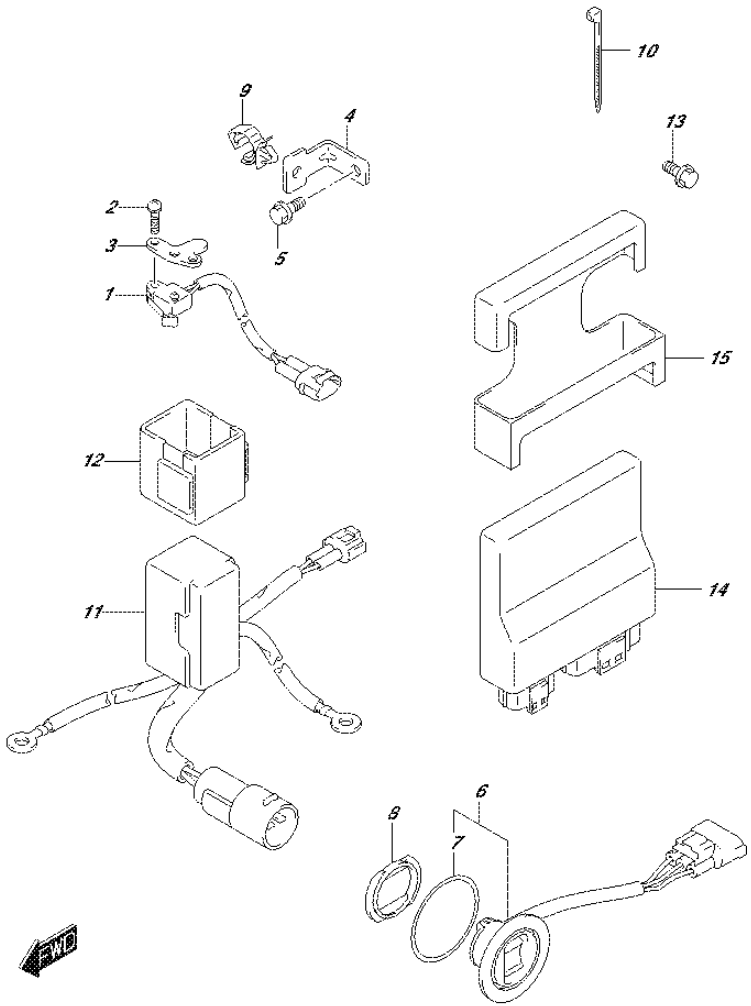

FIG.326D (1-L-2) PTT SWITCH/ENGINE CONTROL UNIT (DF70ATH E40)

REF NO.	PART NO.	DESCRIPTION	Q'TY	REMARKS
1	37721-93J00	SWITCH ASSY, NEUTRAL	1	
2	09137-04004	SCREW (4X16)	2	
3	37726-90J10	BRACKET, NEUTRAL SWITCH	1	
4	37726-87L00	BRACKET, SWITCH LEAD CLAMP	1	
5	01550-06127	BOLT	1	
6	37850-92J00	SWITCH ASSY, PTT	1	
7	37856-92J00	.TAPE, PTT SWITCH	1	
8	37857-92J00	BUSH, PTT SWITCH	1	
9	09403-11321	CLAMP	1	
10	09407-10404	CLAMP (L:100)	1	
11	38410-93J12	RELAY ASSY, PTT	1	
12	38415-93J00	HOLDER, PTT RELAY	1	
13	01550-06127	BOLT	1	
14	33930-87LH0	UNIT, ENGINE CONTROL	1	
15	33925-92J00	CUSHION, ENGINE CONTROL UNIT	1	

FIG.326E

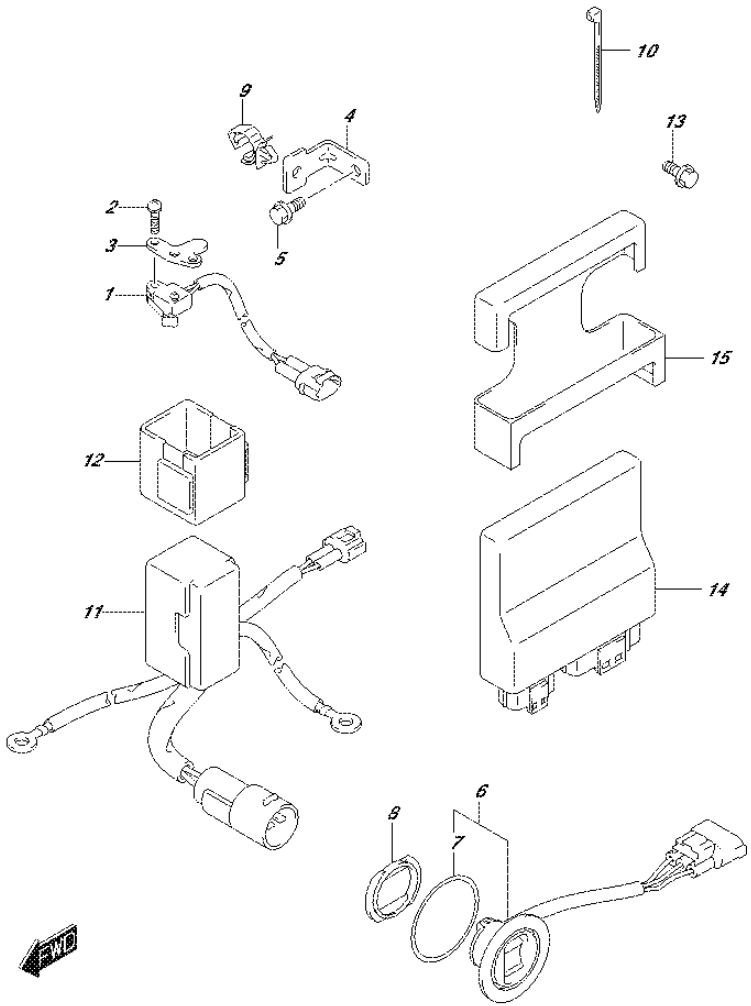

FIG.326E (1-L-3) PTT SWITCH/ENGINE CONTROL UNIT (DF80A E01)

REF NO.	PART NO.	DESCRIPTION	Q'TY	REMARKS
1	37721-93J00	SWITCH ASSY, NEUTRAL	1	
2	09137-04004	SCREW (4X16)	2	
3	37726-90J10	BRACKET, NEUTRAL SWITCH	1	
4	37726-87L00	BRACKET, SWITCH LEAD CLAMP	1	
5	01550-06127	BOLT	1	
6	37850-92J00	SWITCH ASSY, PTT	1	
7	37856-92J00	.TAPE, PTT SWITCH	1	
8	37857-92J00	BUSH, PTT SWITCH	1	
9	09403-11321	CLAMP	1	
10	09407-10404	CLAMP (L:100)	1	
11	38410-93J12	RELAY ASSY, PTT	1	
12	38415-93J00	HOLDER, PTT RELAY	1	
13	01550-06127	BOLT	1	
14	33930-87LC0	UNIT, ENGINE CONTROL	1	
15	33925-92J00	CUSHION, ENGINE CONTROL UNIT	1	

FIG.326F

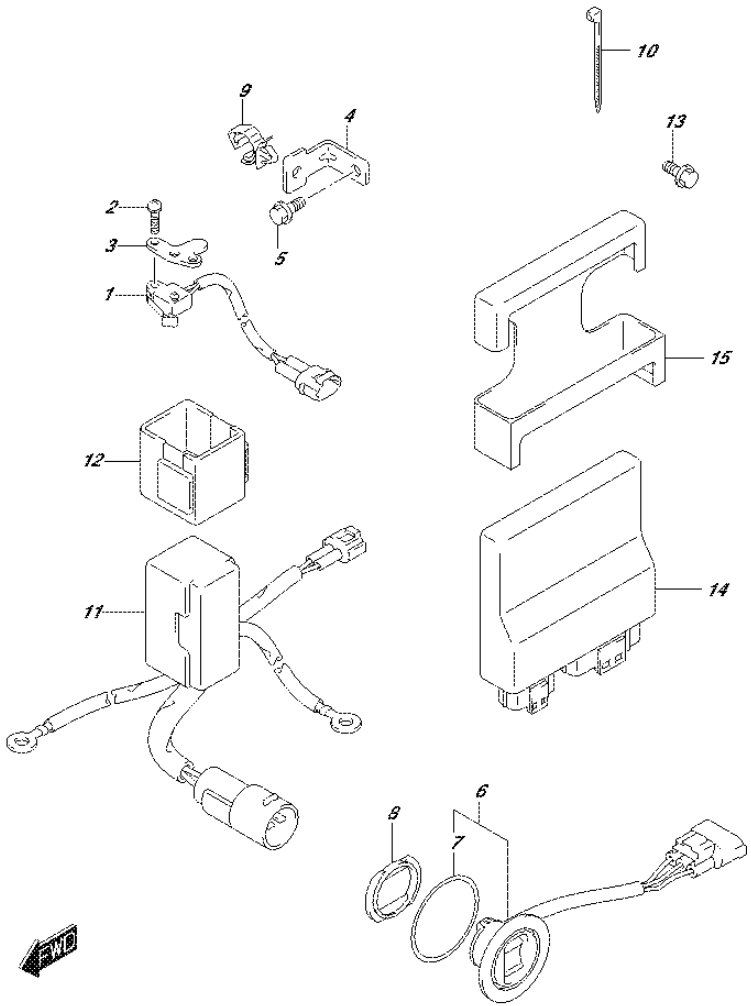

FIG.326F (1-L-4) PTT SWITCH/ENGINE CONTROL UNIT (DF80A E40)

REF NO.	PART NO.	DESCRIPTION	Q'TY	REMARKS
1	37721-93J00	SWITCH ASSY, NEUTRAL	1	
2	09137-04004	SCREW (4X16)	2	
3	37726-90J10	BRACKET, NEUTRAL SWITCH	1	
4	37726-87L00	BRACKET, SWITCH LEAD CLAMP	1	
5	01550-06127	BOLT	1	
6	37850-92J00	SWITCH ASSY, PTT	1	
7	37856-92J00	.TAPE, PTT SWITCH	1	
8	37857-92J00	BUSH, PTT SWITCH	1	
9	09403-11321	CLAMP	1	
10	09407-10404	CLAMP (L:100)	1	
11	38410-93J12	RELAY ASSY, PTT	1	
12	38415-93J00	HOLDER, PTT RELAY	1	
13	01550-06127	BOLT	1	
14	33930-87LD0	UNIT, ENGINE CONTROL	1	
15	33925-92J00	CUSHION, ENGINE CONTROL UNIT	1	

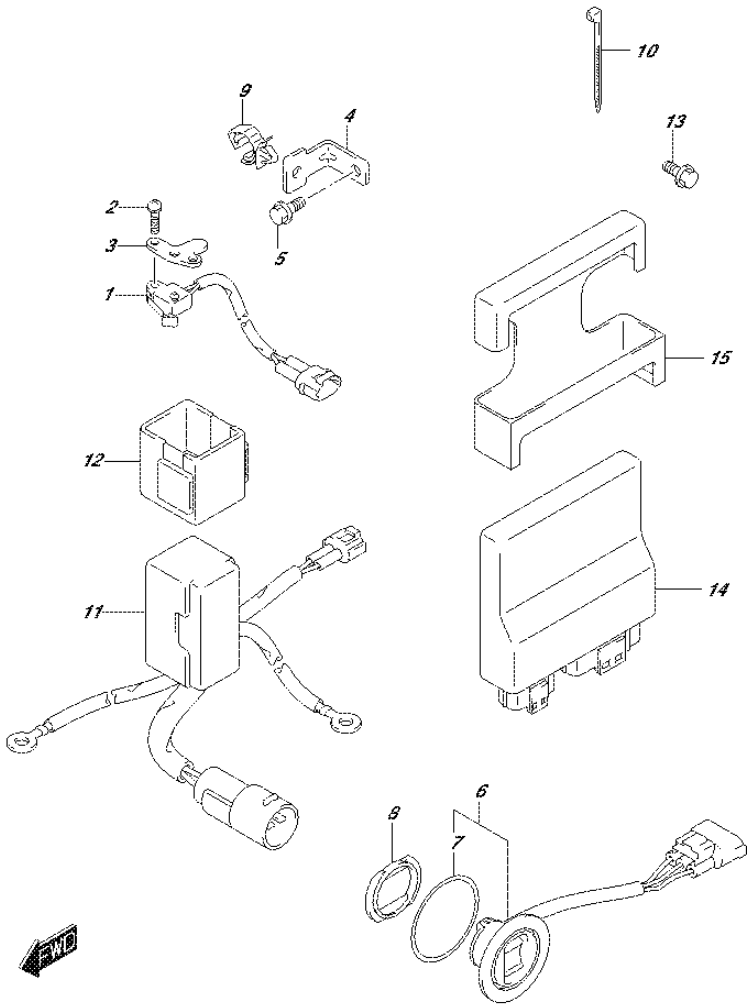

FIG.326G (1-L-5) PTT SWITCH/ENGINE CONTROL UNIT (DF90A E01)

REF NO.	PART NO.	DESCRIPTION	Q'TY	REMARKS
1	37721-93J00	SWITCH ASSY, NEUTRAL	1	
2	09137-04004	SCREW (4X16)	2	
3	37726-90J10	BRACKET, NEUTRAL SWITCH	1	
4	37726-87L00	BRACKET, SWITCH LEAD CLAMP	1	
5	01550-06127	BOLT	1	
6	37850-92J00	SWITCH ASSY, PTT	1	
7	37856-92J00	.TAPE, PTT SWITCH	1	
8	37857-92J00	BUSH, PTT SWITCH	1	
9	09403-11321	CLAMP	1	
10	09407-10404	CLAMP (L:100)	1	
11	38410-93J12	RELAY ASSY, PTT	1	
12	38415-93J00	HOLDER, PTT RELAY	1	
13	01550-06127	BOLT	1	
14	33930-87LE0	UNIT, ENGINE CONTROL	1	
15	33925-92J00	CUSHION, ENGINE CONTROL UNIT	1	

FIG.326H

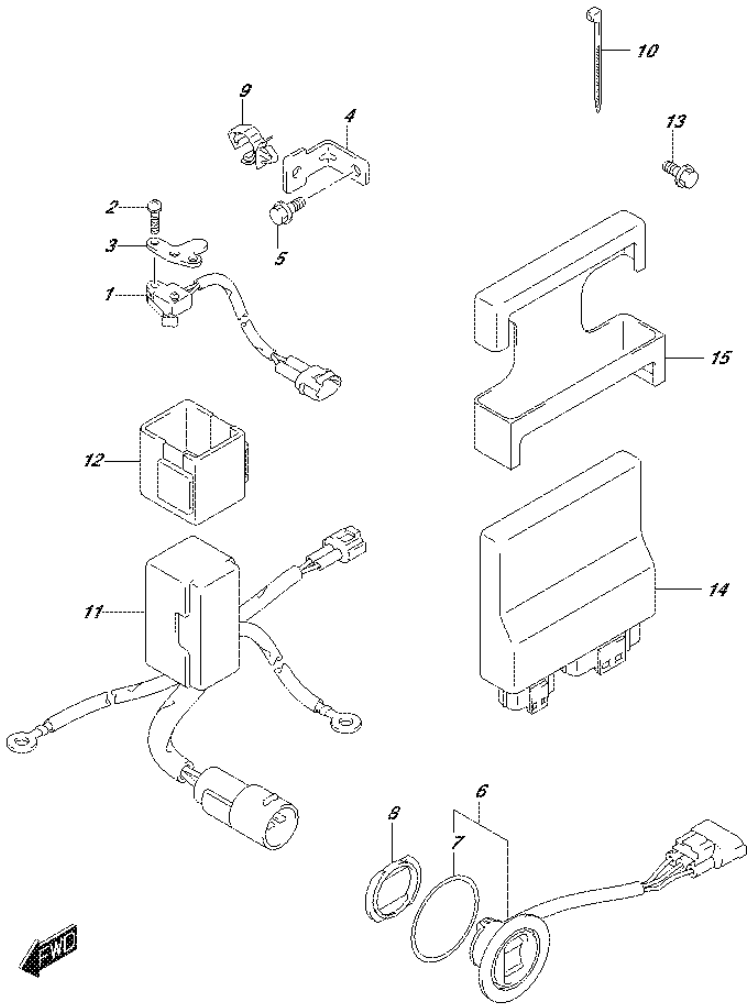

FIG.326H (1-L-6) PTT SWITCH/ENGINE CONTROL UNIT (DF90A E40)

REF NO.	PART NO.	DESCRIPTION	Q'TY	REMARKS
1	37721-93J00	SWITCH ASSY, NEUTRAL	1	
2	09137-04004	SCREW (4X16)	2	
3	37726-90J10	BRACKET, NEUTRAL SWITCH	1	
4	37726-87L00	BRACKET, SWITCH LEAD CLAMP	1	
5	01550-06127	BOLT	1	
6	37850-92J00	SWITCH ASSY, PTT	1	
7	37856-92J00	.TAPE, PTT SWITCH	1	
8	37857-92J00	BUSH, PTT SWITCH	1	
9	09403-11321	CLAMP	1	
10	09407-10404	CLAMP (L:100)	1	
11	38410-93J12	RELAY ASSY, PTT	1	
12	38415-93J00	HOLDER, PTT RELAY	1	
13	01550-06127	BOLT	1	
14	33930-87LF0	UNIT, ENGINE CONTROL	1	
15	33925-92J00	CUSHION, ENGINE CONTROL UNIT	1	

FIG.326J

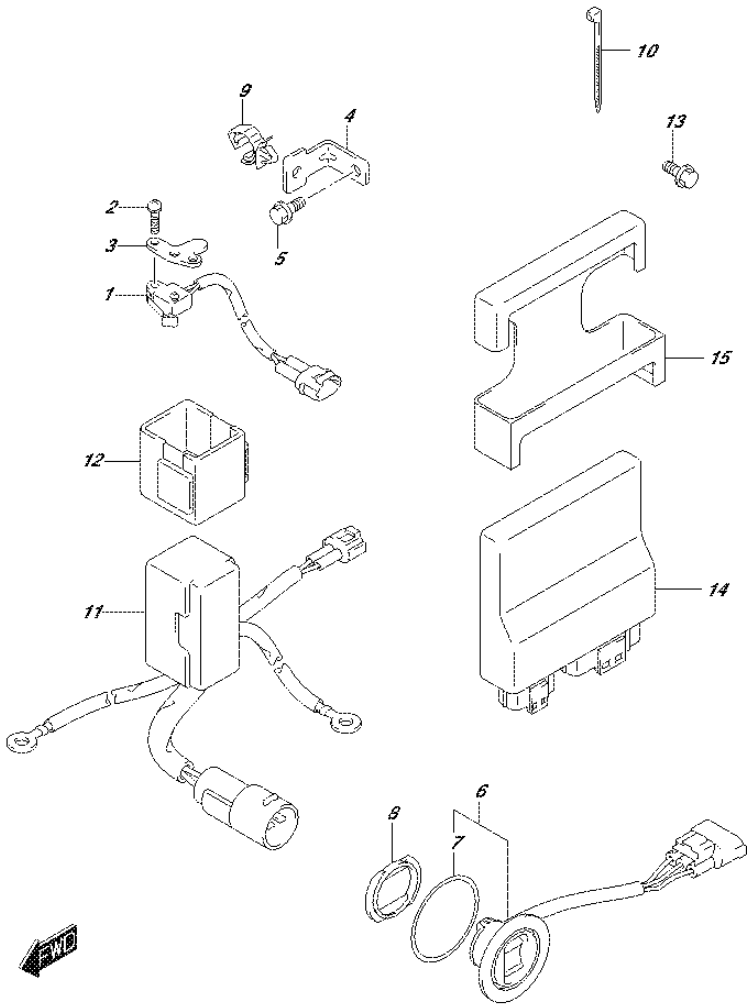

FIG.326J (1-L-7) PTT SWITCH/ENGINE CONTROL UNIT (DF90ATH E01)

REF NO.	PART NO.	DESCRIPTION	Q'TY	REMARKS
1	37721-93J00	SWITCH ASSY, NEUTRAL	1	
2	09137-04004	SCREW (4X16)	2	
3	37726-90J10	BRACKET, NEUTRAL SWITCH	1	
4	37726-87L00	BRACKET, SWITCH LEAD CLAMP	1	
5	01550-06127	BOLT	1	
6	37850-92J00	SWITCH ASSY, PTT	1	
7	37856-92J00	.TAPE, PTT SWITCH	1	
8	37857-92J00	BUSH, PTT SWITCH	1	
9	09403-11321	CLAMP	1	
10	09407-10404	CLAMP (L:100)	1	
11	38410-93J12	RELAY ASSY, PTT	1	
12	38415-93J00	HOLDER, PTT RELAY	1	
13	01550-06127	BOLT	1	
14	33930-87LE0	UNIT, ENGINE CONTROL	1	
15	33925-92J00	CUSHION, ENGINE CONTROL UNIT	1	

FIG.326K

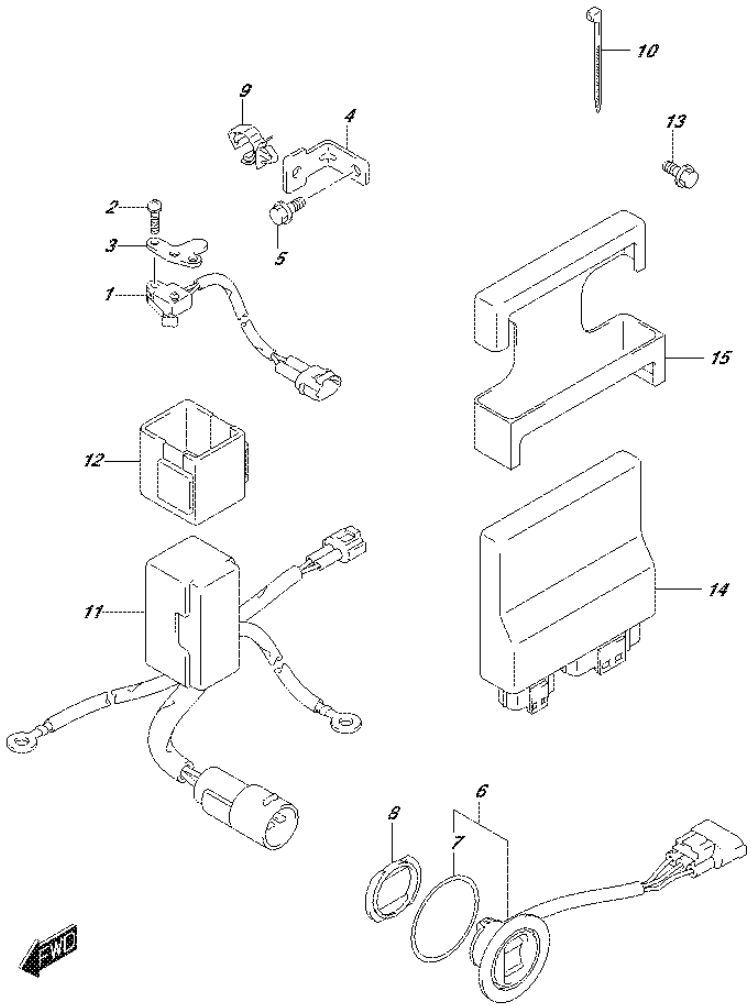

FIG.326K (1-L-8) PTT SWITCH/ENGINE CONTROL UNIT (DF90ATH E40)

REF NO.	PART NO.	DESCRIPTION	Q'TY	REMARKS
1	37721-93J00	SWITCH ASSY, NEUTRAL	1	
2	09137-04004	SCREW (4X16)	2	
3	37726-90J10	BRACKET, NEUTRAL SWITCH	1	
4	37726-87L00	BRACKET, SWITCH LEAD CLAMP	1	
5	01550-06127	BOLT	1	
6	37850-92J00	SWITCH ASSY, PTT	1	
7	37856-92J00	.TAPE, PTT SWITCH	1	
8	37857-92J00	BUSH, PTT SWITCH	1	
9	09403-11321	CLAMP	1	
10	09407-10404	CLAMP (L:100)	1	
11	38410-93J12	RELAY ASSY, PTT	1	
12	38415-93J00	HOLDER, PTT RELAY	1	
13	01550-06127	BOLT	1	
14	33930-87LF0	UNIT, ENGINE CONTROL	1	
15	33925-92J00	CUSHION, ENGINE CONTROL UNIT	1	

FIG.335A

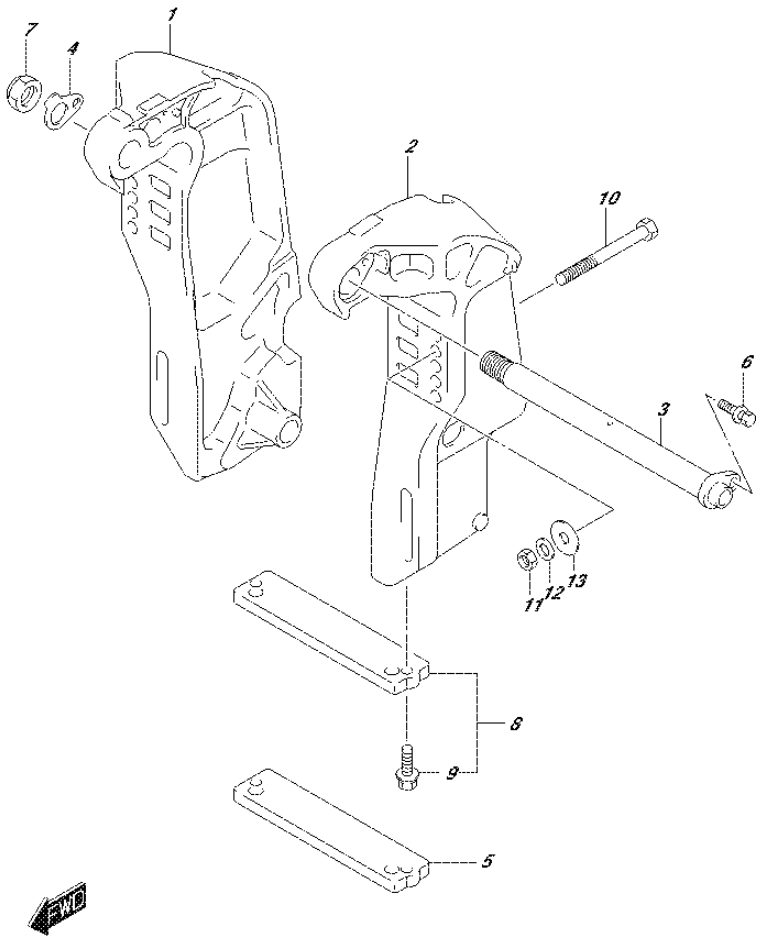

FIG.335A (1-L-9) CLAMP BRACKET (DF70A E01)

REF NO.	PART NO.	DESCRIPTION	Q'TY	REMARKS
1-1	41111-87L10-0EP	BRACKET, CLAMP STBD (BLACK)	1	
1-2	41111-87L10-Y5S	BRACKET, CLAMP STBD (WHITE)	1	
2-1	41121-87L10-0EP	BRACKET, CLAMP PORT (BLACK)	1	
2-2	41121-87L10-Y5S	BRACKET, CLAMP PORT (WHITE)	1	
3	41130-87L11	SHAFT, CLAMP BRACKET	1	
4	41135-93J11	WASHER, CLAMP BRACKET SHAFT	1	
5	55321-94910	ANODE (MAGNESIUM)	1	OPT
6	09116-08137	BOLT (8X22)	1	
7	09159-22006	NUT	1	
8	55320-94900	ANODE SET, CLAMP BRACKET	1	
9	09116-06121	.BOLT (6X25)	2	
10-1	09100-12091	BOLT (12X115)	4	
10-2	09100-12090	BOLT (12X150)	1	OPT
11	09159-12014	NUT	4	
12	09160-12110	WASHER (12.5X22X3)	4	
13	09160-12044	WASHER (12.5X35X3.2)	4	

FIG.335B

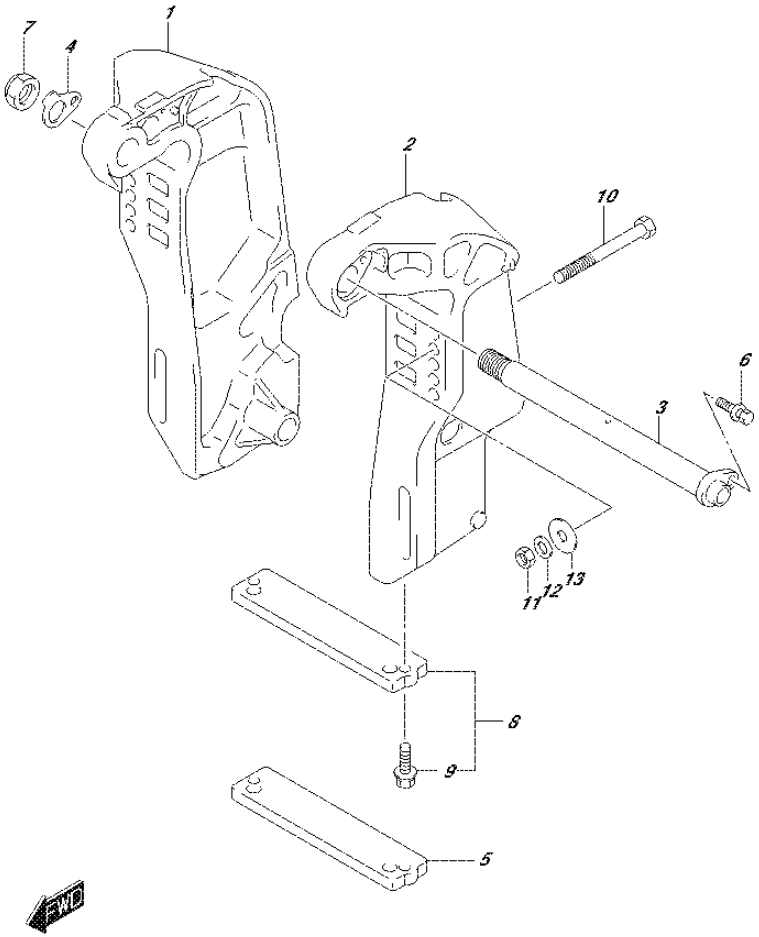

FIG.335B (1-L-10) CLAMP BRACKET (DF70A E40)

REF NO.	PART NO.	DESCRIPTION	Q'TY	REMARKS
1-1	41111-87L10-0EP	BRACKET, CLAMP STBD (BLACK)	1	
1-2	41111-87L10-Y5S	BRACKET, CLAMP STBD (WHITE)	1	
2-1	41121-87L10-0EP	BRACKET, CLAMP PORT (BLACK)	1	
2-2	41121-87L10-Y5S	BRACKET, CLAMP PORT (WHITE)	1	
3	41130-87L11	SHAFT, CLAMP BRACKET	1	
4	41135-93J11	WASHER, CLAMP BRACKET SHAFT	1	
5	55321-94910	ANODE (MAGNESIUM)	1	OPT
6	09116-08137	BOLT (8X22)	1	
7	09159-22006	NUT	1	
8	55320-94900	ANODE SET, CLAMP BRACKET	1	
9	09116-06121	.BOLT (6X25)	2	
10-1	09100-12091	BOLT (12X115)	4	
10-2	09100-12090	BOLT (12X150)	1	OPT
11	09159-12014	NUT	4	
12	09160-12110	WASHER (12.5X22X3)	4	
13	09160-12044	WASHER (12.5X35X3.2)	4	

FIG.335C

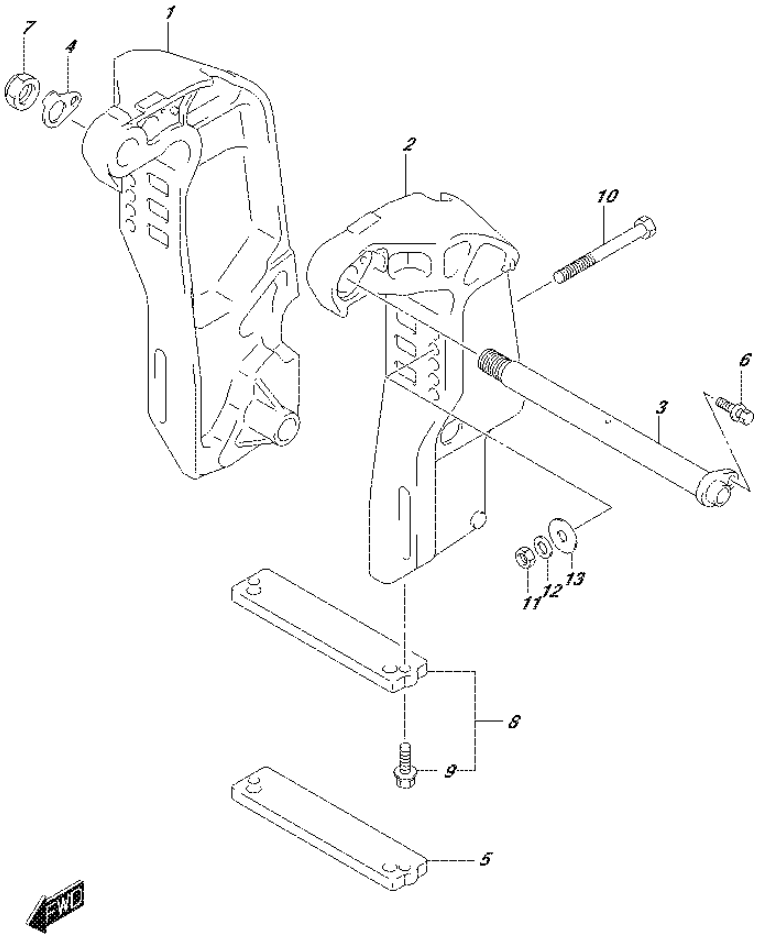

FIG.335C (1-L-11) CLAMP BRACKET (DF70ATH E01)

REF NO.	PART NO.	DESCRIPTION	Q'TY	REMARKS
1	41111-87L10-0EP	BRACKET, CLAMP STBD (BLACK)	1	
2	41121-87L10-0EP	BRACKET, CLAMP PORT (BLACK)	1	
3	41130-87L11	SHAFT, CLAMP BRACKET	1	
4	41135-93J11	WASHER, CLAMP BRACKET SHAFT	1	
5	55321-94910	ANODE (MAGNESIUM)	1	OPT
6	09116-08137	BOLT (8X22)	1	
7	09159-22006	NUT	1	
8	55320-94900	ANODE SET, CLAMP BRACKET	1	
9	09116-06121	.BOLT (6X25)	2	
10-1	09100-12091	BOLT (12X115)	4	
10-2	09100-12090	BOLT (12X150)	1	OPT
11	09159-12014	NUT	4	
12	09160-12110	WASHER (12.5X22X3)	4	
13	09160-12044	WASHER (12.5X35X3.2)	4	

FIG.335D

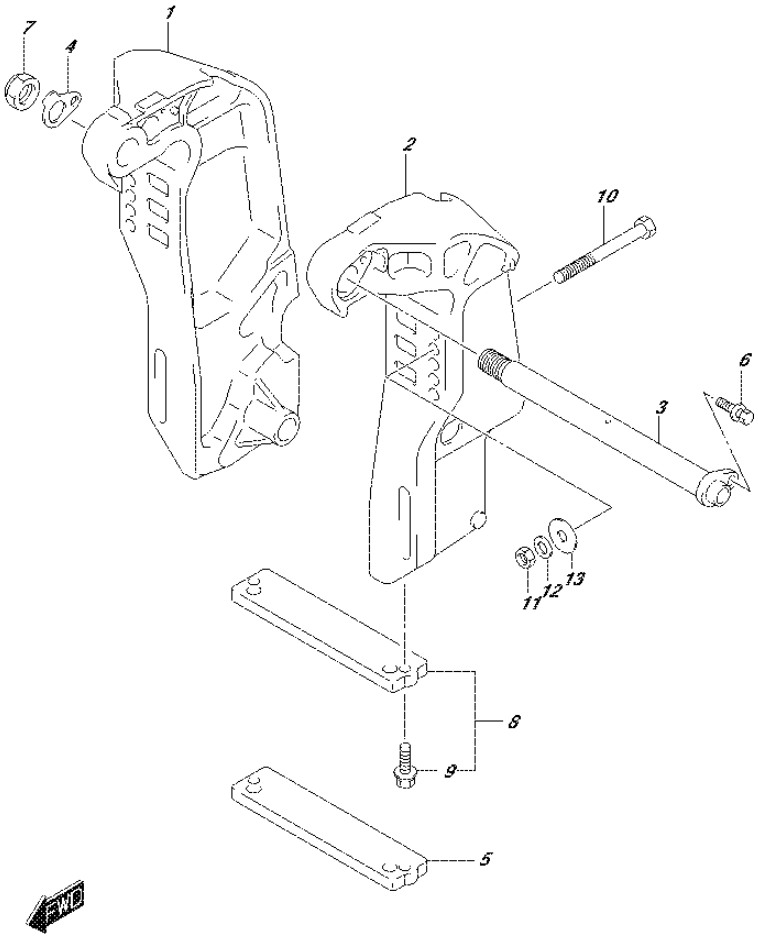

FIG.335D (1-L-12) CLAMP BRACKET (DF70ATH E40)

REF NO.	PART NO.	DESCRIPTION	Q'TY	REMARKS
1	41111-87L10-0EP	BRACKET, CLAMP STBD (BLACK)	1	
2	41121-87L10-0EP	BRACKET, CLAMP PORT (BLACK)	1	
3	41130-87L11	SHAFT, CLAMP BRACKET	1	
4	41135-93J11	WASHER, CLAMP BRACKET SHAFT	1	
5	55321-94910	ANODE (MAGNESIUM)	1	OPT
6	09116-08137	BOLT (8X22)	1	
7	09159-22006	NUT	1	
8	55320-94900	ANODE SET, CLAMP BRACKET	1	
9	09116-06121	.BOLT (6X25)	2	
10-1	09100-12091	BOLT (12X115)	4	
10-2	09100-12090	BOLT (12X150)	1	OPT
11	09159-12014	NUT	4	
12	09160-12110	WASHER (12.5X22X3)	4	
13	09160-12044	WASHER (12.5X35X3.2)	4	

FIG.335E

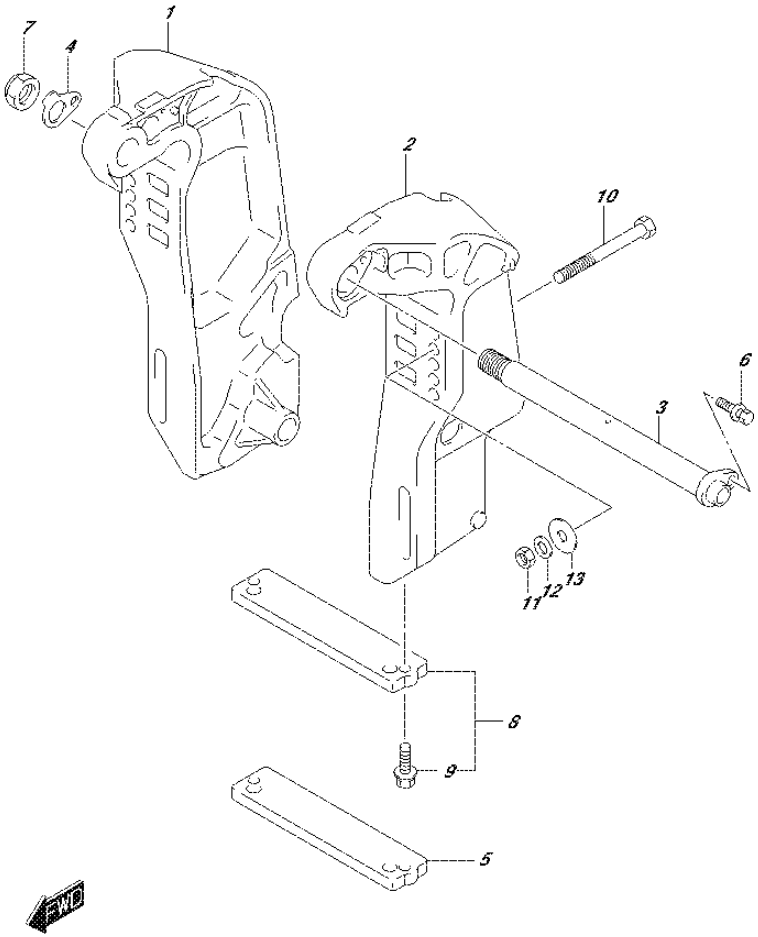

FIG.335E (1-L-13) CLAMP BRACKET (DF80A E01)

REF NO.	PART NO.	DESCRIPTION	Q'TY	REMARKS
1	41111-87L10-0EP	BRACKET, CLAMP STBD (BLACK)	1	
2	41121-87L10-0EP	BRACKET, CLAMP PORT (BLACK)	1	
3	41130-87L11	SHAFT, CLAMP BRACKET	1	
4	41135-93J11	WASHER, CLAMP BRACKET SHAFT	1	
5	55321-94910	ANODE (MAGNESIUM)	1	OPT
6	09116-08137	BOLT (8X22)	1	
7	09159-22006	NUT	1	
8	55320-94900	ANODE SET, CLAMP BRACKET	1	
9	09116-06121	.BOLT (6X25)	2	
10-1	09100-12091	BOLT (12X115)	4	
10-2	09100-12090	BOLT (12X150)	1	OPT
11	09159-12014	NUT	4	
12	09160-12110	WASHER (12.5X22X3)	4	
13	09160-12044	WASHER (12.5X35X3.2)	4	

FIG.335F

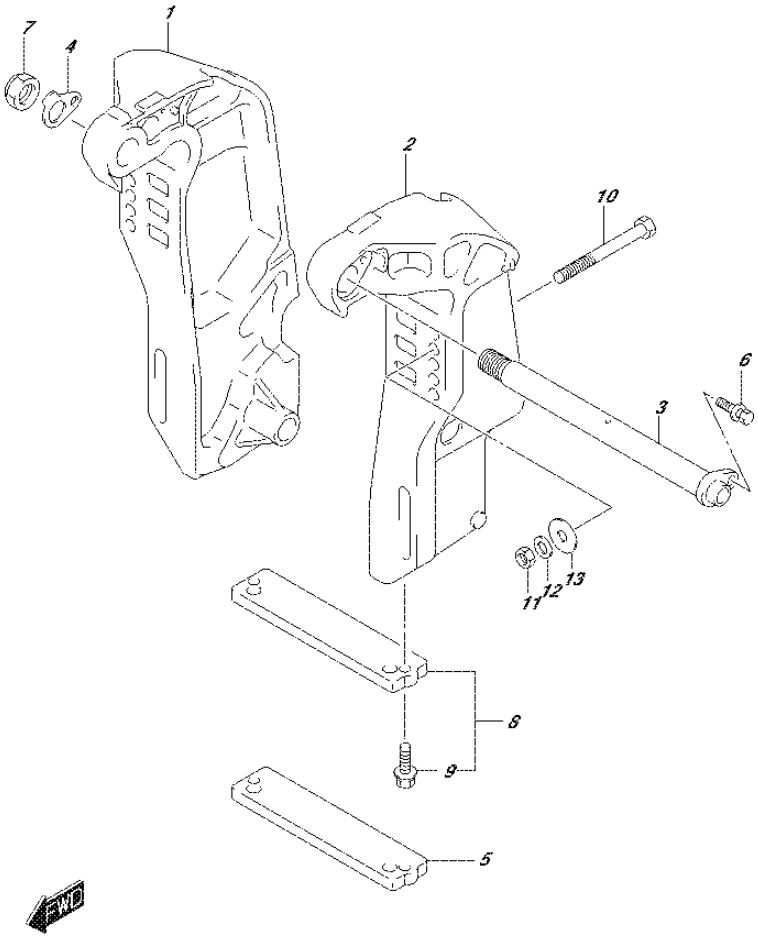

FIG.335F (1-L-14) CLAMP BRACKET (DF80A E40)

REF NO.	PART NO.	DESCRIPTION	Q'TY	REMARKS
1	41111-87L10-0EP	BRACKET, CLAMP STBD (BLACK)	1	
2	41121-87L10-0EP	BRACKET, CLAMP PORT (BLACK)	1	
3	41130-87L11	SHAFT, CLAMP BRACKET	1	
4	41135-93J11	WASHER, CLAMP BRACKET SHAFT	1	
5	55321-94910	ANODE (MAGNESIUM)	1	OPT
6	09116-08137	BOLT (8X22)	1	
7	09159-22006	NUT	1	
8	55320-94900	ANODE SET, CLAMP BRACKET	1	
9	09116-06121	.BOLT (6X25)	2	
10-1	09100-12091	BOLT (12X115)	4	
10-2	09100-12090	BOLT (12X150)	1	OPT
11	09159-12014	NUT	4	
12	09160-12110	WASHER (12.5X22X3)	4	
13	09160-12044	WASHER (12.5X35X3.2)	4	

FIG.335G

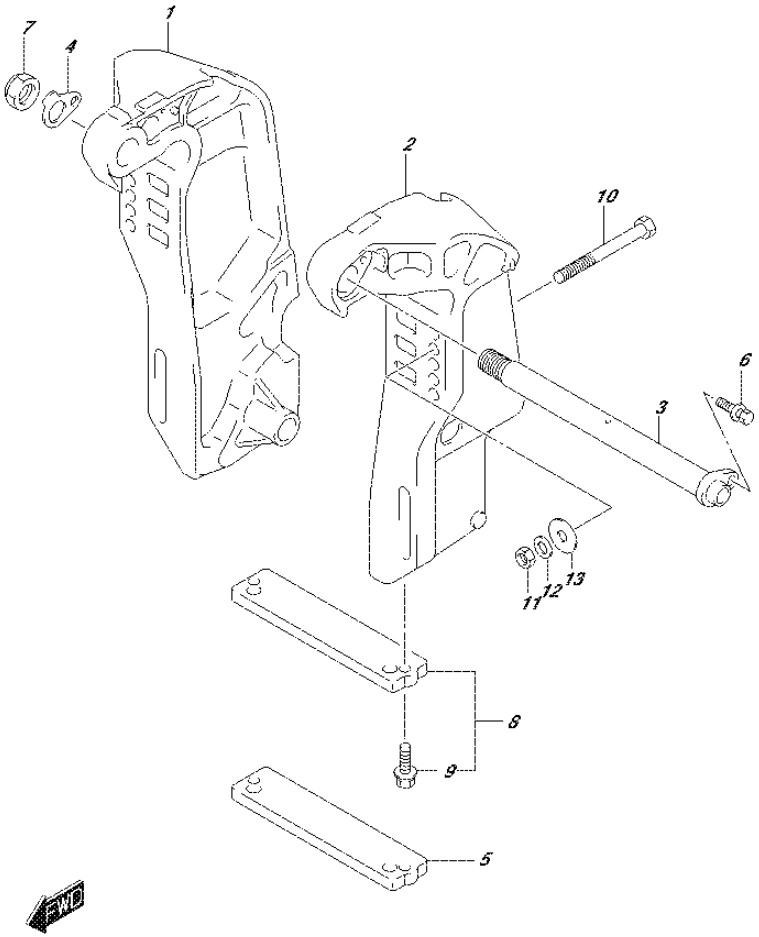

FIG.335G (1-L-15) CLAMP BRACKET (DF90A E01)

REF NO.	PART NO.	DESCRIPTION	Q'TY	REMARKS
1-1	41111-87L10-0EP	BRACKET, CLAMP STBD (BLACK)	1	
1-2	41111-87L10-Y5S	BRACKET, CLAMP STBD (WHITE)	1	
2-1	41121-87L10-0EP	BRACKET, CLAMP PORT (BLACK)	1	
2-2	41121-87L10-Y5S	BRACKET, CLAMP PORT (WHITE)	1	
3	41130-87L11	SHAFT, CLAMP BRACKET	1	
4	41135-93J11	WASHER, CLAMP BRACKET SHAFT	1	
5	55321-94910	ANODE (MAGNESIUM)	1	OPT
6	09116-08137	BOLT (8X22)	1	
7	09159-22006	NUT	1	
8	55320-94900	ANODE SET, CLAMP BRACKET	1	
9	09116-06121	.BOLT (6X25)	2	
10-1	09100-12091	BOLT (12X115)	4	
10-2	09100-12090	BOLT (12X150)	1	OPT
11	09159-12014	NUT	4	
12	09160-12110	WASHER (12.5X22X3)	4	
13	09160-12044	WASHER (12.5X35X3.2)	4	

FIG.335H

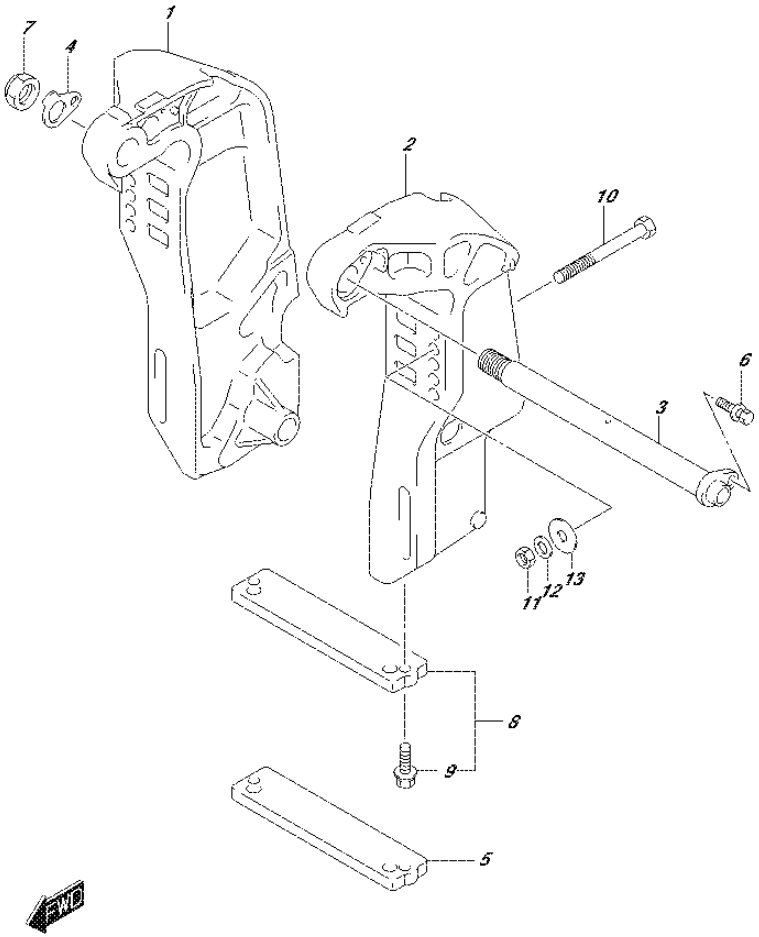

FIG.335H (2-B-2) CLAMP BRACKET (DF90A E40)

REF NO.	PART NO.	DESCRIPTION	Q'TY	REMARKS
1-1	41111-87L10-0EP	BRACKET, CLAMP STBD (BLACK)	1	
1-2	41111-87L10-Y5S	BRACKET, CLAMP STBD (WHITE)	1	
2-1	41121-87L10-0EP	BRACKET, CLAMP PORT (BLACK)	1	
2-2	41121-87L10-Y5S	BRACKET, CLAMP PORT (WHITE)	1	
3	41130-87L11	SHAFT, CLAMP BRACKET	1	
4	41135-93J11	WASHER, CLAMP BRACKET SHAFT	1	
5	55321-94910	ANODE (MAGNESIUM)	1	OPT
6	09116-08137	BOLT (8X22)	1	
7	09159-22006	NUT	1	
8	55320-94900	ANODE SET, CLAMP BRACKET	1	
9	09116-06121	.BOLT (6X25)	2	
10-1	09100-12091	BOLT (12X115)	4	
10-2	09100-12090	BOLT (12X150)	1	OPT
11	09159-12014	NUT	4	
12	09160-12110	WASHER (12.5X22X3)	4	
13	09160-12044	WASHER (12.5X35X3.2)	4	

FIG.335J

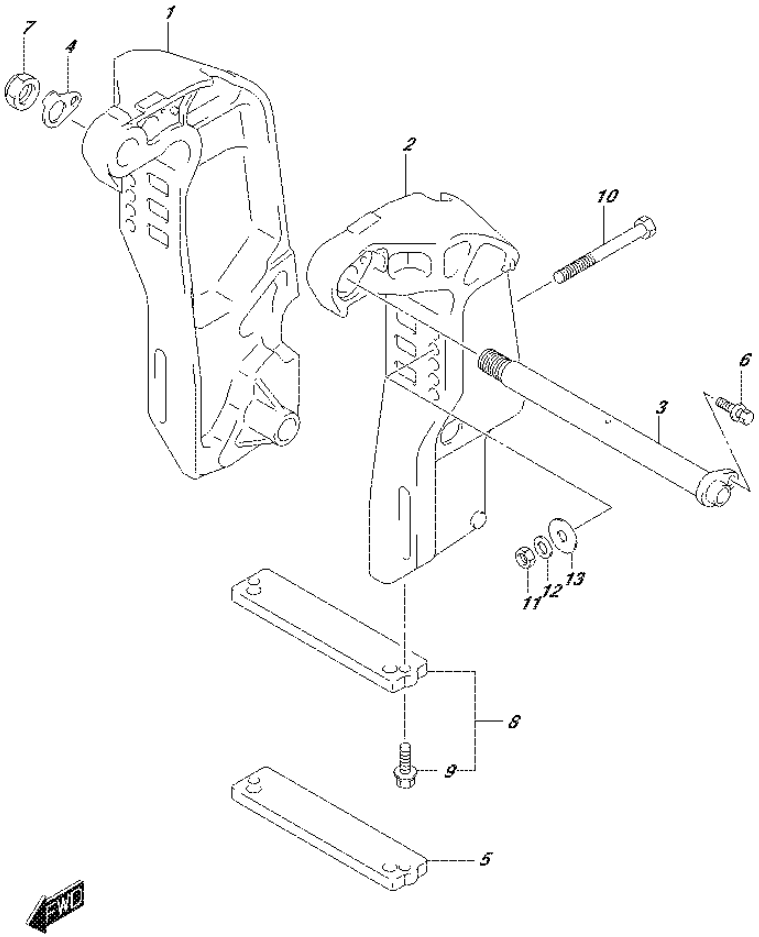

FIG.335J (2-B-3) CLAMP BRACKET (DF90ATH E01)

REF NO.	PART NO.	DESCRIPTION	Q'TY	REMARKS
1	41111-87L10-0EP	BRACKET, CLAMP STBD (BLACK)	1	
2	41121-87L10-0EP	BRACKET, CLAMP PORT (BLACK)	1	
3	41130-87L11	SHAFT, CLAMP BRACKET	1	
4	41135-93J11	WASHER, CLAMP BRACKET SHAFT	1	
5	55321-94910	ANODE (MAGNESIUM)	1	OPT
6	09116-08137	BOLT (8X22)	1	
7	09159-22006	NUT	1	
8	55320-94900	ANODE SET, CLAMP BRACKET	1	
9	09116-06121	.BOLT (6X25)	2	
10-1	09100-12091	BOLT (12X115)	4	
10-2	09100-12090	BOLT (12X150)	1	OPT
11	09159-12014	NUT	4	
12	09160-12110	WASHER (12.5X22X3)	4	
13	09160-12044	WASHER (12.5X35X3.2)	4	

FIG.335K

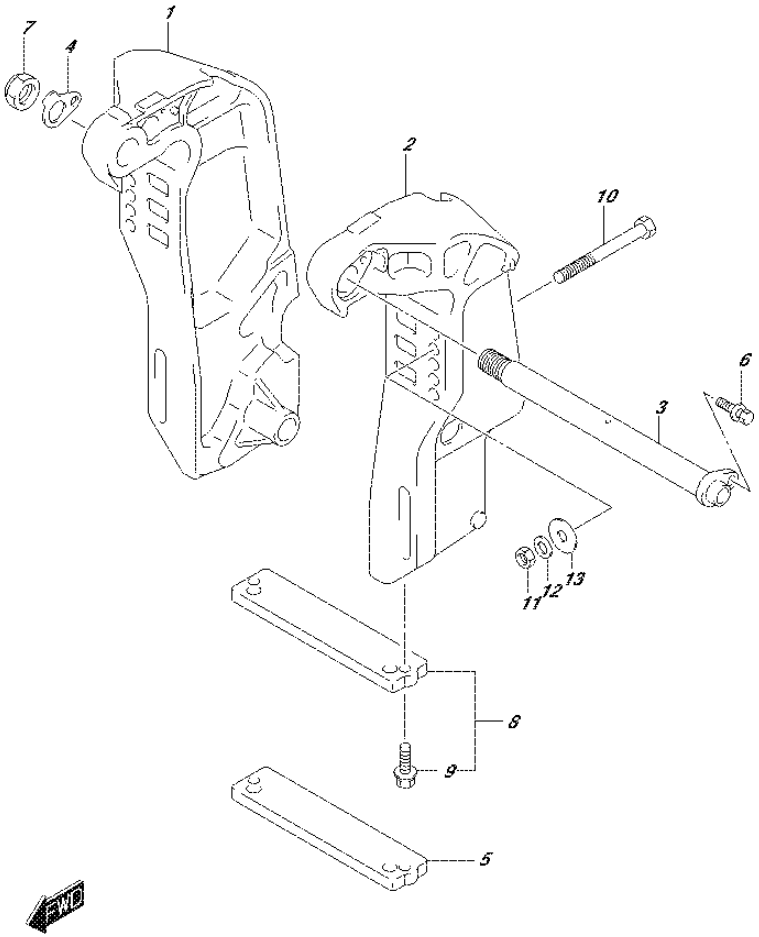

FIG.335K (2-B-4) CLAMP BRACKET (DF90ATH E40)

REF NO.	PART NO.	DESCRIPTION	Q'TY	REMARKS
1	41111-87L10-0EP	BRACKET, CLAMP STBD (BLACK)	1	
2	41121-87L10-0EP	BRACKET, CLAMP PORT (BLACK)	1	
3	41130-87L11	SHAFT, CLAMP BRACKET	1	
4	41135-93J11	WASHER, CLAMP BRACKET SHAFT	1	
5	55321-94910	ANODE (MAGNESIUM)	1	OPT
6	09116-08137	BOLT (8X22)	1	
7	09159-22006	NUT	1	
8	55320-94900	ANODE SET, CLAMP BRACKET	1	
9	09116-06121	.BOLT (6X25)	2	
10-1	09100-12091	BOLT (12X115)	4	
10-2	09100-12090	BOLT (12X150)	1	OPT
11	09159-12014	NUT	4	
12	09160-12110	WASHER (12.5X22X3)	4	
13	09160-12044	WASHER (12.5X35X3.2)	4	

FIG.336A

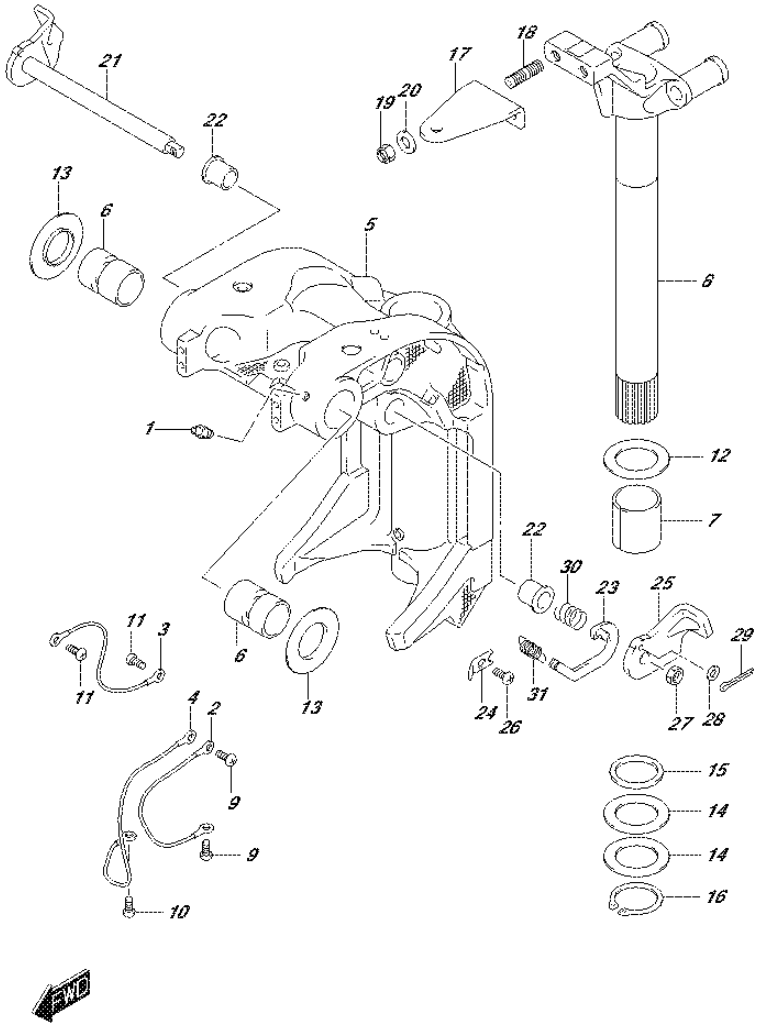

FIG.336A (2-B-5) SWIVEL BRACKET (DF70A E01)

REF NO.	PART NO.	DESCRIPTION	Q'TY	REMARKS
1	22511-99011	NIPPLE, GREASE	5	
2	36894-87D00	LEAD (SWIVEL TO MOUNT BRKT)	1	L:165
3	36894-87D00	LEAD (CLAMP TO SWIVEL)	1	L:165
4	36895-87D10	LEAD (SWIVEL TO HOUSING)	1	L:310
5-1	43111-87L20-0EP	BRACKET, SWIVEL (BLACK)	1	
5-2	43111-87L20-Y5S	BRACKET, SWIVEL (WHITE)	1	
6	43211-93J00	BUSH, CLAMP SHAFT SWIVEL	2	
7	43711-97E01	BUSH, STEERING	2	
8-1	43750-87L20-0EP	BRACKET, STEERING (BLACK)	1	
8-2	43750-87L20-Y5S	BRACKET, STEERING (WHITE)	1	
9	09125-06063	SCREW (6X10)	2	
10	09125-06063	SCREW (6X10)	1	
11	09125-06063	SCREW (6X10)	2	
12	09160-39001	WASHER (39.5X64X1)	2	
13	09169-28003	WASHER	2	
14	09181-39001	SHIM (39.5X64X0.3)	4	
15	09282-39001	OIL SEAL (39X51X5)	1	
16	09380-38003	CIRCLIP	1	
17	43755-87L00	ATTACHMENT, STEERING BRKT	1	
18	09108-10156	STUD BOLT	2	
19	09159-10050	NUT	2	
20	09160-10141	WASHER (10.5X19X2)	2	
21	41220-93J11	LEVER, TILT LOCK	1	
22	41224-95E01	BUSH, TILT STOPPER ROD	2	
23	41230-87L00	LINK, TILT LOCK LEVER	1	
24	41233-95E10	BRACKET, TILT LOCK SPRING	1	
25	41234-93J11	LEVER, TILT LOCK PORT	1	
26	09125-06063	SCREW (6X10)	1	
27	09140-10032	NUT	1	
28	09160-06082	WASHER (6.5X13X1.0)	1	
29	09204-01006	PIN	1	
30	09440-19028	SPRING	1	
31	09443-10043	SPRING	1	

FIG.336B

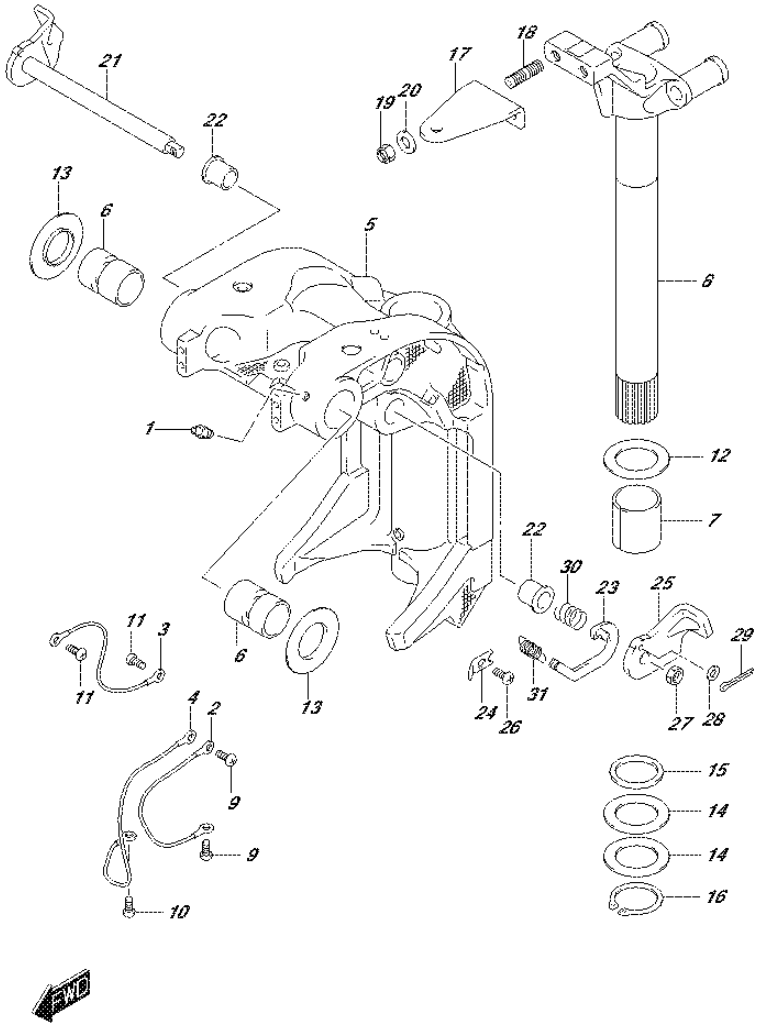

FIG.336B (2-B-6) SWIVEL BRACKET (DF70A E40)

REF NO.	PART NO.	DESCRIPTION	Q'TY	REMARKS
1	22511-99011	NIPPLE, GREASE	5	
2	36894-87D00	LEAD (SWIVEL TO MOUNT BRKT)	1	L:165
3	36894-87D00	LEAD (CLAMP TO SWIVEL)	1	L:165
4	36895-87D10	LEAD (SWIVEL TO HOUSING)	1	L:310
5-1	43111-87L20-0EP	BRACKET, SWIVEL (BLACK)	1	
5-2	43111-87L20-Y5S	BRACKET, SWIVEL (WHITE)	1	
6	43211-93J00	BUSH, CLAMP SHAFT SWIVEL	2	
7	43711-97E01	BUSH, STEERING	2	
8-1	43750-87L20-0EP	BRACKET, STEERING (BLACK)	1	
8-2	43750-87L20-Y5S	BRACKET, STEERING (WHITE)	1	
9	09125-06063	SCREW (6X10)	2	
10	09125-06063	SCREW (6X10)	1	
11	09125-06063	SCREW (6X10)	2	
12	09160-39001	WASHER (39.5X64X1)	2	
13	09169-28003	WASHER	2	
14	09181-39001	SHIM (39.5X64X0.3)	4	
15	09282-39001	OIL SEAL (39X51X5)	1	
16	09380-38003	CIRCLIP	1	
17	43755-87L00	ATTACHMENT, STEERING BRKT	1	
18	09108-10156	STUD BOLT	2	
19	09159-10050	NUT	2	
20	09160-10141	WASHER (10.5X19X2)	2	
21	41220-93J11	LEVER, TILT LOCK	1	
22	41224-95E01	BUSH, TILT STOPPER ROD	2	
23	41230-87L00	LINK, TILT LOCK LEVER	1	
24	41233-95E10	BRACKET, TILT LOCK SPRING	1	
25	41234-93J11	LEVER, TILT LOCK PORT	1	
26	09125-06063	SCREW (6X10)	1	
27	09140-10032	NUT	1	
28	09160-06082	WASHER (6.5X13X1.0)	1	
29	09204-01006	PIN	1	
30	09440-19028	SPRING	1	
31	09443-10043	SPRING	1	

FIG.336C

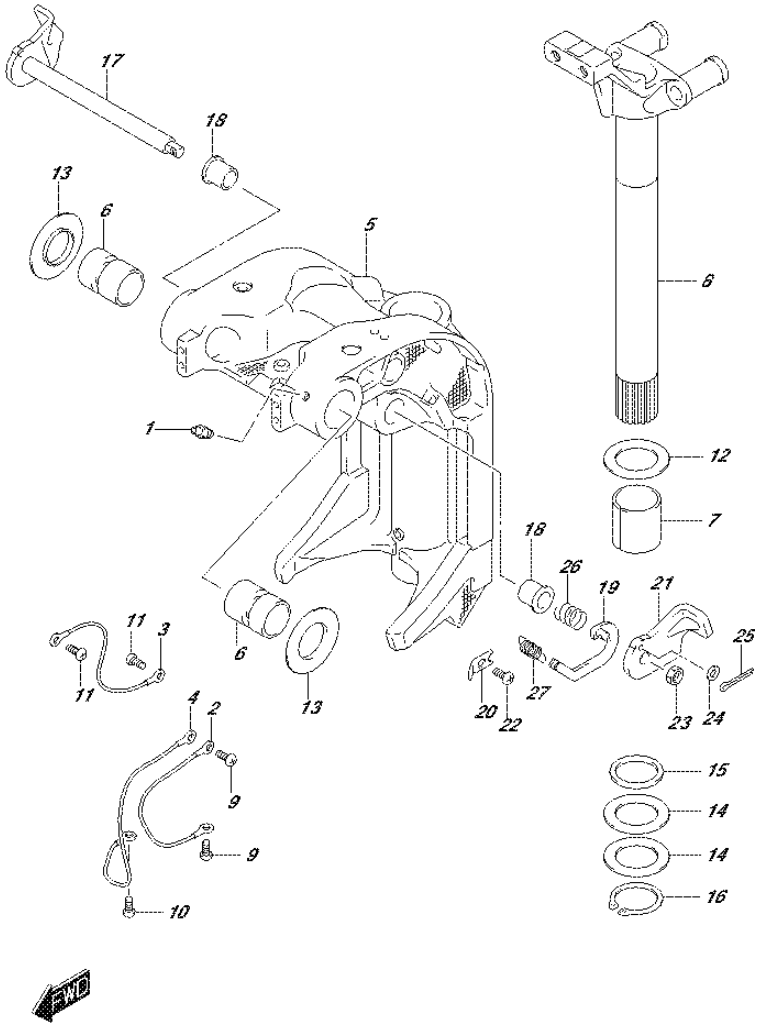

FIG.336C (2-B-7) SWIVEL BRACKET (DF70ATH E01)

REF NO.	PART NO.	DESCRIPTION	Q'TY	REMARKS
1	22511-99011	NIPPLE, GREASE	5	
2	36894-87D00	LEAD (SWIVEL TO MOUNT BRKT)	1	L:165
3	36894-87D00	LEAD (CLAMP TO SWIVEL)	1	L:165
4	36895-87D10	LEAD (SWIVEL TO HOUSING)	1	L:310
5	43111-87L20-0EP	BRACKET, SWIVEL (BLACK)	1	
6	43211-93J00	BUSH, CLAMP SHAFT SWIVEL	2	
7	43711-97E01	BUSH, STEERING	2	
8	43750-87L20-0EP	BRACKET, STEERING (BLACK)	1	
9	09125-06063	SCREW (6X10)	2	
10	09125-06063	SCREW (6X10)	1	
11	09125-06063	SCREW (6X10)	2	
12	09160-39001	WASHER (39.5X64X1)	2	
13	09169-28003	WASHER	2	
14	09181-39001	SHIM (39.5X64X0.3)	4	
15	09282-39001	OIL SEAL (39X51X5)	1	
16	09380-38003	CIRCLIP	1	
17	41220-93J11	LEVER, TILT LOCK	1	
18	41224-95E01	BUSH, TILT STOPPER ROD	2	
19	41230-87L00	LINK, TILT LOCK LEVER	1	
20	41233-95E10	BRACKET, TILT LOCK SPRING	1	
21	41234-93J11	LEVER, TILT LOCK PORT	1	
22	09125-06063	SCREW (6X10)	1	
23	09140-10032	NUT	1	
24	09160-06082	WASHER (6.5X13X1.0)	1	
25	09204-01006	PIN	1	
26	09440-19028	SPRING	1	
27	09443-10043	SPRING	1	

FIG.336D

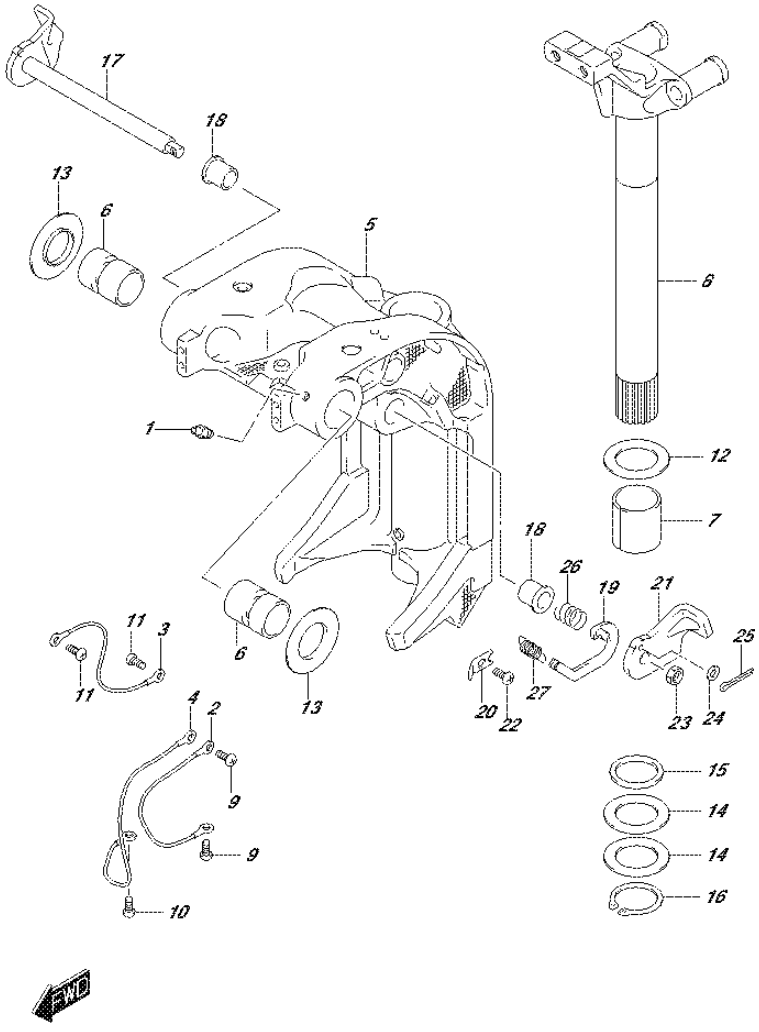

FIG.336D (2-B-8) SWIVEL BRACKET (DF70ATH E40)

REF NO.	PART NO.	DESCRIPTION	Q'TY	REMARKS
1	22511-99011	NIPPLE, GREASE	5	
2	36894-87D00	LEAD (SWIVEL TO MOUNT BRKT)	1	L:165
3	36894-87D00	LEAD (CLAMP TO SWIVEL)	1	L:165
4	36895-87D10	LEAD (SWIVEL TO HOUSING)	1	L:310
5	43111-87L20-0EP	BRACKET, SWIVEL (BLACK)	1	
6	43211-93J00	BUSH, CLAMP SHAFT SWIVEL	2	
7	43711-97E01	BUSH, STEERING	2	
8	43750-87L20-0EP	BRACKET, STEERING (BLACK)	1	
9	09125-06063	SCREW (6X10)	2	
10	09125-06063	SCREW (6X10)	1	
11	09125-06063	SCREW (6X10)	2	
12	09160-39001	WASHER (39.5X64X1)	2	
13	09169-28003	WASHER	2	
14	09181-39001	SHIM (39.5X64X0.3)	4	
15	09282-39001	OIL SEAL (39X51X5)	1	
16	09380-38003	CIRCLIP	1	
17	41220-93J11	LEVER, TILT LOCK	1	
18	41224-95E01	BUSH, TILT STOPPER ROD	2	
19	41230-87L00	LINK, TILT LOCK LEVER	1	
20	41233-95E10	BRACKET, TILT LOCK SPRING	1	
21	41234-93J11	LEVER, TILT LOCK PORT	1	
22	09125-06063	SCREW (6X10)	1	
23	09140-10032	NUT	1	
24	09160-06082	WASHER (6.5X13X1.0)	1	
25	09204-01006	PIN	1	
26	09440-19028	SPRING	1	
27	09443-10043	SPRING	1	

FIG.336E

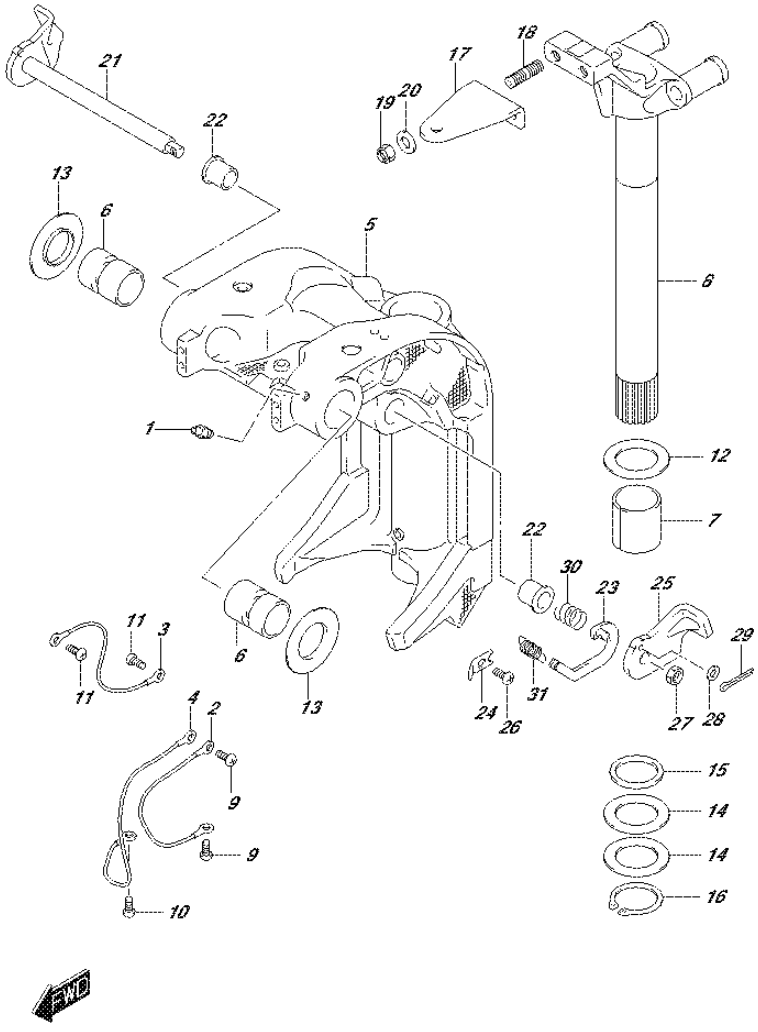

FIG.336E (2-B-9) SWIVEL BRACKET (DF80A E01)

REF NO.	PART NO.	DESCRIPTION	Q'TY	REMARKS
1	22511-99011	NIPPLE, GREASE	5	
2	36894-87D00	LEAD (SWIVEL TO MOUNT BRKT)	1	L:165
3	36894-87D00	LEAD (CLAMP TO SWIVEL)	1	L:165
4	36895-87D10	LEAD (SWIVEL TO HOUSING)	1	L:310
5	43111-87L20-0EP	BRACKET, SWIVEL (BLACK)	1	
6	43211-93J00	BUSH, CLAMP SHAFT SWIVEL	2	
7	43711-97E01	BUSH, STEERING	2	
8	43750-87L20-0EP	BRACKET, STEERING (BLACK)	1	
9	09125-06063	SCREW (6X10)	2	
10	09125-06063	SCREW (6X10)	1	
11	09125-06063	SCREW (6X10)	2	
12	09160-39001	WASHER (39.5X64X1)	2	
13	09169-28003	WASHER	2	
14	09181-39001	SHIM (39.5X64X0.3)	4	
15	09282-39001	OIL SEAL (39X51X5)	1	
16	09380-38003	CIRCLIP	1	
17	43755-87L00	ATTACHMENT, STEERING BRKT	1	
18	09108-10156	STUD BOLT	2	
19	09159-10050	NUT	2	
20	09160-10141	WASHER (10.5X19X2)	2	
21	41220-93J11	LEVER, TILT LOCK	1	
22	41224-95E01	BUSH, TILT STOPPER ROD	2	
23	41230-87L00	LINK, TILT LOCK LEVER	1	
24	41233-95E10	BRACKET, TILT LOCK SPRING	1	
25	41234-93J11	LEVER, TILT LOCK PORT	1	
26	09125-06063	SCREW (6X10)	1	
27	09140-10032	NUT	1	
28	09160-06082	WASHER (6.5X13X1.0)	1	
29	09204-01006	PIN	1	
30	09440-19028	SPRING	1	
31	09443-10043	SPRING	1	

FIG.336F

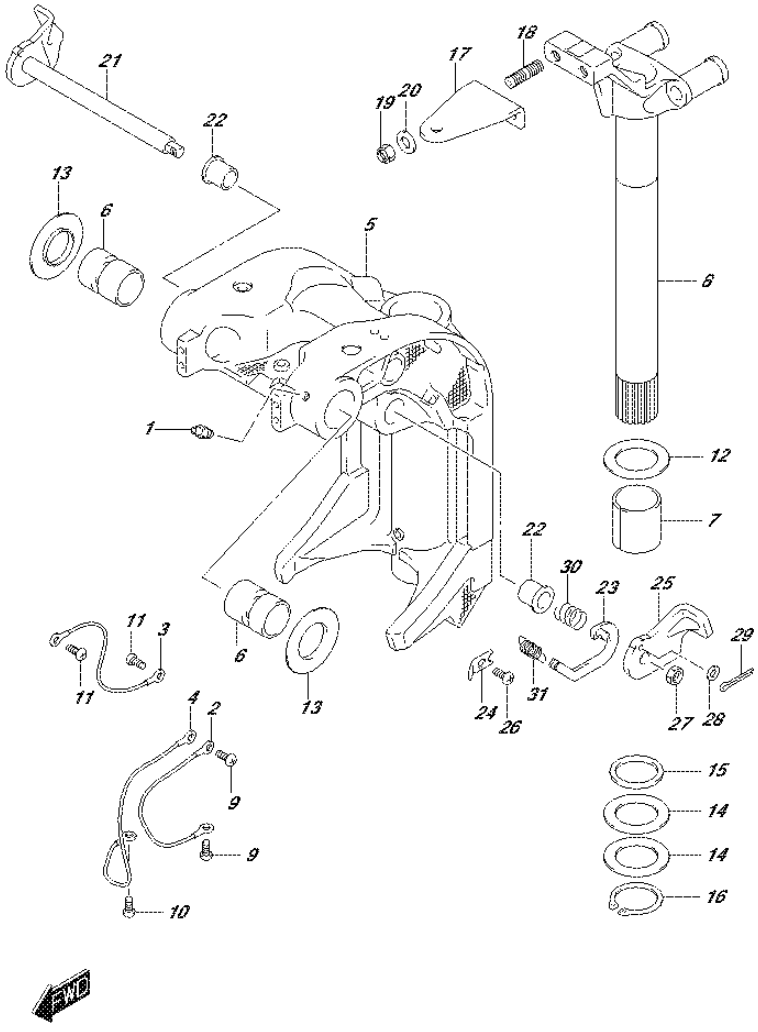

FIG.336F (2-B-10) SWIVEL BRACKET (DF80A E40)

REF NO.	PART NO.	DESCRIPTION	Q'TY	REMARKS
1	22511-99011	NIPPLE, GREASE	5	
2	36894-87D00	LEAD (SWIVEL TO MOUNT BRKT)	1	L:165
3	36894-87D00	LEAD (CLAMP TO SWIVEL)	1	L:165
4	36895-87D10	LEAD (SWIVEL TO HOUSING)	1	L:310
5	43111-87L20-0EP	BRACKET, SWIVEL (BLACK)	1	
6	43211-93J00	BUSH, CLAMP SHAFT SWIVEL	2	
7	43711-97E01	BUSH, STEERING	2	
8	43750-87L20-0EP	BRACKET, STEERING (BLACK)	1	
9	09125-06063	SCREW (6X10)	2	
10	09125-06063	SCREW (6X10)	1	
11	09125-06063	SCREW (6X10)	2	
12	09160-39001	WASHER (39.5X64X1)	2	
13	09169-28003	WASHER	2	
14	09181-39001	SHIM (39.5X64X0.3)	4	
15	09282-39001	OIL SEAL (39X51X5)	1	
16	09380-38003	CIRCLIP	1	
17	43755-87L00	ATTACHMENT, STEERING BRKT	1	
18	09108-10156	STUD BOLT	2	
19	09159-10050	NUT	2	
20	09160-10141	WASHER (10.5X19X2)	2	
21	41220-93J11	LEVER, TILT LOCK	1	
22	41224-95E01	BUSH, TILT STOPPER ROD	2	
23	41230-87L00	LINK, TILT LOCK LEVER	1	
24	41233-95E10	BRACKET, TILT LOCK SPRING	1	
25	41234-93J11	LEVER, TILT LOCK PORT	1	
26	09125-06063	SCREW (6X10)	1	
27	09140-10032	NUT	1	
28	09160-06082	WASHER (6.5X13X1.0)	1	
29	09204-01006	PIN	1	
30	09440-19028	SPRING	1	
31	09443-10043	SPRING	1	

FIG.336G

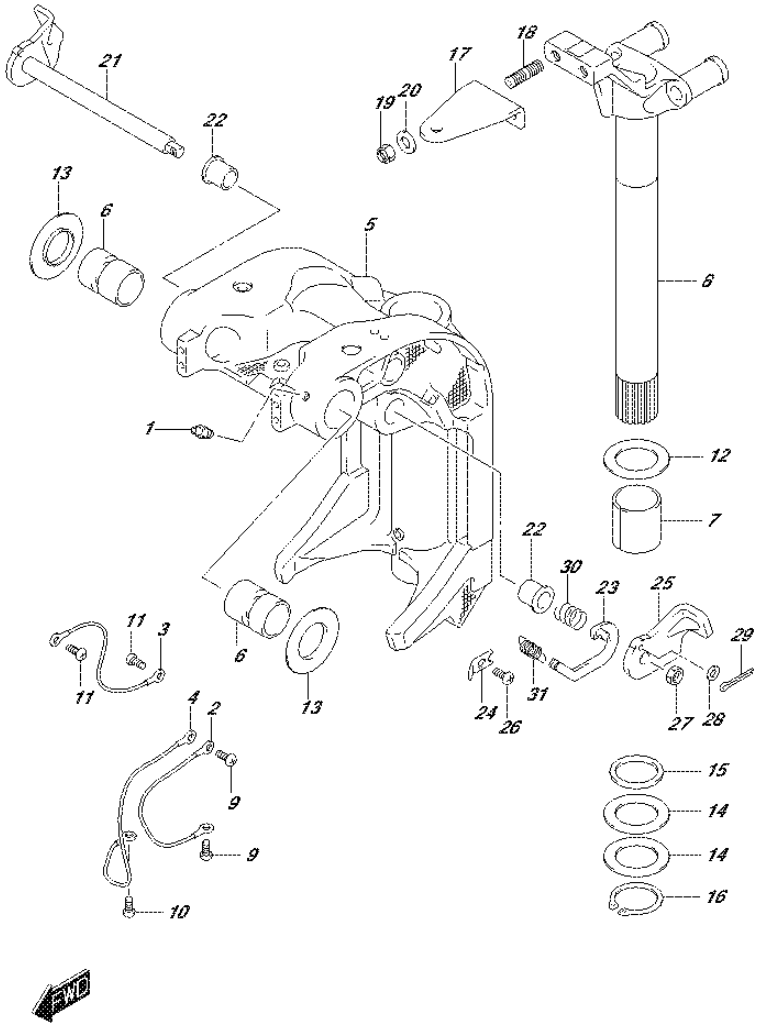

FIG.336G (2-B-11) SWIVEL BRACKET (DF90A E01)

REF NO.	PART NO.	DESCRIPTION	Q'TY	REMARKS
1	22511-99011	NIPPLE, GREASE	5	
2	36894-87D00	LEAD (SWIVEL TO MOUNT BRKT)	1	L:165
3	36894-87D00	LEAD (CLAMP TO SWIVEL)	1	L:165
4	36895-87D10	LEAD (SWIVEL TO HOUSING)	1	L:310
5-1	43111-87L20-0EP	BRACKET, SWIVEL (BLACK)	1	
5-2	43111-87L20-Y5S	BRACKET, SWIVEL (WHITE)	1	
6	43211-93J00	BUSH, CLAMP SHAFT SWIVEL	2	
7	43711-97E01	BUSH, STEERING	2	
8-1	43750-87L20-0EP	BRACKET, STEERING (BLACK)	1	
8-2	43750-87L20-Y5S	BRACKET, STEERING (WHITE)	1	
9	09125-06063	SCREW (6X10)	2	
10	09125-06063	SCREW (6X10)	1	
11	09125-06063	SCREW (6X10)	2	
12	09160-39001	WASHER (39.5X64X1)	2	
13	09169-28003	WASHER	2	
14	09181-39001	SHIM (39.5X64X0.3)	4	
15	09282-39001	OIL SEAL (39X51X5)	1	
16	09380-38003	CIRCLIP	1	
17	43755-87L00	ATTACHMENT, STEERING BRKT	1	
18	09108-10156	STUD BOLT	2	
19	09159-10050	NUT	2	
20	09160-10141	WASHER (10.5X19X2)	2	
21	41220-93J11	LEVER, TILT LOCK	1	
22	41224-95E01	BUSH, TILT STOPPER ROD	2	
23	41230-87L00	LINK, TILT LOCK LEVER	1	
24	41233-95E10	BRACKET, TILT LOCK SPRING	1	
25	41234-93J11	LEVER, TILT LOCK PORT	1	
26	09125-06063	SCREW (6X10)	1	
27	09140-10032	NUT	1	
28	09160-06082	WASHER (6.5X13X1.0)	1	
29	09204-01006	PIN	1	
30	09440-19028	SPRING	1	
31	09443-10043	SPRING	1	

FIG.336H

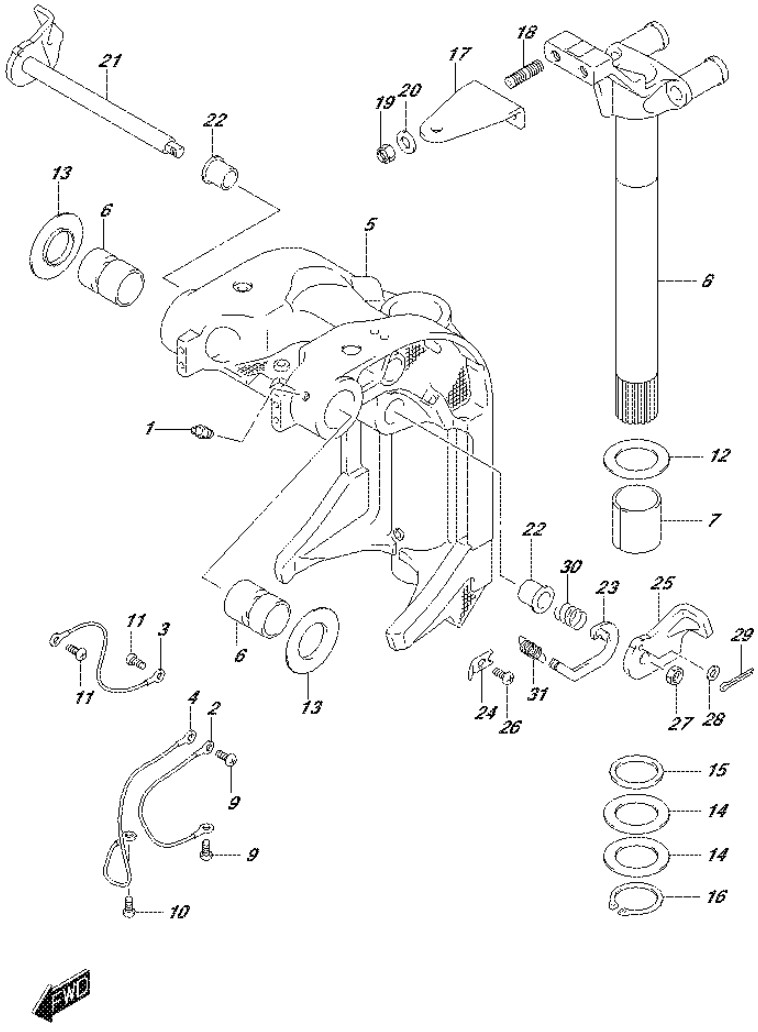

FIG.336H (2-B-12) SWIVEL BRACKET (DF90A E40)

REF NO.	PART NO.	DESCRIPTION	Q'TY	REMARKS
1	22511-99011	NIPPLE, GREASE	5	
2	36894-87D00	LEAD (SWIVEL TO MOUNT BRKT)	1	L:165
3	36894-87D00	LEAD (CLAMP TO SWIVEL)	1	L:165
4	36895-87D10	LEAD (SWIVEL TO HOUSING)	1	L:310
5-1	43111-87L20-0EP	BRACKET, SWIVEL (BLACK)	1	
5-2	43111-87L20-Y5S	BRACKET, SWIVEL (WHITE)	1	
6	43211-93J00	BUSH, CLAMP SHAFT SWIVEL	2	
7	43711-97E01	BUSH, STEERING	2	
8-1	43750-87L20-0EP	BRACKET, STEERING (BLACK)	1	
8-2	43750-87L20-Y5S	BRACKET, STEERING (WHITE)	1	
9	09125-06063	SCREW (6X10)	2	
10	09125-06063	SCREW (6X10)	1	
11	09125-06063	SCREW (6X10)	2	
12	09160-39001	WASHER (39.5X64X1)	2	
13	09169-28003	WASHER	2	
14	09181-39001	SHIM (39.5X64X0.3)	4	
15	09282-39001	OIL SEAL (39X51X5)	1	
16	09380-38003	CIRCLIP	1	
17	43755-87L00	ATTACHMENT, STEERING BRKT	1	
18	09108-10156	STUD BOLT	2	
19	09159-10050	NUT	2	
20	09160-10141	WASHER (10.5X19X2)	2	
21	41220-93J11	LEVER, TILT LOCK	1	
22	41224-95E01	BUSH, TILT STOPPER ROD	2	
23	41230-87L00	LINK, TILT LOCK LEVER	1	
24	41233-95E10	BRACKET, TILT LOCK SPRING	1	
25	41234-93J11	LEVER, TILT LOCK PORT	1	
26	09125-06063	SCREW (6X10)	1	
27	09140-10032	NUT	1	
28	09160-06082	WASHER (6.5X13X1.0)	1	
29	09204-01006	PIN	1	
30	09440-19028	SPRING	1	
31	09443-10043	SPRING	1	

FIG.336J

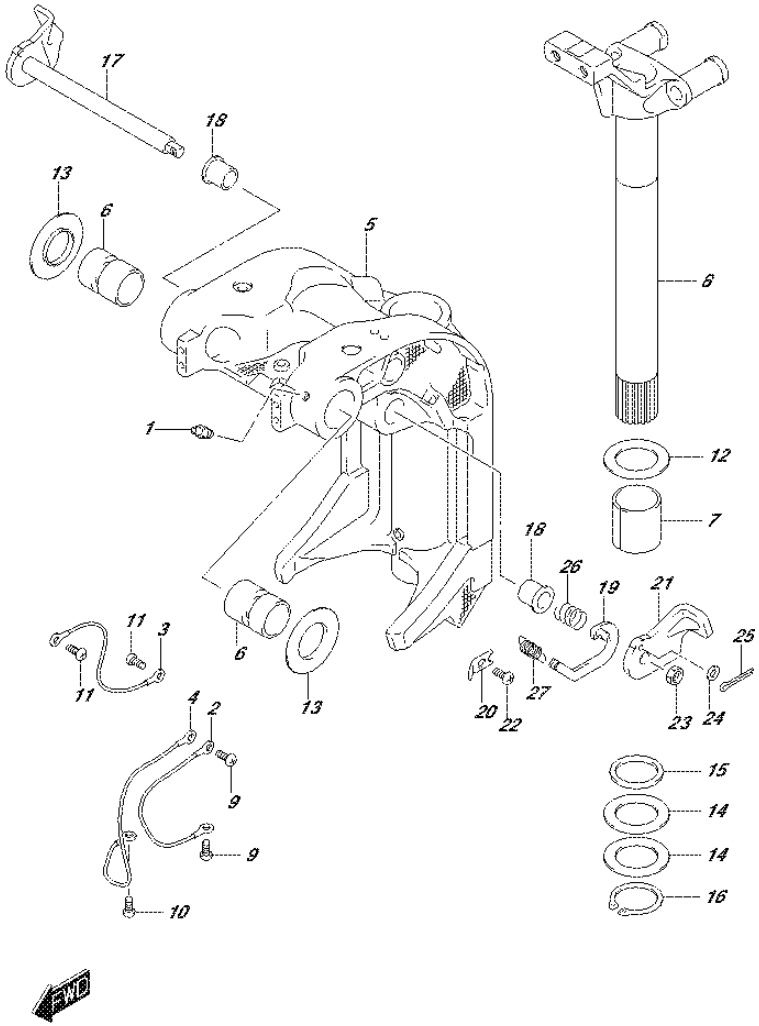

FIG.336J (2-B-13) SWIVEL BRACKET (DF90ATH E01)

REF NO.	PART NO.	DESCRIPTION	Q'TY	REMARKS
1	22511-99011	NIPPLE, GREASE	5	
2	36894-87D00	LEAD (SWIVEL TO MOUNT BRKT)	1	L:165
3	36894-87D00	LEAD (CLAMP TO SWIVEL)	1	L:165
4	36895-87D10	LEAD (SWIVEL TO HOUSING)	1	L:310
5	43111-87L20-0EP	BRACKET, SWIVEL (BLACK)	1	
6	43211-93J00	BUSH, CLAMP SHAFT SWIVEL	2	
7	43711-97E01	BUSH, STEERING	2	
8	43750-87L20-0EP	BRACKET, STEERING (BLACK)	1	
9	09125-06063	SCREW (6X10)	2	
10	09125-06063	SCREW (6X10)	1	
11	09125-06063	SCREW (6X10)	2	
12	09160-39001	WASHER (39.5X64X1)	2	
13	09169-28003	WASHER	2	
14	09181-39001	SHIM (39.5X64X0.3)	4	
15	09282-39001	OIL SEAL (39X51X5)	1	
16	09380-38003	CIRCLIP	1	
17	41220-93J11	LEVER, TILT LOCK	1	
18	41224-95E01	BUSH, TILT STOPPER ROD	2	
19	41230-87L00	LINK, TILT LOCK LEVER	1	
20	41233-95E10	BRACKET, TILT LOCK SPRING	1	
21	41234-93J11	LEVER, TILT LOCK PORT	1	
22	09125-06063	SCREW (6X10)	1	
23	09140-10032	NUT	1	
24	09160-06082	WASHER (6.5X13X1.0)	1	
25	09204-01006	PIN	1	
26	09440-19028	SPRING	1	
27	09443-10043	SPRING	1	

FIG.336K

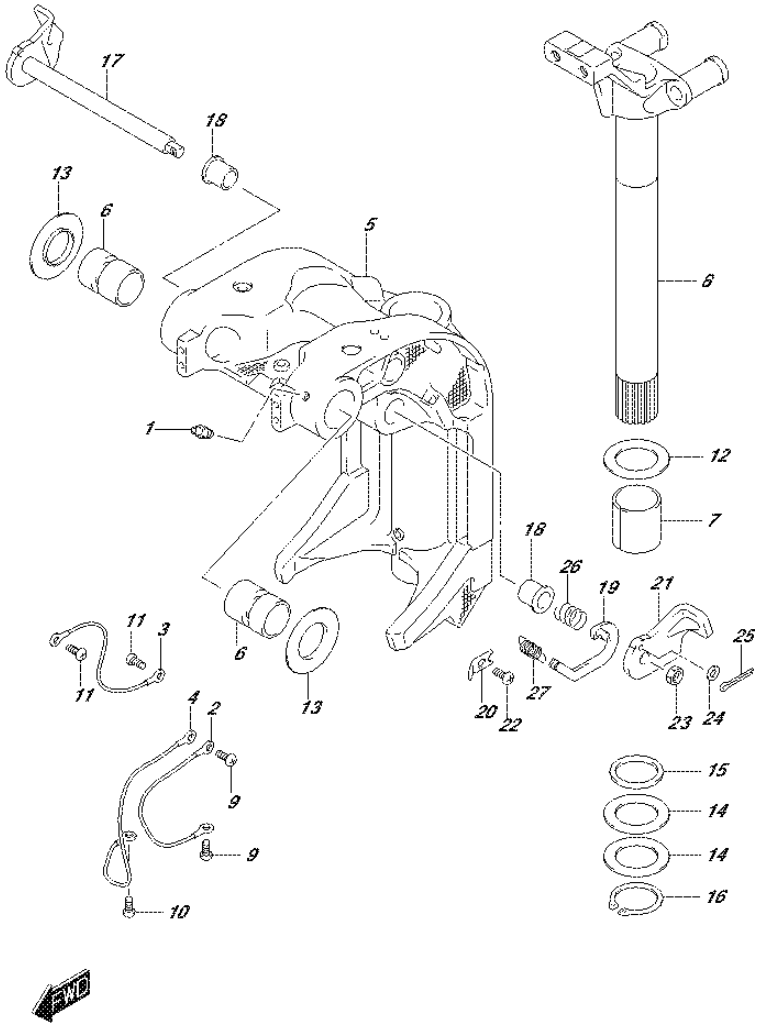

FIG.336K (2-B-14) SWIVEL BRACKET (DF90ATH E40)

REF NO.	PART NO.	DESCRIPTION	Q'TY	REMARKS
1	22511-99011	NIPPLE, GREASE	5	
2	36894-87D00	LEAD (SWIVEL TO MOUNT BRKT)	1	L:165
3	36894-87D00	LEAD (CLAMP TO SWIVEL)	1	L:165
4	36895-87D10	LEAD (SWIVEL TO HOUSING)	1	L:310
5	43111-87L20-0EP	BRACKET, SWIVEL (BLACK)	1	
6	43211-93J00	BUSH, CLAMP SHAFT SWIVEL	2	
7	43711-97E01	BUSH, STEERING	2	
8	43750-87L20-0EP	BRACKET, STEERING (BLACK)	1	
9	09125-06063	SCREW (6X10)	2	
10	09125-06063	SCREW (6X10)	1	
11	09125-06063	SCREW (6X10)	2	
12	09160-39001	WASHER (39.5X64X1)	2	
13	09169-28003	WASHER	2	
14	09181-39001	SHIM (39.5X64X0.3)	4	
15	09282-39001	OIL SEAL (39X51X5)	1	
16	09380-38003	CIRCLIP	1	
17	41220-93J11	LEVER, TILT LOCK	1	
18	41224-95E01	BUSH, TILT STOPPER ROD	2	
19	41230-87L00	LINK, TILT LOCK LEVER	1	
20	41233-95E10	BRACKET, TILT LOCK SPRING	1	
21	41234-93J11	LEVER, TILT LOCK PORT	1	
22	09125-06063	SCREW (6X10)	1	
23	09140-10032	NUT	1	
24	09160-06082	WASHER (6.5X13X1.0)	1	
25	09204-01006	PIN	1	
26	09440-19028	SPRING	1	
27	09443-10043	SPRING	1	

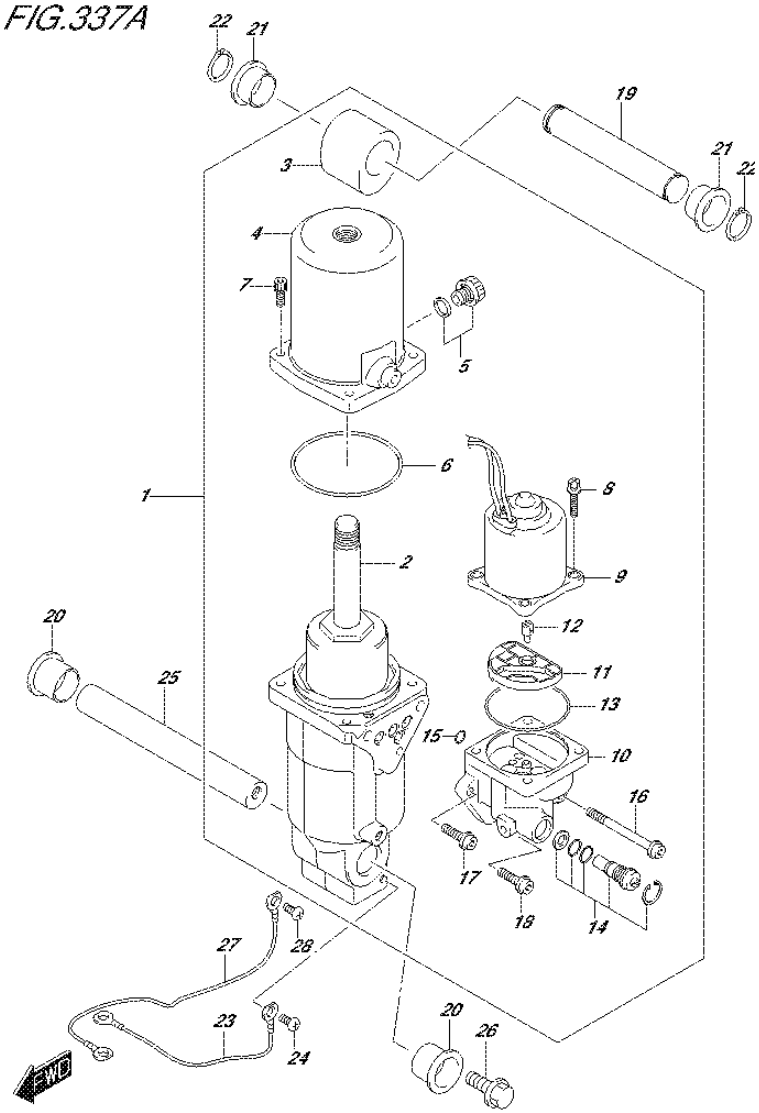

FIG.337A (2-B-15) TRIM CYLINDER

REF NO.	PART NO.	DESCRIPTION	Q'TY	REMARKS
1	48000-87L03	TRIM ASSY, POWER WITH TILT	1	
2	48400-87L02	.MANIFOLD ASSY	1	
3	48611-87L00	.JOINT, METAL	1	
4	48571-87L00	.TANK, RESERVOIR	1	
5	48572-87L00	.PLUG	1	
6	48557-90J00	.O RING	1	
7	48862-87J20	.BOLT, RESERVOIR	4	
8	31281-92J10	.BOLT, THROUGH	4	
9	38100-87L01	.MOTOR ASSY, PTT	1	
10	48502-87L02	.PUMP ASSY	1	
11	48582-95E01	.FILTER	1	
12	48583-95E00	.JOINT, DRIVE	1	
13	48585-95E00	.O RING	1	
14	48864-96J10	.VALVE SET, MANUAL	1	
15	48588-90J00	.O RING SET	1	
16	48862-92J20	.BOLT, PUMP NO.1	1	
17	48862-92J30	.BOLT, PUMP NO.2	1	
18	48862-90J21	.BOLT	1	
19	48321-90J00	SHAFT, TILT CYL UPPER	1	
20	48326-95E00	BUSH, TILT CYL LOWER	2	
21	48325-87L00	BUSH, TILT CYL UPPER	2	
22	09380-22015	CIRCLIP	2	
23	36894-87D00	LEAD, PTT TO ANODE (L:165)	1	
24	09125-06063	SCREW (6X10)	1	
25	48121-90J00	SHAFT, TILT CYL LOWER	1	
26	09116-10179	BOLT (10X35)	2	
27	36895-87D10	LEAD, PTT TO ANODE (L:310)	1	
28	09125-05050	SCREW (5X8)	1	

DF90A_E01_015_337A
TRIM CYLINDER

FIG.340A

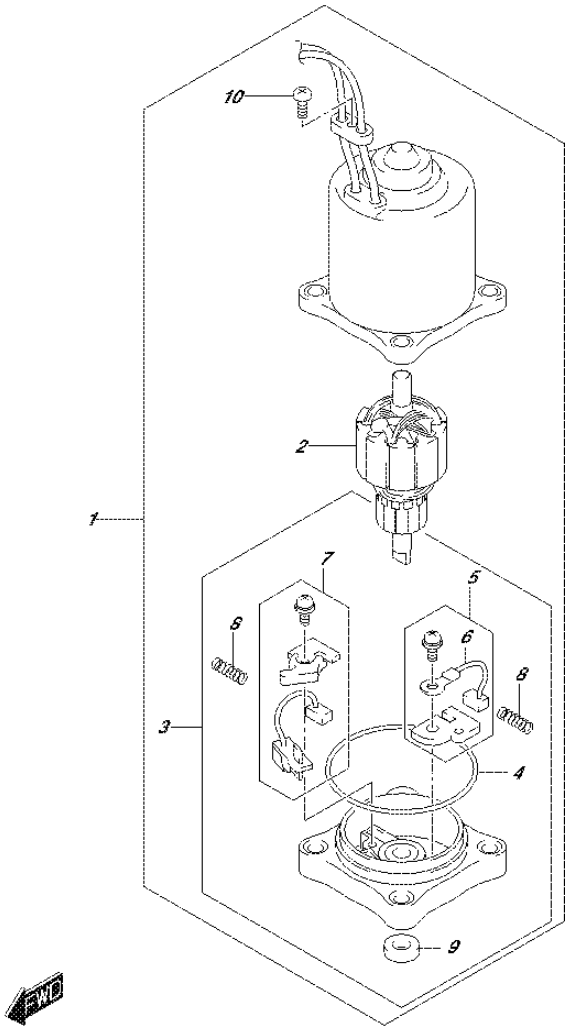

FIG.340A (2-C-2) PTT MOTOR

REF NO.	PART NO.	DESCRIPTION	Q'TY	REMARKS
1	38100-87L01	MOTOR ASSY, PTT	1	
2	31311-93J00	.ARMATURE	1	
3	31173-94910	.HOLDER, BRUSH	1	
4	31123-94910	..O RING	1	
5	31133-90J00	..BRUSH SET	1	
6	31133-94900	...BRUSH, PLUS	1	
7	31136-90J10	..BREAKER ASSY	1	
8	31135-94900	..SPRING	2	
9	33799-97E00	..OIL SEAL	1	
10	31111-94900	.SCREW	1	

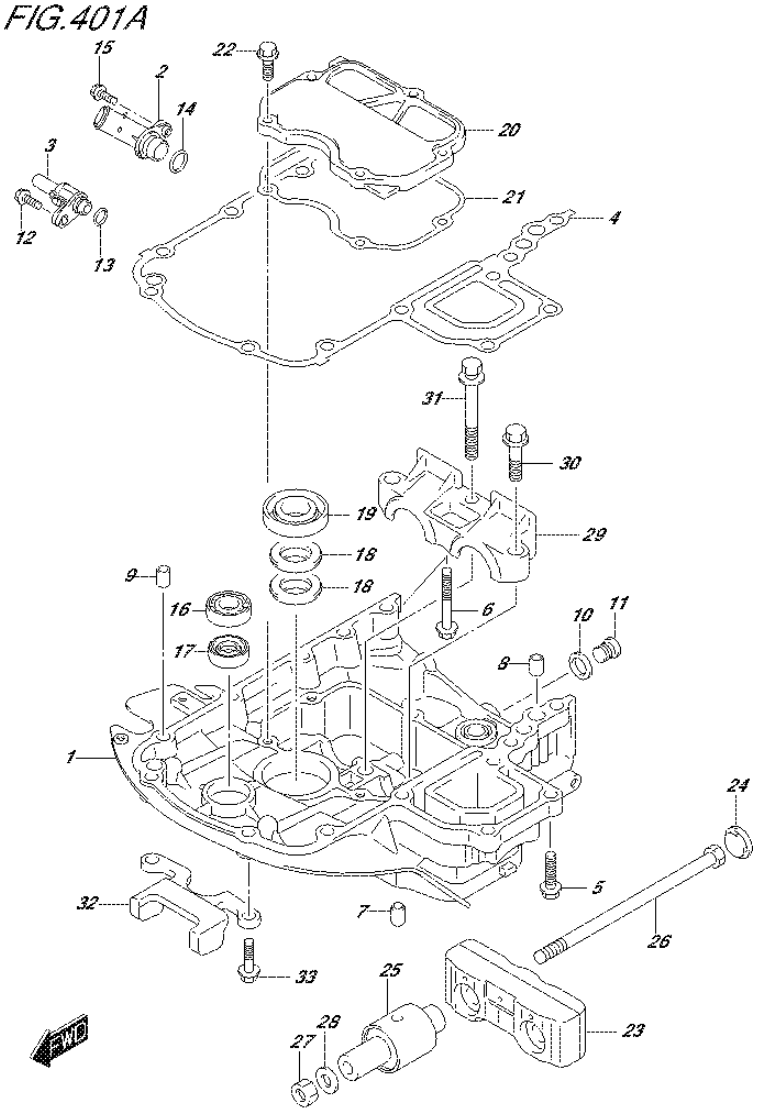

FIG.401A (2-C-3) ENGINE HOLDER (DF70A E01)

REF NO.	PART NO.	DESCRIPTION	Q'TY	REMARKS
1-1	51111-87L00-0EP	HOLDER, ENGINE (BLACK)	1	
1-2	51111-87L00-Y5S	HOLDER, ENGINE (WHITE)	1	
2	51115-87L00	UNION, WATER RETURN	1	
3	51117-87L00	UNION, WATER INDICATOR	1	
4	51211-87L10	GASKET, ENGINE HOLDER	1	
5	09116-08128	BOLT (8X40)	7	
6	09116-08159	BOLT (8X55)	1	
7	09202-08006	PIN (8X12)	2	
8	04211-11129	PIN	2	
9	04211-11129	PIN	1	
10	09160-18031	WASHER (18.5X28X2.6)	1	
11	09248-18010	PLUG (18X15)	1	
12	29116-93J00	BOLT, WATER INDICATOR UNION	1	
13	09280-11001	O RING (D:2.4,ID:10.8)	1	
14	09280-20002	O RING (D:3.1,ID:19.4)	1	
15	01550-06207	BOLT	1	
16	09262-17019	BEARING (17X35X8)	1	
17	09289-18001	OIL SEAL (18X30X8)	1	
18	09282-22007	OIL SEAL (22X36X6)	2	
19	12281-87J00	SEAL, DRIVEN GEAR	1	
20	51122-87L00	COVER, MOUNT CASE	1	
21	51123-87L00	GASKET, MOUNT CASE COVER	1	
22	01550-0825A	BOLT	5	
23	54120-87L10	MOUNT, UPPER THRUST	1	
24	54122-87L00	SPACER, UPPER THRUST MOUNT	2	
25	54130-87L00	MOUNT, UPPER	2	
26	54166-95J02	BOLT, UPPER MOUNT	2	
27	09159-12014	NUT	2	
28	09160-12110	WASHER (12.5X22X3)	2	

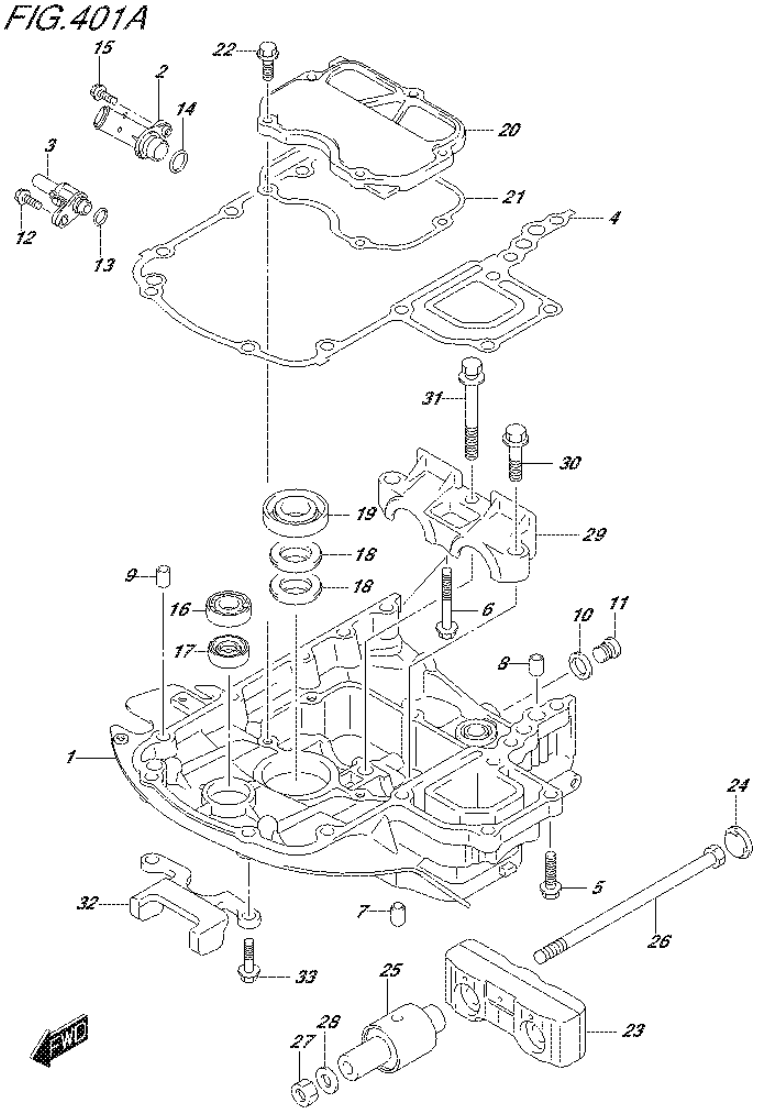

FIG.401A (2-C-4) ENGINE HOLDER (DF70A E01)

REF NO.	PART NO.	DESCRIPTION	Q'TY	REMARKS
29-1	54137-87L00-0EP	COVER, UPPER MOUNT (BLACK)	1	
29-2	54137-87L00-Y5S	COVER, UPPER MOUNT (WHITE)	1	
30	09116-10176	BOLT (10X44)	2	
31	09116-10147	BOLT (10X85)	1	
32	54140-87L10	STOPPER, UPPER UNIT	1	
33	09116-08137	BOLT (8X22)	2	

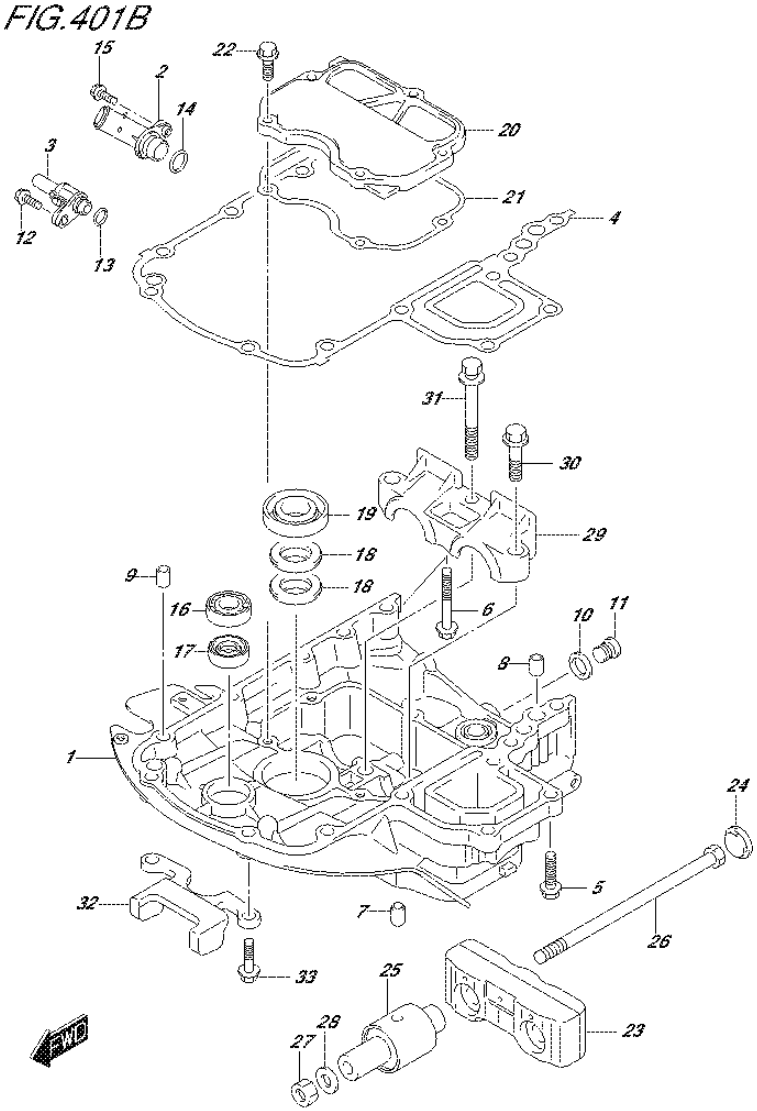

FIG.401B (2-C-5) ENGINE HOLDER (DF70A E40)

REF NO.	PART NO.	DESCRIPTION	Q'TY	REMARKS
1-1	51111-87L00-0EP	HOLDER, ENGINE (BLACK)	1	
1-2	51111-87L00-Y5S	HOLDER, ENGINE (WHITE)	1	
2	51115-87L00	UNION, WATER RETURN	1	
3	51117-87L00	UNION, WATER INDICATOR	1	
4	51211-87L10	GASKET, ENGINE HOLDER	1	
5	09116-08128	BOLT (8X40)	7	
6	09116-08159	BOLT (8X55)	1	
7	09202-08006	PIN (8X12)	2	
8	04211-11129	PIN	2	
9	04211-11129	PIN	1	
10	09160-18031	WASHER (18.5X28X2.6)	1	
11	09248-18010	PLUG (18X15)	1	
12	29116-93J00	BOLT, WATER INDICATOR UNION	1	
13	09280-11001	O RING (D:2.4,ID:10.8)	1	
14	09280-20002	O RING (D:3.1,ID:19.4)	1	
15	01550-06207	BOLT	1	
16	09262-17019	BEARING (17X35X8)	1	
17	09289-18001	OIL SEAL (18X30X8)	1	
18	09282-22007	OIL SEAL (22X36X6)	2	
19	12281-87J00	SEAL, DRIVEN GEAR	1	
20	51122-87L00	COVER, MOUNT CASE	1	
21	51123-87L00	GASKET, MOUNT CASE COVER	1	
22	01550-0825A	BOLT	5	
23	54120-87L10	MOUNT, UPPER THRUST	1	
24	54122-87L00	SPACER, UPPER THRUST MOUNT	2	
25	54130-87L00	MOUNT, UPPER	2	
26	54166-95J02	BOLT, UPPER MOUNT	2	
27	09159-12014	NUT	2	
28	09160-12110	WASHER (12.5X22X3)	2	

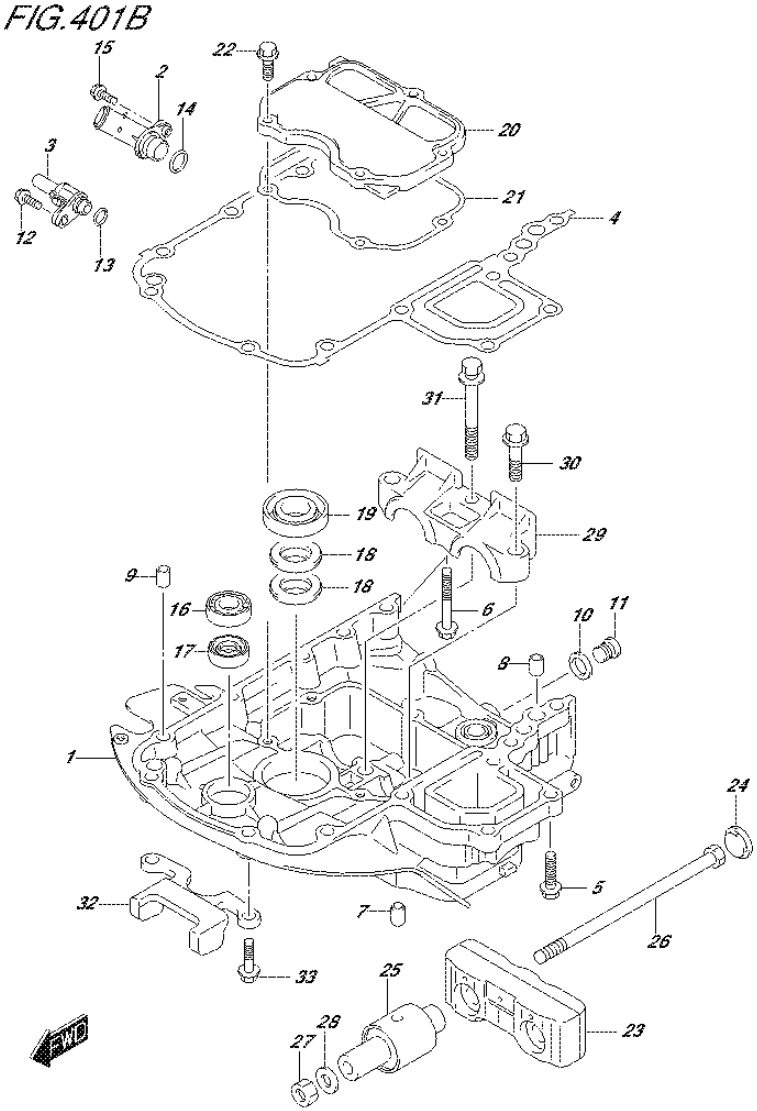

FIG.401B (2-C-6) ENGINE HOLDER (DF70A E40)

REF NO.	PART NO.	DESCRIPTION	Q'TY	REMARKS
29-1	54137-87L00-0EP	COVER, UPPER MOUNT (BLACK)	1	
29-2	54137-87L00-Y5S	COVER, UPPER MOUNT (WHITE)	1	
30	09116-10176	BOLT (10X44)	2	
31	09116-10147	BOLT (10X85)	1	
32	54140-87L10	STOPPER, UPPER UNIT	1	
33	09116-08137	BOLT (8X22)	2	

FIG.401C

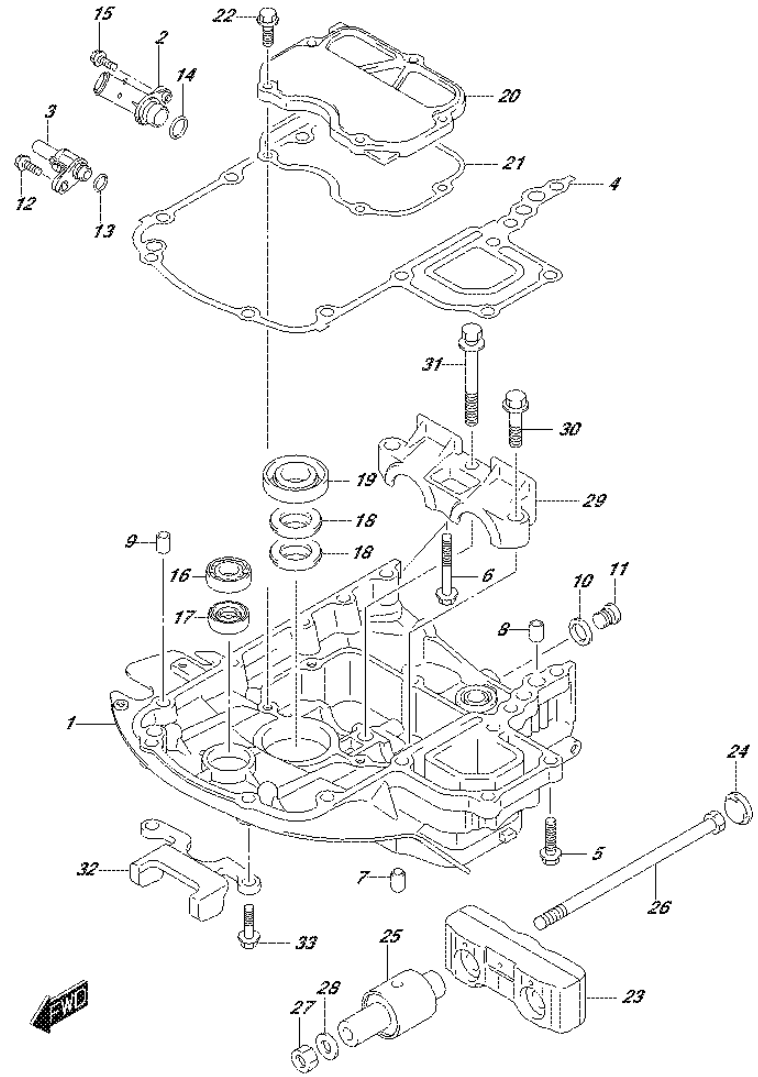

FIG.401C (2-C-7) ENGINE HOLDER (DF70ATH E01)

REF NO.	PART NO.	DESCRIPTION	Q'TY	REMARKS
1	51111-87L00-0EP	HOLDER, ENGINE (BLACK)	1	
2	51115-87L00	UNION, WATER RETURN	1	
3	51117-87L00	UNION, WATER INDICATOR	1	
4	51211-87L10	GASKET, ENGINE HOLDER	1	
5	09116-08128	BOLT (8X40)	7	
6	09116-08159	BOLT (8X55)	1	
7	09202-08006	PIN (8X12)	2	
8	04211-11129	PIN	2	
9	04211-11129	PIN	1	
10	09160-18031	WASHER (18.5X28X2.6)	1	
11	09248-18010	PLUG (18X15)	1	
12	29116-93J00	BOLT, WATER INDICATOR UNION	1	
13	09280-11001	O RING (D:2.4,ID:10.8)	1	
14	09280-20002	O RING (D:3.1,ID:19.4)	1	
15	01550-06207	BOLT	1	
16	09262-17019	BEARING (17X35X8)	1	
17	09289-18001	OIL SEAL (18X30X8)	1	
18	09282-22007	OIL SEAL (22X36X6)	2	
19	12281-87J00	SEAL, DRIVEN GEAR	1	
20	51122-87L00	COVER, MOUNT CASE	1	
21	51123-87L00	GASKET, MOUNT CASE COVER	1	
22	01550-0825A	BOLT	5	
23	54120-87L10	MOUNT, UPPER THRUST	1	
24	54122-87L00	SPACER, UPPER THRUST MOUNT	2	
25	54130-87L00	MOUNT, UPPER	2	
26	54166-95J02	BOLT, UPPER MOUNT	2	
27	09159-12014	NUT	2	
28	09160-12110	WASHER (12.5X22X3)	2	
29	54137-87L00-0EP	COVER, UPPER MOUNT (BLACK)	1	
30	09116-10176	BOLT (10X44)	2	
31	09116-10147	BOLT (10X85)	1	
32	54140-87L10	STOPPER, UPPER UNIT	1	
33	09116-08137	BOLT (8X22)	2	

FIG.401D

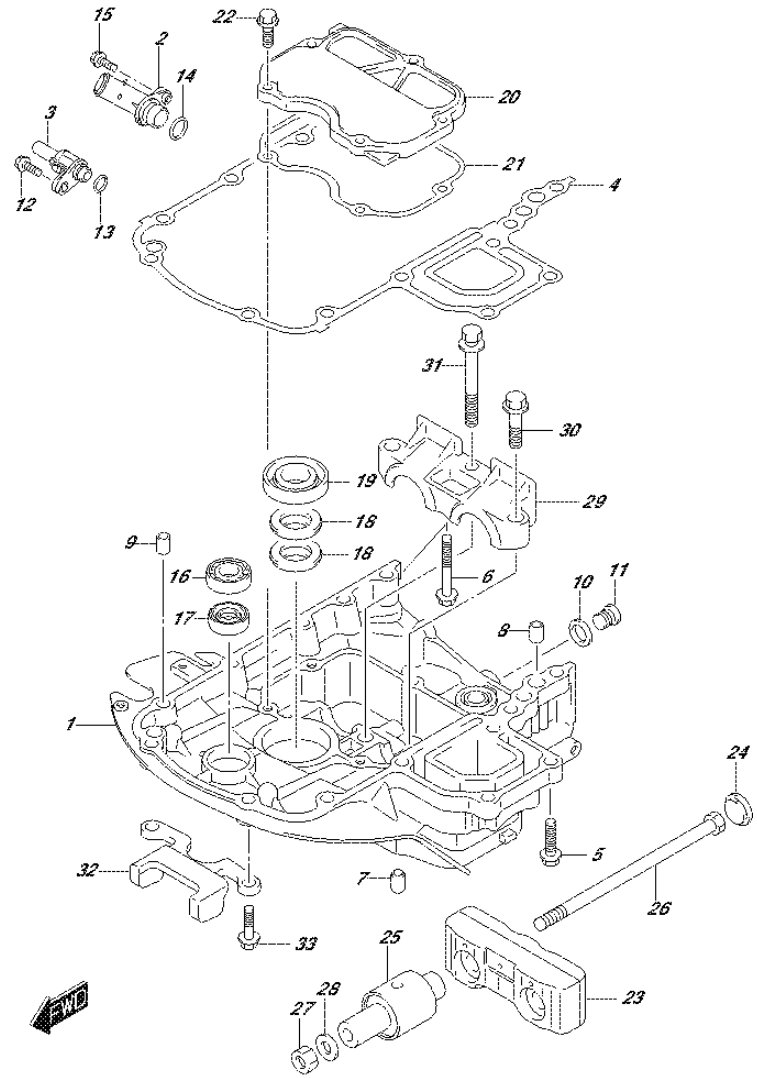

FIG.401D (2-C-8) ENGINE HOLDER (DF70ATH E40)

REF NO.	PART NO.	DESCRIPTION	Q'TY	REMARKS
1	51111-87L00-0EP	HOLDER, ENGINE (BLACK)	1	
2	51115-87L00	UNION, WATER RETURN	1	
3	51117-87L00	UNION, WATER INDICATOR	1	
4	51211-87L10	GASKET, ENGINE HOLDER	1	
5	09116-08128	BOLT (8X40)	7	
6	09116-08159	BOLT (8X55)	1	
7	09202-08006	PIN (8X12)	2	
8	04211-11129	PIN	2	
9	04211-11129	PIN	1	
10	09160-18031	WASHER (18.5X28X2.6)	1	
11	09248-18010	PLUG (18X15)	1	
12	29116-93J00	BOLT, WATER INDICATOR UNION	1	
13	09280-11001	O RING (D:2.4,ID:10.8)	1	
14	09280-20002	O RING (D:3.1,ID:19.4)	1	
15	01550-06207	BOLT	1	
16	09262-17019	BEARING (17X35X8)	1	
17	09289-18001	OIL SEAL (18X30X8)	1	
18	09282-22007	OIL SEAL (22X36X6)	2	
19	12281-87J00	SEAL, DRIVEN GEAR	1	
20	51122-87L00	COVER, MOUNT CASE	1	
21	51123-87L00	GASKET, MOUNT CASE COVER	1	
22	01550-0825A	BOLT	5	
23	54120-87L10	MOUNT, UPPER THRUST	1	
24	54122-87L00	SPACER, UPPER THRUST MOUNT	2	
25	54130-87L00	MOUNT, UPPER	2	
26	54166-95J02	BOLT, UPPER MOUNT	2	
27	09159-12014	NUT	2	
28	09160-12110	WASHER (12.5X22X3)	2	
29	54137-87L00-0EP	COVER, UPPER MOUNT (BLACK)	1	
30	09116-10176	BOLT (10X44)	2	
31	09116-10147	BOLT (10X85)	1	
32	54140-87L10	STOPPER, UPPER UNIT	1	
33	09116-08137	BOLT (8X22)	2	

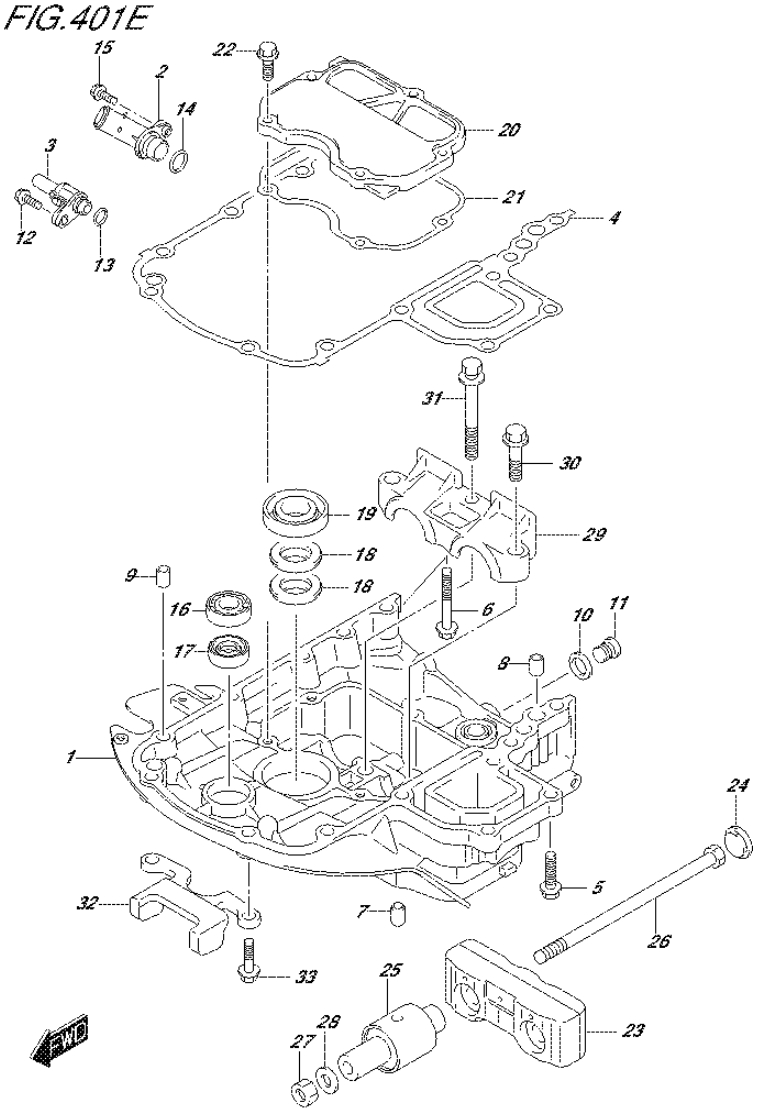

FIG.401E (2-C-9) ENGINE HOLDER (DF80A E01)

REF NO.	PART NO.	DESCRIPTION	Q'TY	REMARKS
1	51111-87L00-0EP	HOLDER, ENGINE (BLACK)	1	
2	51115-87L00	UNION, WATER RETURN	1	
3	51117-87L00	UNION, WATER INDICATOR	1	
4	51211-87L10	GASKET, ENGINE HOLDER	1	
5	09116-08128	BOLT (8X40)	7	
6	09116-08159	BOLT (8X55)	1	
7	09202-08006	PIN (8X12)	2	
8	04211-11129	PIN	2	
9	04211-11129	PIN	1	
10	09160-18031	WASHER (18.5X28X2.6)	1	
11	09248-18010	PLUG (18X15)	1	
12	29116-93J00	BOLT, WATER INDICATOR UNION	1	
13	09280-11001	O RING (D:2.4,ID:10.8)	1	
14	09280-20002	O RING (D:3.1,ID:19.4)	1	
15	01550-06207	BOLT	1	
16	09262-17019	BEARING (17X35X8)	1	
17	09289-18001	OIL SEAL (18X30X8)	1	
18	09282-22007	OIL SEAL (22X36X6)	2	
19	12281-87J00	SEAL, DRIVEN GEAR	1	
20	51122-87L00	COVER, MOUNT CASE	1	
21	51123-87L00	GASKET, MOUNT CASE COVER	1	
22	01550-0825A	BOLT	5	
23	54120-87L10	MOUNT, UPPER THRUST	1	
24	54122-87L00	SPACER, UPPER THRUST MOUNT	2	
25	54130-87L00	MOUNT, UPPER	2	
26	54166-95J02	BOLT, UPPER MOUNT	2	
27	09159-12014	NUT	2	
28	09160-12110	WASHER (12.5X22X3)	2	

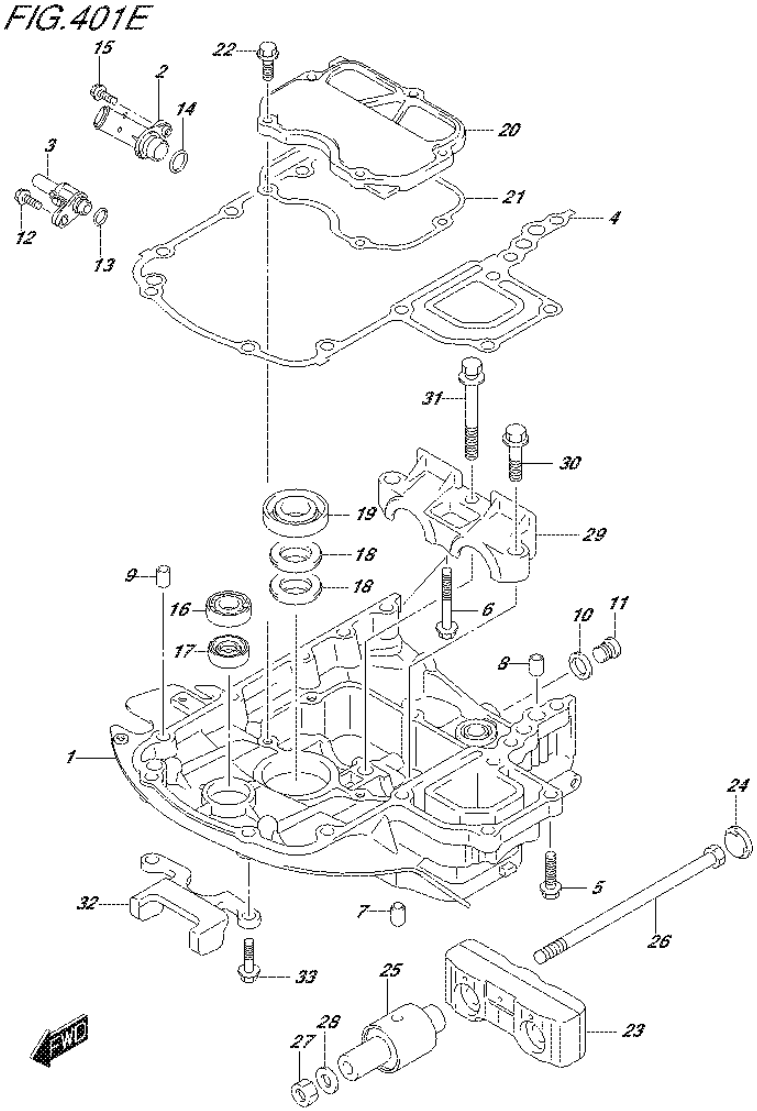

FIG.401E (2-C-10) ENGINE HOLDER (DF80A E01)

REF NO.	PART NO.	DESCRIPTION	Q'TY	REMARKS
29	54137-87L00-0EP	COVER, UPPER MOUNT (BLACK)	1	
30	09116-10176	BOLT (10X44)	2	
31	09116-10147	BOLT (10X85)	1	
32	54140-87L10	STOPPER, UPPER UNIT	1	
33	09116-08137	BOLT (8X22)	2	

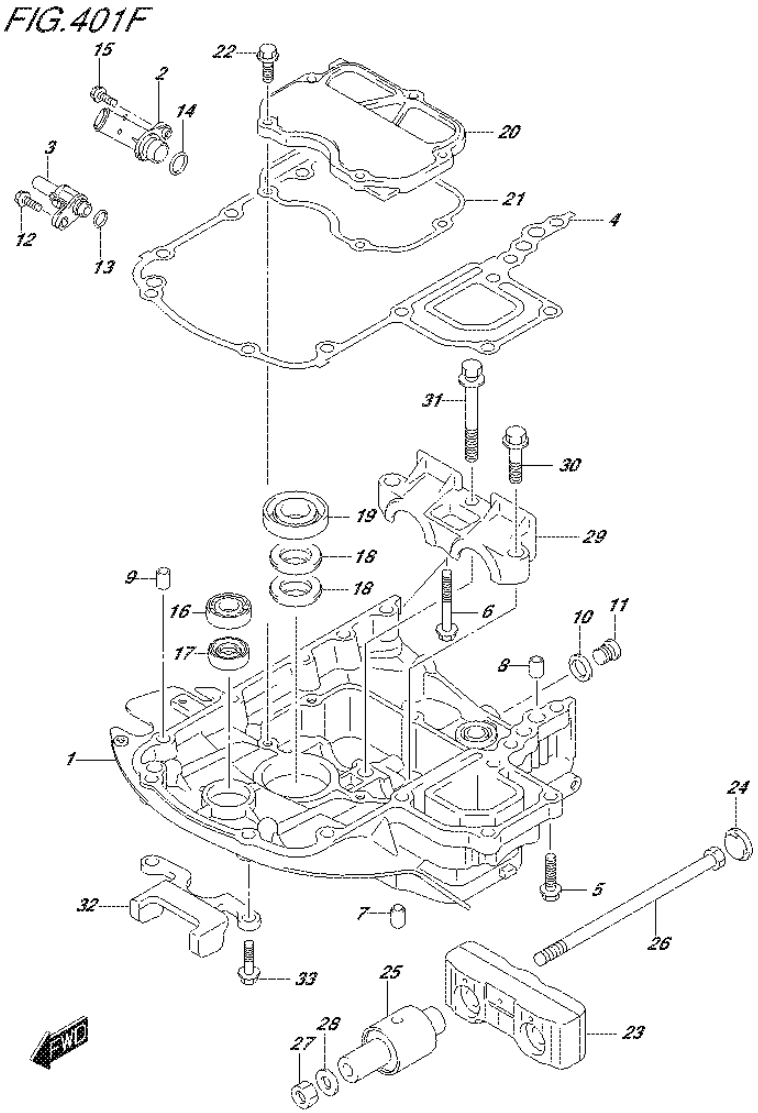

FIG.401F (2-C-11) ENGINE HOLDER (DF80A E40)

REF NO.	PART NO.	DESCRIPTION	Q'TY	REMARKS
1	51111-87L00-0EP	HOLDER, ENGINE (BLACK)	1	
2	51115-87L00	UNION, WATER RETURN	1	
3	51117-87L00	UNION, WATER INDICATOR	1	
4	51211-87L10	GASKET, ENGINE HOLDER	1	
5	09116-08128	BOLT (8X40)	7	
6	09116-08159	BOLT (8X55)	1	
7	09202-08006	PIN (8X12)	2	
8	04211-11129	PIN	2	
9	04211-11129	PIN	1	
10	09160-18031	WASHER (18.5X28X2.6)	1	
11	09248-18010	PLUG (18X15)	1	
12	29116-93J00	BOLT, WATER INDICATOR UNION	1	
13	09280-11001	O RING (D:2.4,ID:10.8)	1	
14	09280-20002	O RING (D:3.1,ID:19.4)	1	
15	01550-06207	BOLT	1	
16	09262-17019	BEARING (17X35X8)	1	
17	09289-18001	OIL SEAL (18X30X8)	1	
18	09282-22007	OIL SEAL (22X36X6)	2	
19	12281-87J00	SEAL, DRIVEN GEAR	1	
20	51122-87L00	COVER, MOUNT CASE	1	
21	51123-87L00	GASKET, MOUNT CASE COVER	1	
22	01550-0825A	BOLT	5	
23	54120-87L10	MOUNT, UPPER THRUST	1	
24	54122-87L00	SPACER, UPPER THRUST MOUNT	2	
25	54130-87L00	MOUNT, UPPER	2	
26	54166-95J02	BOLT, UPPER MOUNT	2	
27	09159-12014	NUT	2	
28	09160-12110	WASHER (12.5X22X3)	2	

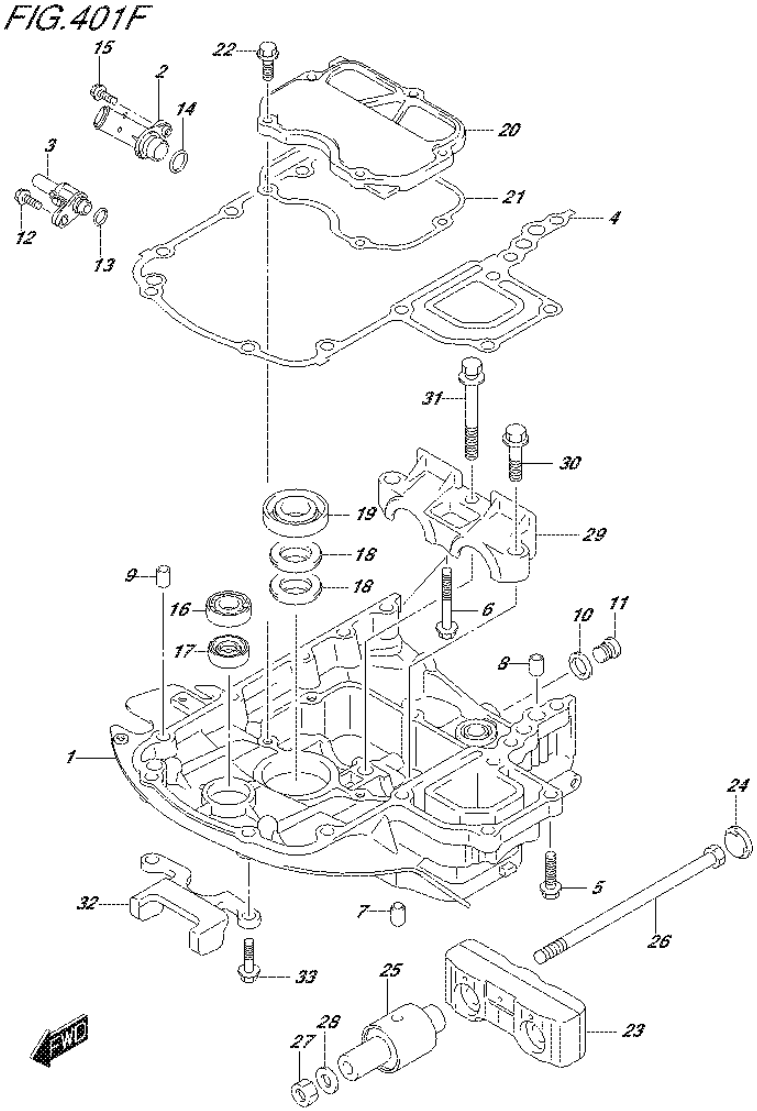

FIG.401F (2-C-12) ENGINE HOLDER (DF80A E40)

REF NO.	PART NO.	DESCRIPTION	Q'TY	REMARKS
29	54137-87L00-0EP	COVER, UPPER MOUNT (BLACK)	1	
30	09116-10176	BOLT (10X44)	2	
31	09116-10147	BOLT (10X85)	1	
32	54140-87L10	STOPPER, UPPER UNIT	1	
33	09116-08137	BOLT (8X22)	2	

FIG.401G

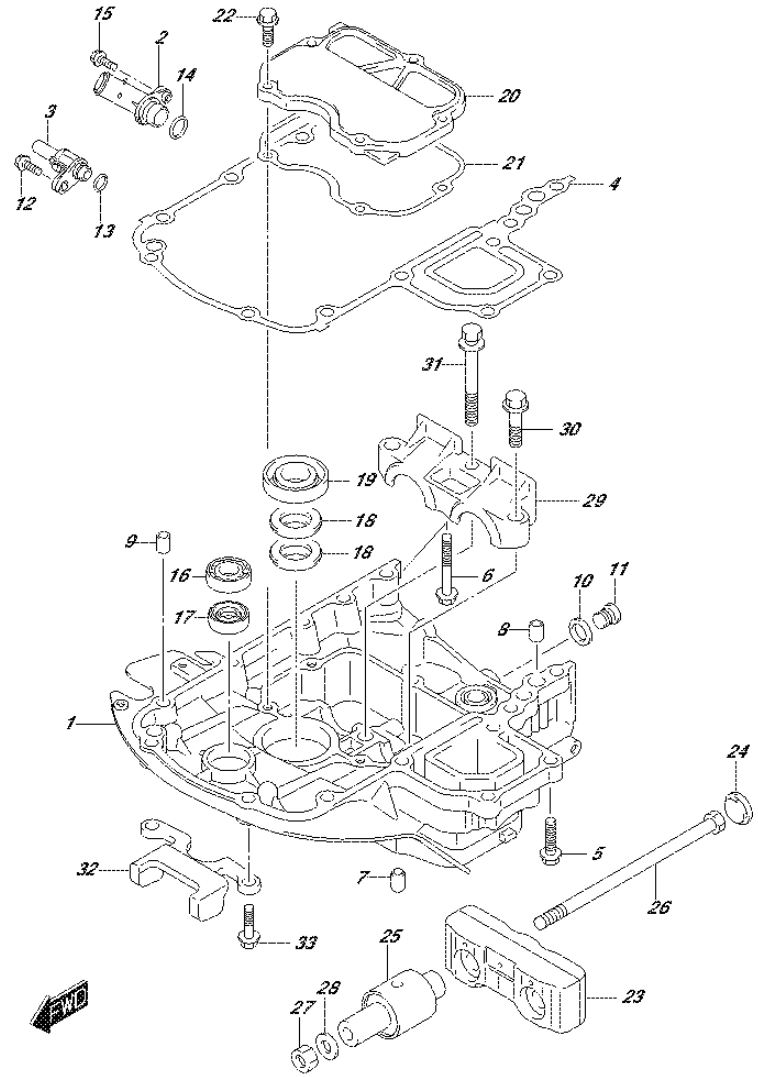

FIG.401G (2-C-13) ENGINE HOLDER (DF90A E01)

REF NO.	PART NO.	DESCRIPTION	Q'TY	REMARKS
1-1	51111-87L00-0EP	HOLDER, ENGINE (BLACK)	1	
1-2	51111-87L00-Y5S	HOLDER, ENGINE (WHITE)	1	
2	51115-87L00	UNION, WATER RETURN	1	
3	51117-87L00	UNION, WATER INDICATOR	1	
4	51211-87L10	GASKET, ENGINE HOLDER	1	
5	09116-08128	BOLT (8X40)	7	
6	09116-08159	BOLT (8X55)	1	
7	09202-08006	PIN (8X12)	2	
8	04211-11129	PIN	2	
9	04211-11129	PIN	1	
10	09160-18031	WASHER (18.5X28X2.6)	1	
11	09248-18010	PLUG (18X15)	1	
12	29116-93J00	BOLT, WATER INDICATOR UNION	1	
13	09280-11001	O RING (D:2.4,ID:10.8)	1	
14	09280-20002	O RING (D:3.1,ID:19.4)	1	
15	01550-06207	BOLT	1	
16	09262-17019	BEARING (17X35X8)	1	
17	09289-18001	OIL SEAL (18X30X8)	1	
18	09282-22007	OIL SEAL (22X36X6)	2	
19	12281-87J00	SEAL, DRIVEN GEAR	1	
20	51122-87L00	COVER, MOUNT CASE	1	
21	51123-87L00	GASKET, MOUNT CASE COVER	1	
22	01550-0825A	BOLT	5	
23	54120-87L10	MOUNT, UPPER THRUST	1	
24	54122-87L00	SPACER, UPPER THRUST MOUNT	2	
25	54130-87L00	MOUNT, UPPER	2	
26	54166-95J02	BOLT, UPPER MOUNT	2	
27	09159-12014	NUT	2	
28	09160-12110	WASHER (12.5X22X3)	2	

FIG.401G

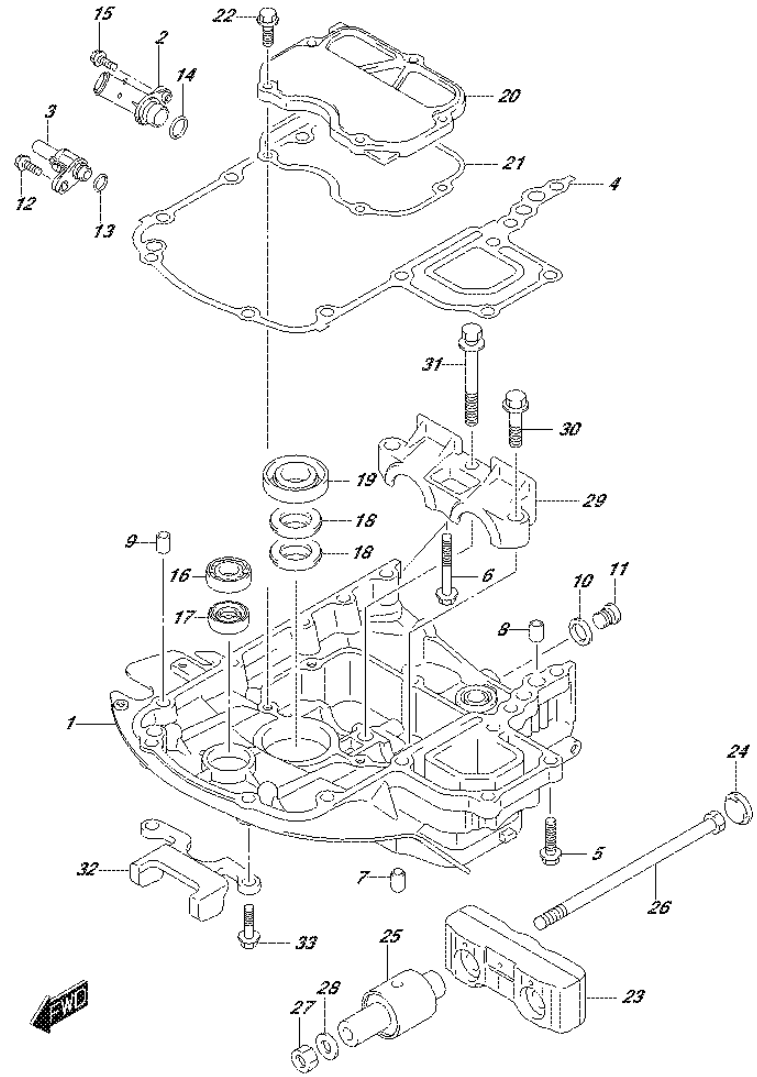

FIG.401G (2-C-14) ENGINE HOLDER (DF90A E01)

REF NO.	PART NO.	DESCRIPTION	Q'TY	REMARKS
29-1	54137-87L00-0EP	COVER, UPPER MOUNT (BLACK)	1	
29-2	54137-87L00-Y5S	COVER, UPPER MOUNT (WHITE)	1	
30	09116-10176	BOLT (10X44)	2	
31	09116-10147	BOLT (10X85)	1	
32	54140-87L10	STOPPER, UPPER UNIT	1	
33	09116-08137	BOLT (8X22)	2	

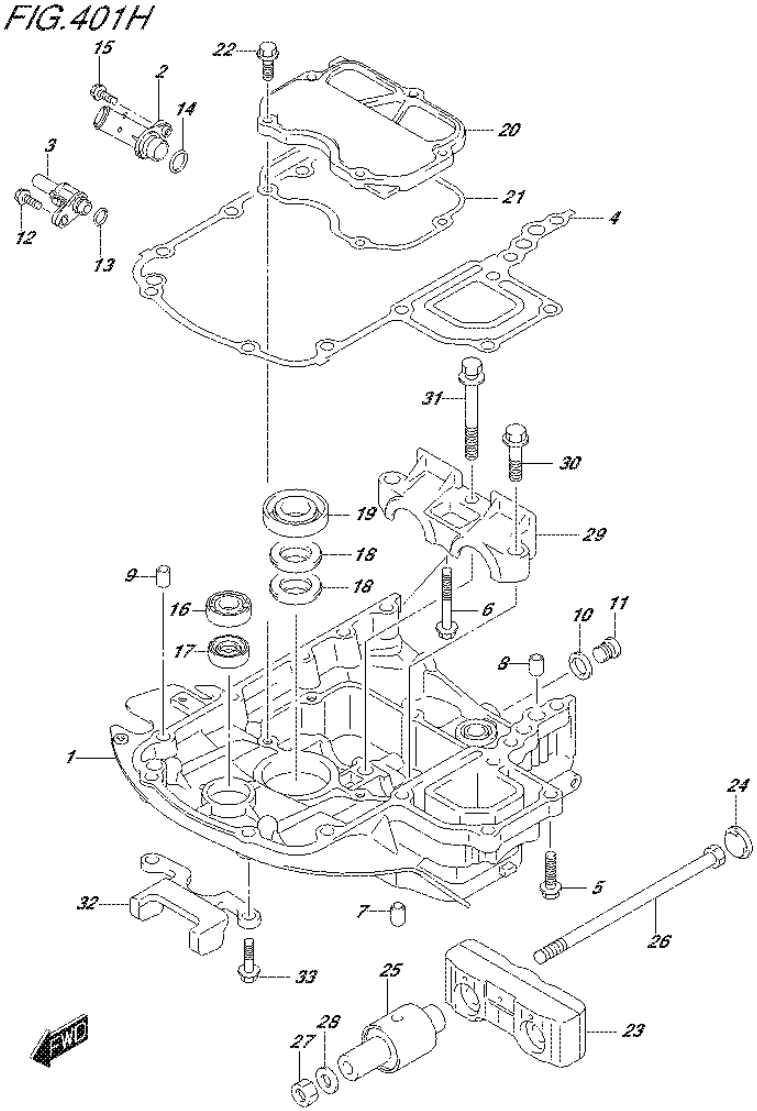

FIG.401H (2-C-15) ENGINE HOLDER (DF90A E40)

REF NO.	PART NO.	DESCRIPTION	Q'TY	REMARKS
1-1	51111-87L00-0EP	HOLDER, ENGINE (BLACK)	1	
1-2	51111-87L00-Y5S	HOLDER, ENGINE (WHITE)	1	
2	51115-87L00	UNION, WATER RETURN	1	
3	51117-87L00	UNION, WATER INDICATOR	1	
4	51211-87L10	GASKET, ENGINE HOLDER	1	
5	09116-08128	BOLT (8X40)	7	
6	09116-08159	BOLT (8X55)	1	
7	09202-08006	PIN (8X12)	2	
8	04211-11129	PIN	2	
9	04211-11129	PIN	1	
10	09160-18031	WASHER (18.5X28X2.6)	1	
11	09248-18010	PLUG (18X15)	1	
12	29116-93J00	BOLT, WATER INDICATOR UNION	1	
13	09280-11001	O RING (D:2.4,ID:10.8)	1	
14	09280-20002	O RING (D:3.1,ID:19.4)	1	
15	01550-06207	BOLT	1	
16	09262-17019	BEARING (17X35X8)	1	
17	09289-18001	OIL SEAL (18X30X8)	1	
18	09282-22007	OIL SEAL (22X36X6)	2	
19	12281-87J00	SEAL, DRIVEN GEAR	1	
20	51122-87L00	COVER, MOUNT CASE	1	
21	51123-87L00	GASKET, MOUNT CASE COVER	1	
22	01550-0825A	BOLT	5	
23	54120-87L10	MOUNT, UPPER THRUST	1	
24	54122-87L00	SPACER, UPPER THRUST MOUNT	2	
25	54130-87L00	MOUNT, UPPER	2	
26	54166-95J02	BOLT, UPPER MOUNT	2	
27	09159-12014	NUT	2	
28	09160-12110	WASHER (12.5X22X3)	2	

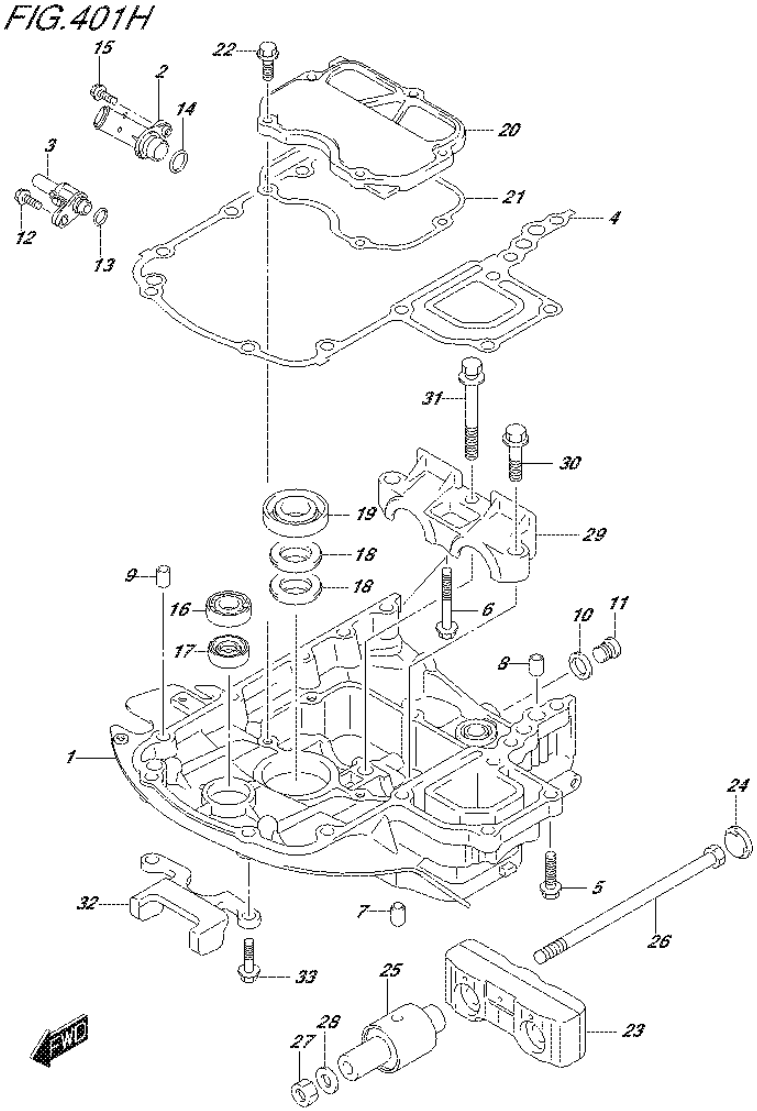

FIG.401H (2-D-2) ENGINE HOLDER (DF90A E40)

REF NO.	PART NO.	DESCRIPTION	Q'TY	REMARKS
29-1	54137-87L00-0EP	COVER, UPPER MOUNT (BLACK)	1	
29-2	54137-87L00-Y5S	COVER, UPPER MOUNT (WHITE)	1	
30	09116-10176	BOLT (10X44)	2	
31	09116-10147	BOLT (10X85)	1	
32	54140-87L10	STOPPER, UPPER UNIT	1	
33	09116-08137	BOLT (8X22)	2	

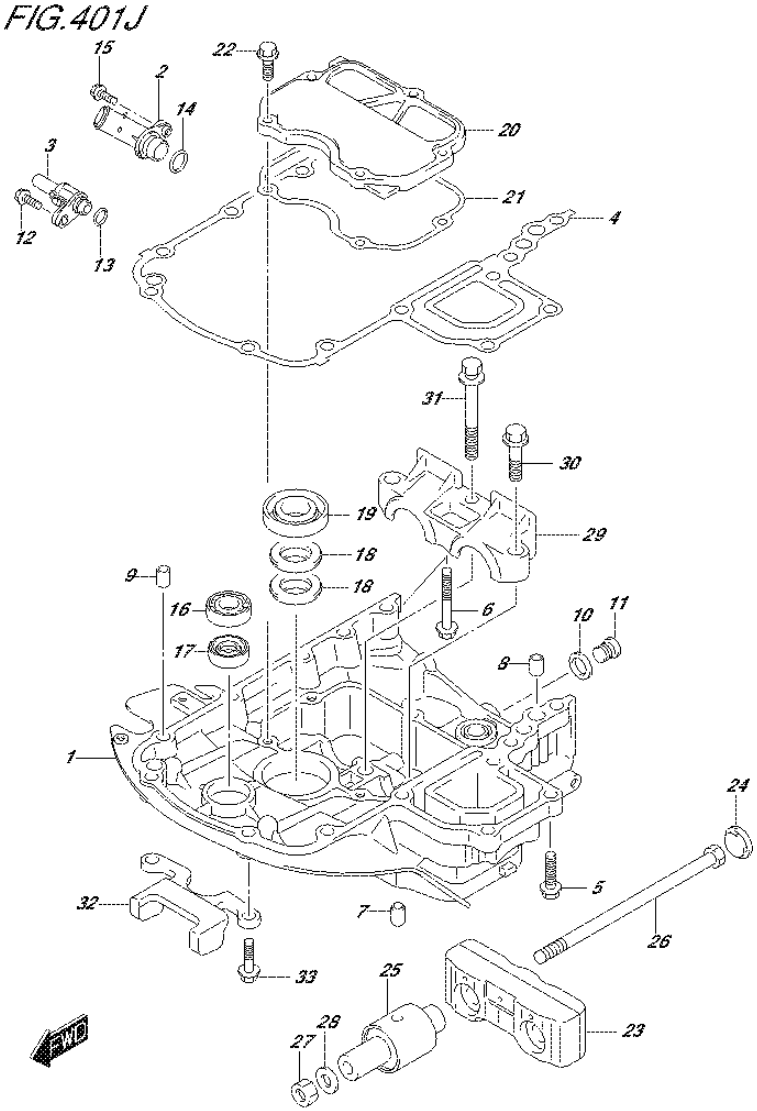

FIG.401J (2-D-3) ENGINE HOLDER (DF90ATH E01)

REF NO.	PART NO.	DESCRIPTION	Q'TY	REMARKS
1	51111-87L00-0EP	HOLDER, ENGINE (BLACK)	1	
2	51115-87L00	UNION, WATER RETURN	1	
3	51117-87L00	UNION, WATER INDICATOR	1	
4	51211-87L10	GASKET, ENGINE HOLDER	1	
5	09116-08128	BOLT (8X40)	7	
6	09116-08159	BOLT (8X55)	1	
7	09202-08006	PIN (8X12)	2	
8	04211-11129	PIN	2	
9	04211-11129	PIN	1	
10	09160-18031	WASHER (18.5X28X2.6)	1	
11	09248-18010	PLUG (18X15)	1	
12	29116-93J00	BOLT, WATER INDICATOR UNION	1	
13	09280-11001	O RING (D:2.4,ID:10.8)	1	
14	09280-20002	O RING (D:3.1,ID:19.4)	1	
15	01550-06207	BOLT	1	
16	09262-17019	BEARING (17X35X8)	1	
17	09289-18001	OIL SEAL (18X30X8)	1	
18	09282-22007	OIL SEAL (22X36X6)	2	
19	12281-87J00	SEAL, DRIVEN GEAR	1	
20	51122-87L00	COVER, MOUNT CASE	1	
21	51123-87L00	GASKET, MOUNT CASE COVER	1	
22	01550-0825A	BOLT	5	
23	54120-87L10	MOUNT, UPPER THRUST	1	
24	54122-87L00	SPACER, UPPER THRUST MOUNT	2	
25	54130-87L00	MOUNT, UPPER	2	
26	54166-95J02	BOLT, UPPER MOUNT	2	
27	09159-12014	NUT	2	
28	09160-12110	WASHER (12.5X22X3)	2	
29	54137-87L00-0EP	COVER, UPPER MOUNT (BLACK)	1	
30	09116-10176	BOLT (10X44)	2	
31	09116-10147	BOLT (10X85)	1	
32	54140-87L10	STOPPER, UPPER UNIT	1	
33	09116-08137	BOLT (8X22)	2	

FIG.401K

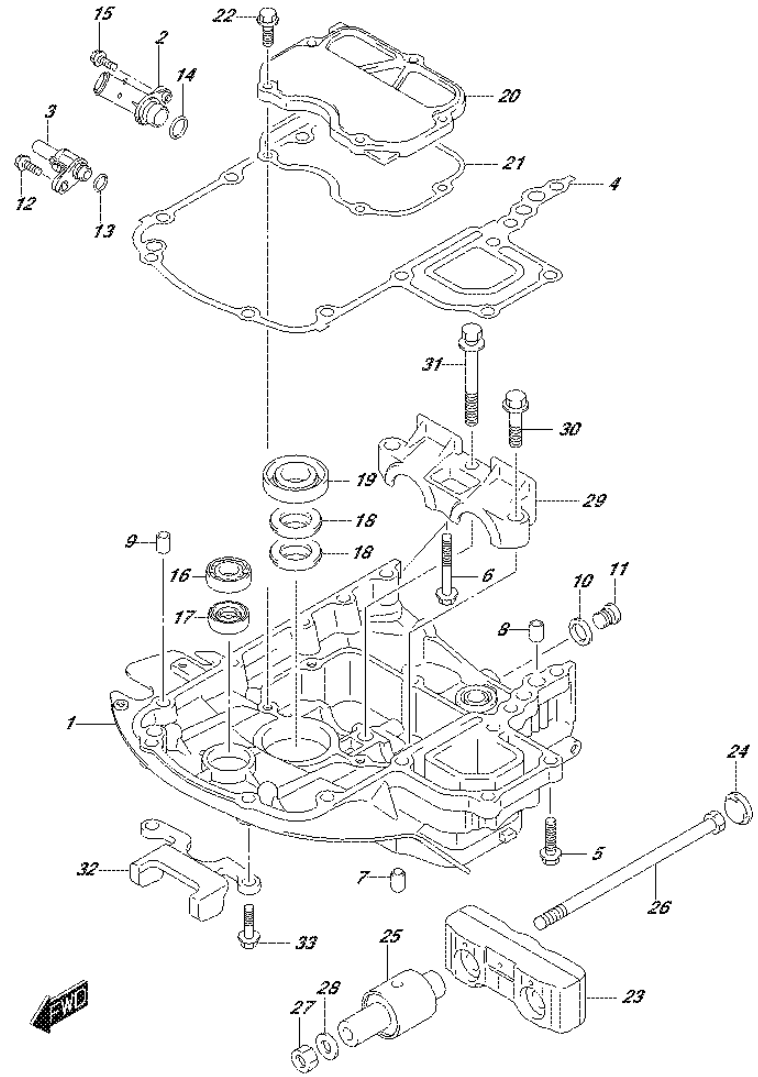

FIG.401K (2-D-4) ENGINE HOLDER (DF90ATH E40)

REF NO.	PART NO.	DESCRIPTION	Q'TY	REMARKS
1	51111-87L00-0EP	HOLDER, ENGINE (BLACK)	1	
2	51115-87L00	UNION, WATER RETURN	1	
3	51117-87L00	UNION, WATER INDICATOR	1	
4	51211-87L10	GASKET, ENGINE HOLDER	1	
5	09116-08128	BOLT (8X40)	7	
6	09116-08159	BOLT (8X55)	1	
7	09202-08006	PIN (8X12)	2	
8	04211-11129	PIN	2	
9	04211-11129	PIN	1	
10	09160-18031	WASHER (18.5X28X2.6)	1	
11	09248-18010	PLUG (18X15)	1	
12	29116-93J00	BOLT, WATER INDICATOR UNION	1	
13	09280-11001	O RING (D:2.4,ID:10.8)	1	
14	09280-20002	O RING (D:3.1,ID:19.4)	1	
15	01550-06207	BOLT	1	
16	09262-17019	BEARING (17X35X8)	1	
17	09289-18001	OIL SEAL (18X30X8)	1	
18	09282-22007	OIL SEAL (22X36X6)	2	
19	12281-87J00	SEAL, DRIVEN GEAR	1	
20	51122-87L00	COVER, MOUNT CASE	1	
21	51123-87L00	GASKET, MOUNT CASE COVER	1	
22	01550-0825A	BOLT	5	
23	54120-87L10	MOUNT, UPPER THRUST	1	
24	54122-87L00	SPACER, UPPER THRUST MOUNT	2	
25	54130-87L00	MOUNT, UPPER	2	
26	54166-95J02	BOLT, UPPER MOUNT	2	
27	09159-12014	NUT	2	
28	09160-12110	WASHER (12.5X22X3)	2	
29	54137-87L00-0EP	COVER, UPPER MOUNT (BLACK)	1	
30	09116-10176	BOLT (10X44)	2	
31	09116-10147	BOLT (10X85)	1	
32	54140-87L10	STOPPER, UPPER UNIT	1	
33	09116-08137	BOLT (8X22)	2	

FIG.405A

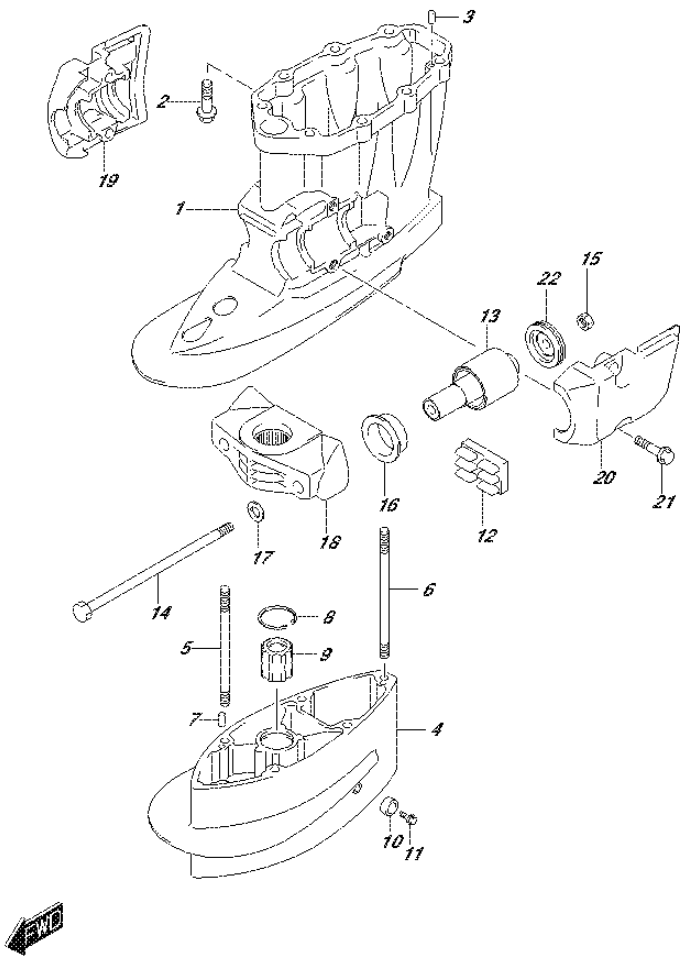

FIG.405A (2-D-5) DRIVE SHAFT HOUSING (DF70A E01)

REF NO.	PART NO.	DESCRIPTION	Q'TY	REMARKS
1-1	52111-87L00-0EP	HOUSING, DRIVE SHAFT (BLACK)	1	
1-2	52111-87L00-Y5S	HOUSING, DRIVE SHAFT (WHITE)	1	
2	09116-10176	BOLT (10X44)	8	
3	09202-08006	PIN (8X12)	2	
4-1	52131-87L00-0EP	CASE, EXTENSION (BLACK)	1	W/TRANSOM(X)
4-2	52131-87L00-Y5S	CASE, EXTENSION (WHITE)	1	W/TRANSOM(X)
5	09108-10115	STUD BOLT	4	W/TRANSOM(X)
6	09108-10157	STUD BOLT	1	W/TRANSOM(X)
7	09202-08006	PIN (8X12)	2	W/TRANSOM(X)
8	09381-40005	CIRCLIP	1	W/TRANSOM(X)
9	57130-87E02	BUSH, DRIVE SHAFT	1	W/TRANSOM(X)
10	55321-87J00	ANODE, PROTECTION	1	W/TRANSOM(X)
11	09103-06281	BOLT (6X14)	1	W/TRANSOM(X)
12	54151-87L00	MOUNT, LOWER THRUST	1	
13	54160-87L10	MOUNT, LOWER	2	
14	54166-95J02	BOLT, LOWER MOUNT	2	
15	09159-12014	NUT	2	
16	54167-87L10	MOUNT, FWD LOWER SIDE	2	
17	54114-90J01	WASHER, LOWER MOUNT BOLT	2	
18-1	54211-90J01-0EP	BRACKET, LOWER MOUNT (BLACK)	1	
18-2	54211-90J01-Y5S	BRACKET, LOWER MOUNT (WHITE)	1	
19-1	54221-87L00-0EP	COVER, LOWER MOUNT STBD (BLACK)	1	
19-2	54221-87L00-Y5S	COVER, LOWER MOUNT STBD (WHITE)	1	
20-1	54231-87L00-0EP	COVER, LOWER MOUNT PORT (BLACK)	1	
20-2	54231-87L00-Y5S	COVER, LOWER MOUNT PORT (WHITE)	1	
21	09116-10176	BOLT (10X44)	4	
22	54180-88L00	DAMPER, FWD STOPPER	2	

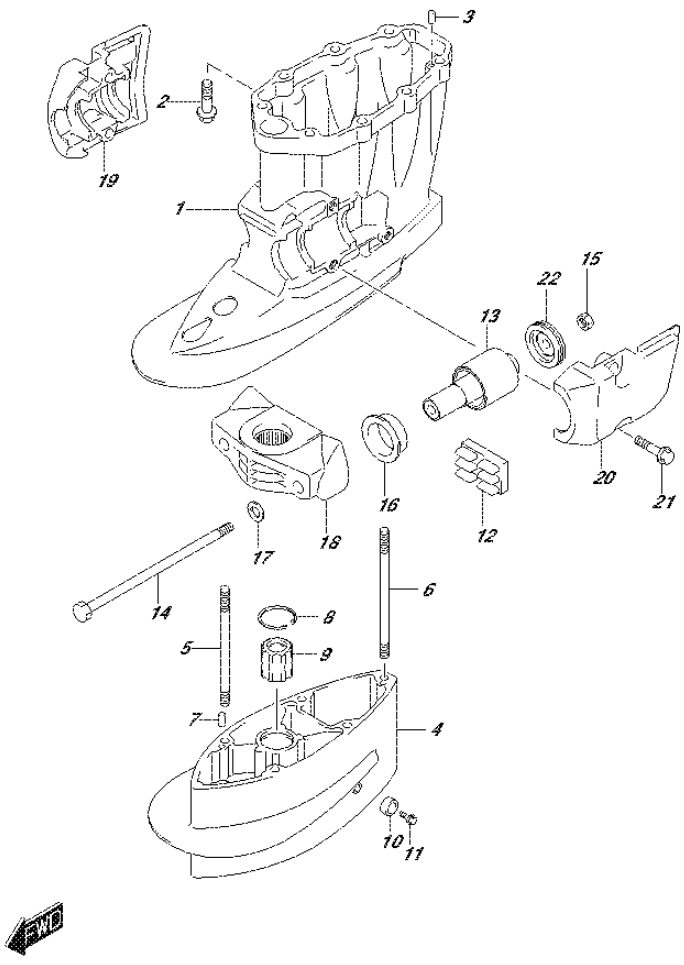

FIG.405B (2-D-6) DRIVE SHAFT HOUSING (DF70A E40)

REF NO.	PART NO.	DESCRIPTION	Q'TY	REMARKS
1-1	52111-87L00-0EP	HOUSING, DRIVE SHAFT (BLACK)	1	
1-2	52111-87L00-Y5S	HOUSING, DRIVE SHAFT (WHITE)	1	
2	09116-10176	BOLT (10X44)	8	
3	09202-08006	PIN (8X12)	2	
4-1	52131-87L00-0EP	CASE, EXTENSION (BLACK)	1	W/TRANSOM(X)
4-2	52131-87L00-Y5S	CASE, EXTENSION (WHITE)	1	W/TRANSOM(X)
5	09108-10115	STUD BOLT	4	W/TRANSOM(X)
6	09108-10157	STUD BOLT	1	W/TRANSOM(X)
7	09202-08006	PIN (8X12)	2	W/TRANSOM(X)
8	09381-40005	CIRCLIP	1	W/TRANSOM(X)
9	57130-87E02	BUSH, DRIVE SHAFT	1	W/TRANSOM(X)
10	55321-87J00	ANODE, PROTECTION	1	W/TRANSOM(X)
11	09103-06281	BOLT (6X14)	1	W/TRANSOM(X)
12	54151-87L00	MOUNT, LOWER THRUST	1	
13	54160-87L10	MOUNT, LOWER	2	
14	54166-95J02	BOLT, LOWER MOUNT	2	
15	09159-12014	NUT	2	
16	54167-87L10	MOUNT, FWD LOWER SIDE	2	
17	54114-90J01	WASHER, LOWER MOUNT BOLT	2	
18-1	54211-90J01-0EP	BRACKET, LOWER MOUNT (BLACK)	1	
18-2	54211-90J01-Y5S	BRACKET, LOWER MOUNT (WHITE)	1	
19-1	54221-87L00-0EP	COVER, LOWER MOUNT STBD (BLACK)	1	
19-2	54221-87L00-Y5S	COVER, LOWER MOUNT STBD (WHITE)	1	
20-1	54231-87L00-0EP	COVER, LOWER MOUNT PORT (BLACK)	1	
20-2	54231-87L00-Y5S	COVER, LOWER MOUNT PORT (WHITE)	1	
21	09116-10176	BOLT (10X44)	4	
22	54180-88L00	DAMPER, FWD STOPPER	2	

FIG.405C

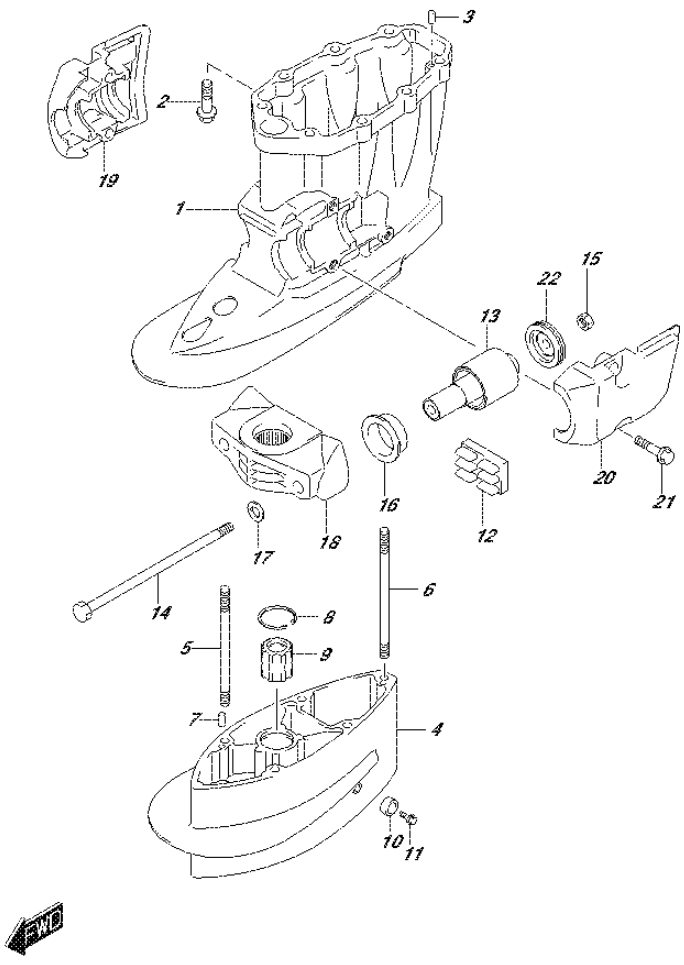

FIG.405C (2-D-7) DRIVE SHAFT HOUSING (DF70ATH E01)

REF NO.	PART NO.	DESCRIPTION	Q'TY	REMARKS
1	52111-87L00-0EP	HOUSING, DRIVE SHAFT (BLACK)	1	
2	09116-10176	BOLT (10X44)	8	
3	09202-08006	PIN (8X12)	2	
4	52131-87L00-0EP	CASE, EXTENSION (BLACK)	1	W/TRANSOM(X)
5	09108-10115	STUD BOLT	4	W/TRANSOM(X)
6	09108-10157	STUD BOLT	1	W/TRANSOM(X)
7	09202-08006	PIN (8X12)	2	W/TRANSOM(X)
8	09381-40005	CIRCLIP	1	W/TRANSOM(X)
9	57130-87E02	BUSH, DRIVE SHAFT	1	W/TRANSOM(X)
10	55321-87J00	ANODE, PROTECTION	1	W/TRANSOM(X)
11	09103-06281	BOLT (6X14)	1	W/TRANSOM(X)
12	54151-87L00	MOUNT, LOWER THRUST	1	
13	54160-87L10	MOUNT, LOWER	2	
14	54166-95J02	BOLT, LOWER MOUNT	2	
15	09159-12014	NUT	2	
16	54167-87L10	MOUNT, FWD LOWER SIDE	2	
17	54114-90J01	WASHER, LOWER MOUNT BOLT	2	
18	54211-90J01-0EP	BRACKET, LOWER MOUNT (BLACK)	1	
19	54221-87L00-0EP	COVER, LOWER MOUNT STBD (BLACK)	1	
20	54231-87L00-0EP	COVER, LOWER MOUNT PORT (BLACK)	1	
21	09116-10176	BOLT (10X44)	4	
22	54180-88L00	DAMPER, FWD STOPPER	2	

FIG.405D

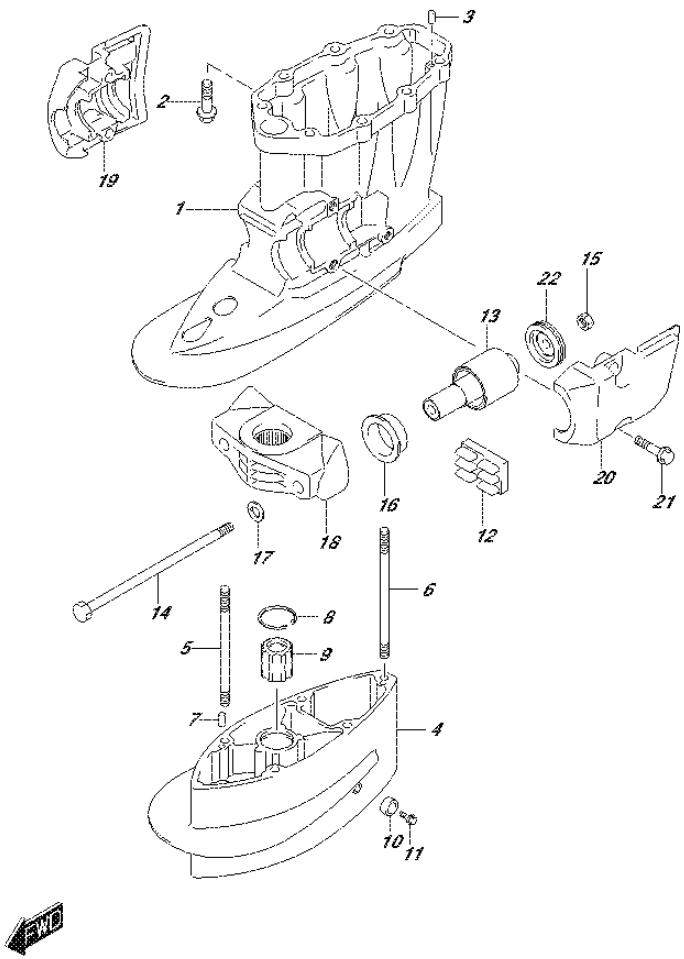

FIG.405D (2-D-8) DRIVE SHAFT HOUSING (DF70ATH E40)

REF NO.	PART NO.	DESCRIPTION	Q'TY	REMARKS
1	52111-87L00-0EP	HOUSING, DRIVE SHAFT (BLACK)	1	
2	09116-10176	BOLT (10X44)	8	
3	09202-08006	PIN (8X12)	2	
4	52131-87L00-0EP	CASE, EXTENSION (BLACK)	1	W/TRANSOM(X)
5	09108-10115	STUD BOLT	4	W/TRANSOM(X)
6	09108-10157	STUD BOLT	1	W/TRANSOM(X)
7	09202-08006	PIN (8X12)	2	W/TRANSOM(X)
8	09381-40005	CIRCLIP	1	W/TRANSOM(X)
9	57130-87E02	BUSH, DRIVE SHAFT	1	W/TRANSOM(X)
10	55321-87J00	ANODE, PROTECTION	1	W/TRANSOM(X)
11	09103-06281	BOLT (6X14)	1	W/TRANSOM(X)
12	54151-87L00	MOUNT, LOWER THRUST	1	
13	54160-87L10	MOUNT, LOWER	2	
14	54166-95J02	BOLT, LOWER MOUNT	2	
15	09159-12014	NUT	2	
16	54167-87L10	MOUNT, FWD LOWER SIDE	2	
17	54114-90J01	WASHER, LOWER MOUNT BOLT	2	
18	54211-90J01-0EP	BRACKET, LOWER MOUNT (BLACK)	1	
19	54221-87L00-0EP	COVER, LOWER MOUNT STBD (BLACK)	1	
20	54231-87L00-0EP	COVER, LOWER MOUNT PORT (BLACK)	1	
21	09116-10176	BOLT (10X44)	4	
22	54180-88L00	DAMPER, FWD STOPPER	2	

FIG.405E

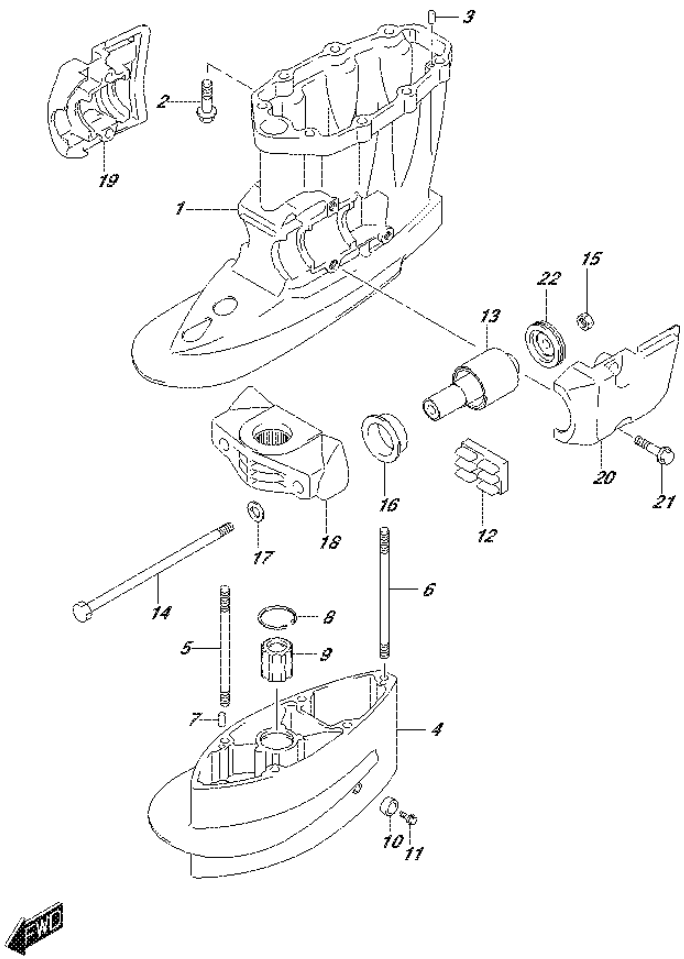

FIG.405E (2-D-9) DRIVE SHAFT HOUSING (DF80A E01)

REF NO.	PART NO.	DESCRIPTION	Q'TY	REMARKS
1	52111-87L00-0EP	HOUSING, DRIVE SHAFT (BLACK)	1	
2	09116-10176	BOLT (10X44)	8	
3	09202-08006	PIN (8X12)	2	
4	52131-87L00-0EP	CASE, EXTENSION (BLACK)	1	W/TRANSOM(X)
5	09108-10115	STUD BOLT	4	W/TRANSOM(X)
6	09108-10157	STUD BOLT	1	W/TRANSOM(X)
7	09202-08006	PIN (8X12)	2	W/TRANSOM(X)
8	09381-40005	CIRCLIP	1	W/TRANSOM(X)
9	57130-87E02	BUSH, DRIVE SHAFT	1	W/TRANSOM(X)
10	55321-87J00	ANODE, PROTECTION	1	W/TRANSOM(X)
11	09103-06281	BOLT (6X14)	1	W/TRANSOM(X)
12	54151-87L00	MOUNT, LOWER THRUST	1	
13	54160-87L10	MOUNT, LOWER	2	
14	54166-95J02	BOLT, LOWER MOUNT	2	
15	09159-12014	NUT	2	
16	54167-87L10	MOUNT, FWD LOWER SIDE	2	
17	54114-90J01	WASHER, LOWER MOUNT BOLT	2	
18	54211-90J01-0EP	BRACKET, LOWER MOUNT (BLACK)	1	
19	54221-87L00-0EP	COVER, LOWER MOUNT STBD (BLACK)	1	
20	54231-87L00-0EP	COVER, LOWER MOUNT PORT (BLACK)	1	
21	09116-10176	BOLT (10X44)	4	
22	54180-88L00	DAMPER, FWD STOPPER	2	

FIG.405F

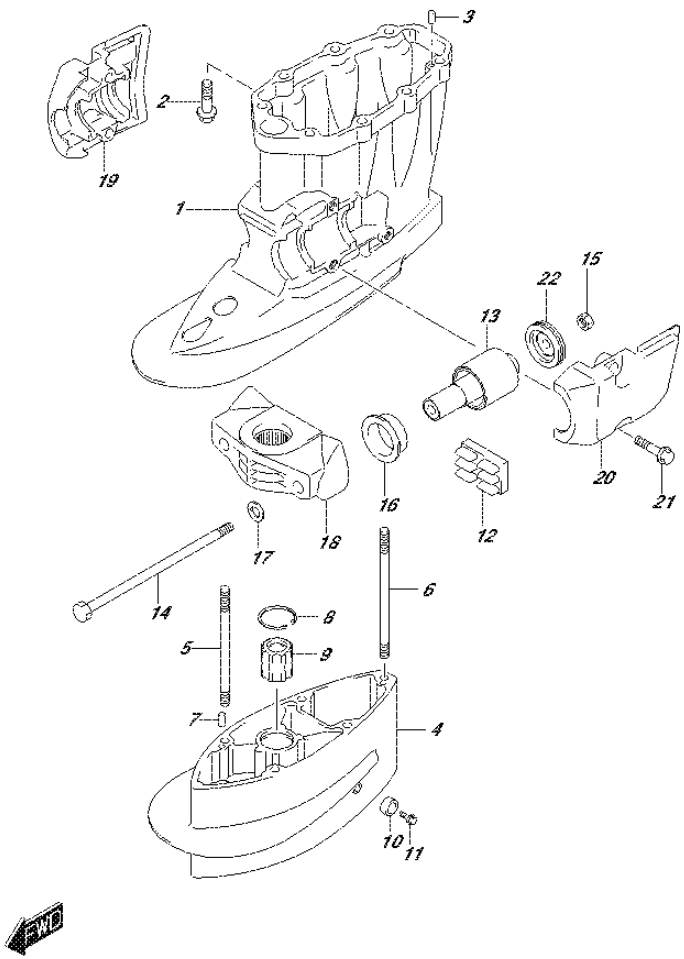

FIG.405F (2-D-10) DRIVE SHAFT HOUSING (DF80A E40)

REF NO.	PART NO.	DESCRIPTION	Q'TY	REMARKS
1	52111-87L00-0EP	HOUSING, DRIVE SHAFT (BLACK)	1	
2	09116-10176	BOLT (10X44)	8	
3	09202-08006	PIN (8X12)	2	
4	52131-87L00-0EP	CASE, EXTENSION (BLACK)	1	W/TRANSOM(X)
5	09108-10115	STUD BOLT	4	W/TRANSOM(X)
6	09108-10157	STUD BOLT	1	W/TRANSOM(X)
7	09202-08006	PIN (8X12)	2	W/TRANSOM(X)
8	09381-40005	CIRCLIP	1	W/TRANSOM(X)
9	57130-87E02	BUSH, DRIVE SHAFT	1	W/TRANSOM(X)
10	55321-87J00	ANODE, PROTECTION	1	W/TRANSOM(X)
11	09103-06281	BOLT (6X14)	1	W/TRANSOM(X)
12	54151-87L00	MOUNT, LOWER THRUST	1	
13	54160-87L10	MOUNT, LOWER	2	
14	54166-95J02	BOLT, LOWER MOUNT	2	
15	09159-12014	NUT	2	
16	54167-87L10	MOUNT, FWD LOWER SIDE	2	
17	54114-90J01	WASHER, LOWER MOUNT BOLT	2	
18	54211-90J01-0EP	BRACKET, LOWER MOUNT (BLACK)	1	
19	54221-87L00-0EP	COVER, LOWER MOUNT STBD (BLACK)	1	
20	54231-87L00-0EP	COVER, LOWER MOUNT PORT (BLACK)	1	
21	09116-10176	BOLT (10X44)	4	
22	54180-88L00	DAMPER, FWD STOPPER	2	

FIG.405G

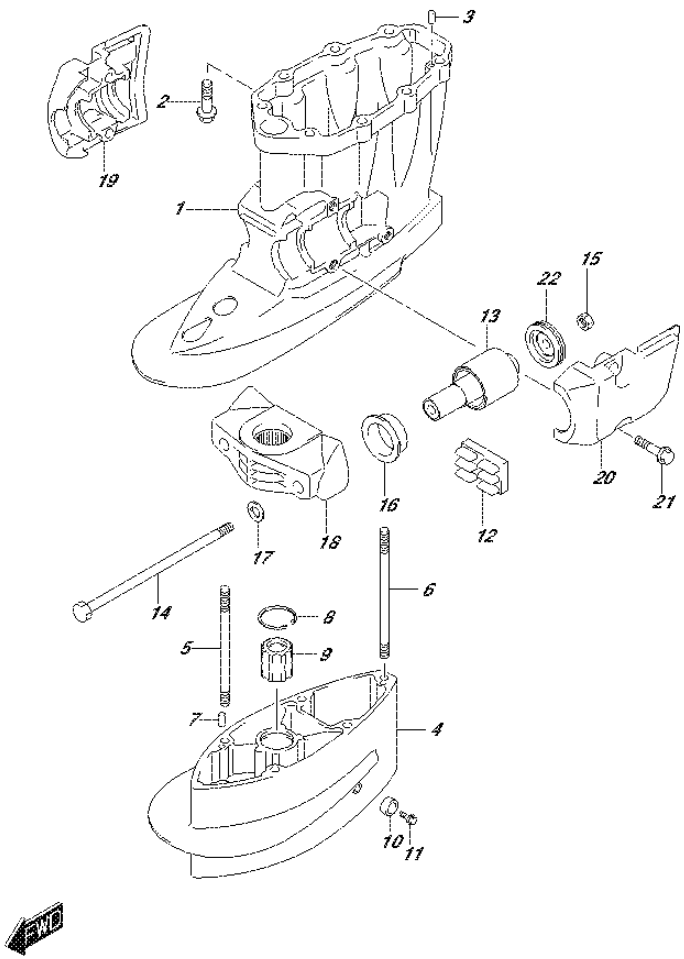

FIG.405G (2-D-11) DRIVE SHAFT HOUSING (DF90A E01)

REF NO.	PART NO.	DESCRIPTION	Q'TY	REMARKS
1-1	52111-87L00-0EP	HOUSING, DRIVE SHAFT (BLACK)	1	
1-2	52111-87L00-Y5S	HOUSING, DRIVE SHAFT (WHITE)	1	
2	09116-10176	BOLT (10X44)	8	
3	09202-08006	PIN (8X12)	2	
4-1	52131-87L00-0EP	CASE, EXTENSION (BLACK)	1	W/TRANSOM(X)
4-2	52131-87L00-Y5S	CASE, EXTENSION (WHITE)	1	W/TRANSOM(X)
5	09108-10115	STUD BOLT	4	W/TRANSOM(X)
6	09108-10157	STUD BOLT	1	W/TRANSOM(X)
7	09202-08006	PIN (8X12)	2	W/TRANSOM(X)
8	09381-40005	CIRCLIP	1	W/TRANSOM(X)
9	57130-87E02	BUSH, DRIVE SHAFT	1	W/TRANSOM(X)
10	55321-87J00	ANODE, PROTECTION	1	W/TRANSOM(X)
11	09103-06281	BOLT (6X14)	1	W/TRANSOM(X)
12	54151-87L00	MOUNT, LOWER THRUST	1	
13	54160-87L10	MOUNT, LOWER	2	
14	54166-95J02	BOLT, LOWER MOUNT	2	
15	09159-12014	NUT	2	
16	54167-87L10	MOUNT, FWD LOWER SIDE	2	
17	54114-90J01	WASHER, LOWER MOUNT BOLT	2	
18-1	54211-90J01-0EP	BRACKET, LOWER MOUNT (BLACK)	1	
18-2	54211-90J01-Y5S	BRACKET, LOWER MOUNT (WHITE)	1	
19-1	54221-87L00-0EP	COVER, LOWER MOUNT STBD (BLACK)	1	
19-2	54221-87L00-Y5S	COVER, LOWER MOUNT STBD (WHITE)	1	
20-1	54231-87L00-0EP	COVER, LOWER MOUNT PORT (BLACK)	1	
20-2	54231-87L00-Y5S	COVER, LOWER MOUNT PORT (WHITE)	1	
21	09116-10176	BOLT (10X44)	4	
22	54180-88L00	DAMPER, FWD STOPPER	2	

FIG.405H

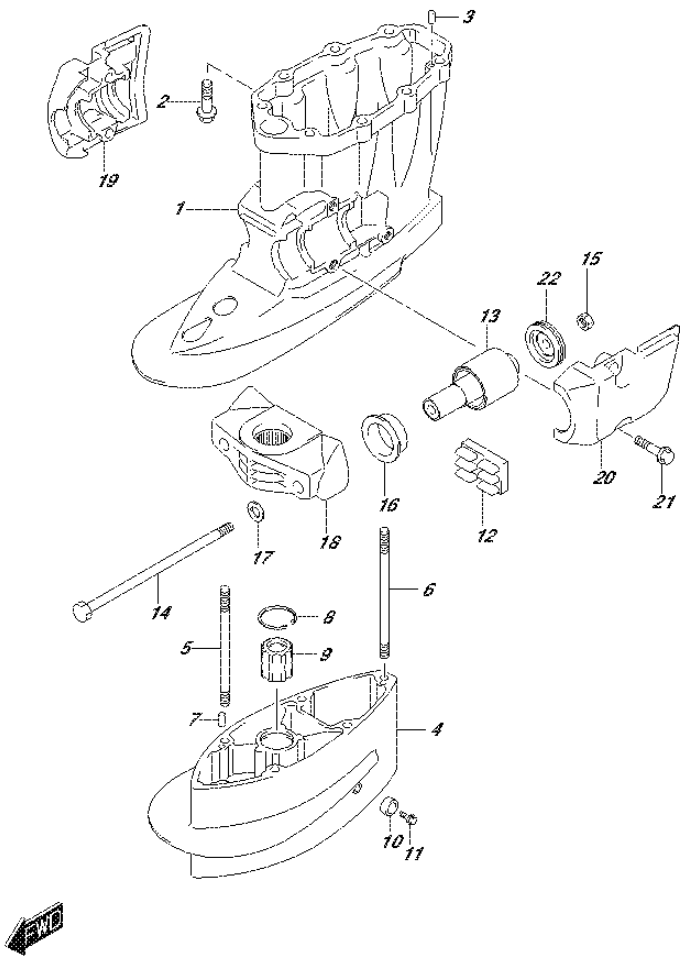

FIG.405H (2-D-12) DRIVE SHAFT HOUSING (DF90A E40)

REF NO.	PART NO.	DESCRIPTION	Q'TY	REMARKS
1-1	52111-87L00-0EP	HOUSING, DRIVE SHAFT (BLACK)	1	
1-2	52111-87L00-Y5S	HOUSING, DRIVE SHAFT (WHITE)	1	
2	09116-10176	BOLT (10X44)	8	
3	09202-08006	PIN (8X12)	2	
4-1	52131-87L00-0EP	CASE, EXTENSION (BLACK)	1	W/TRANSOM(X)
4-2	52131-87L00-Y5S	CASE, EXTENSION (WHITE)	1	W/TRANSOM(X)
5	09108-10115	STUD BOLT	4	W/TRANSOM(X)
6	09108-10157	STUD BOLT	1	W/TRANSOM(X)
7	09202-08006	PIN (8X12)	2	W/TRANSOM(X)
8	09381-40005	CIRCLIP	1	W/TRANSOM(X)
9	57130-87E02	BUSH, DRIVE SHAFT	1	W/TRANSOM(X)
10	55321-87J00	ANODE, PROTECTION	1	W/TRANSOM(X)
11	09103-06281	BOLT (6X14)	1	W/TRANSOM(X)
12	54151-87L00	MOUNT, LOWER THRUST	1	
13	54160-87L10	MOUNT, LOWER	2	
14	54166-95J02	BOLT, LOWER MOUNT	2	
15	09159-12014	NUT	2	
16	54167-87L10	MOUNT, FWD LOWER SIDE	2	
17	54114-90J01	WASHER, LOWER MOUNT BOLT	2	
18-1	54211-90J01-0EP	BRACKET, LOWER MOUNT (BLACK)	1	
18-2	54211-90J01-Y5S	BRACKET, LOWER MOUNT (WHITE)	1	
19-1	54221-87L00-0EP	COVER, LOWER MOUNT STBD (BLACK)	1	
19-2	54221-87L00-Y5S	COVER, LOWER MOUNT STBD (WHITE)	1	
20-1	54231-87L00-0EP	COVER, LOWER MOUNT PORT (BLACK)	1	
20-2	54231-87L00-Y5S	COVER, LOWER MOUNT PORT (WHITE)	1	
21	09116-10176	BOLT (10X44)	4	
22	54180-88L00	DAMPER, FWD STOPPER	2	

FIG.405J

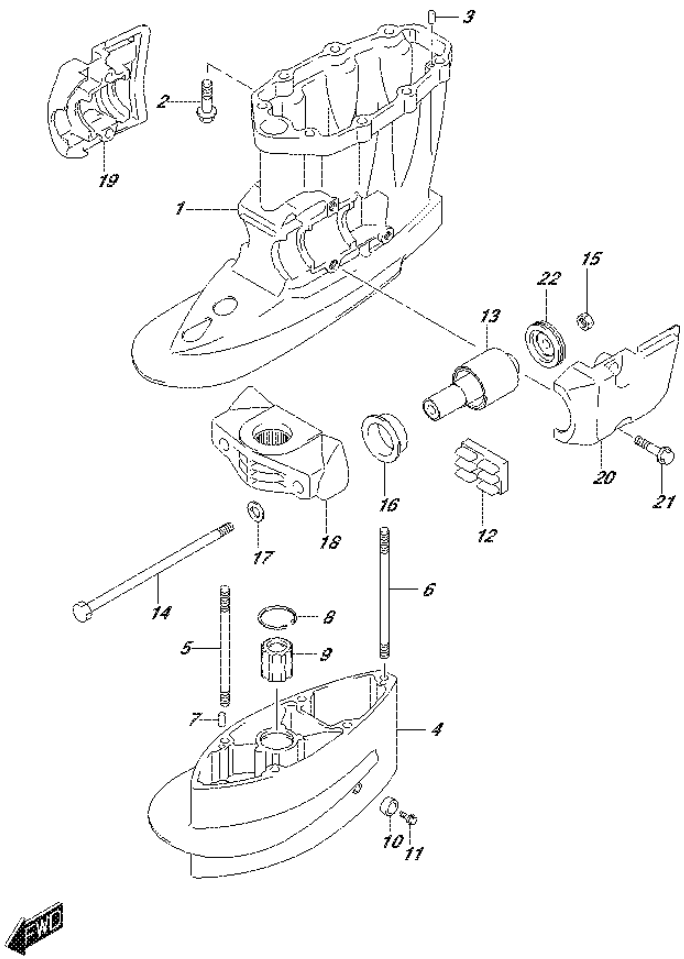

FIG.405J (2-D-13) DRIVE SHAFT HOUSING (DF90ATH E01)

REF NO.	PART NO.	DESCRIPTION	Q'TY	REMARKS
1	52111-87L00-0EP	HOUSING, DRIVE SHAFT (BLACK)	1	
2	09116-10176	BOLT (10X44)	8	
3	09202-08006	PIN (8X12)	2	
4	52131-87L00-0EP	CASE, EXTENSION (BLACK)	1	W/TRANSOM(X)
5	09108-10115	STUD BOLT	4	W/TRANSOM(X)
6	09108-10157	STUD BOLT	1	W/TRANSOM(X)
7	09202-08006	PIN (8X12)	2	W/TRANSOM(X)
8	09381-40005	CIRCLIP	1	W/TRANSOM(X)
9	57130-87E02	BUSH, DRIVE SHAFT	1	W/TRANSOM(X)
10	55321-87J00	ANODE, PROTECTION	1	W/TRANSOM(X)
11	09103-06281	BOLT (6X14)	1	W/TRANSOM(X)
12	54151-87L00	MOUNT, LOWER THRUST	1	
13	54160-87L10	MOUNT, LOWER	2	
14	54166-95J02	BOLT, LOWER MOUNT	2	
15	09159-12014	NUT	2	
16	54167-87L10	MOUNT, FWD LOWER SIDE	2	
17	54114-90J01	WASHER, LOWER MOUNT BOLT	2	
18	54211-90J01-0EP	BRACKET, LOWER MOUNT (BLACK)	1	
19	54221-87L00-0EP	COVER, LOWER MOUNT STBD (BLACK)	1	
20	54231-87L00-0EP	COVER, LOWER MOUNT PORT (BLACK)	1	
21	09116-10176	BOLT (10X44)	4	
22	54180-88L00	DAMPER, FWD STOPPER	2	

FIG.405K

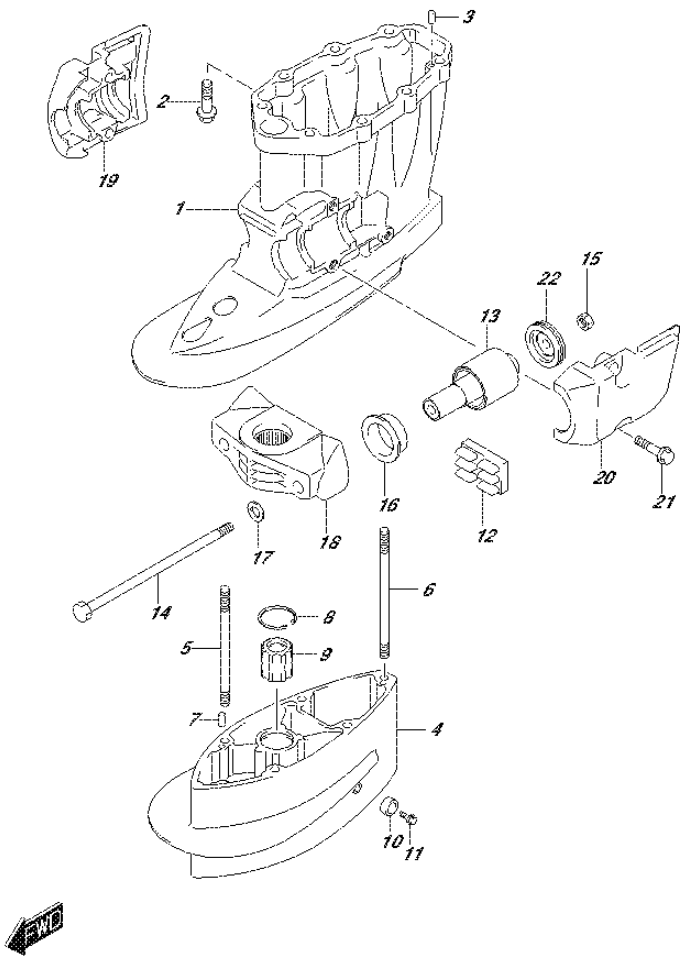

FIG.405K (2-D-14) DRIVE SHAFT HOUSING (DF90ATH E40)

REF NO.	PART NO.	DESCRIPTION	Q'TY	REMARKS
1	52111-87L00-0EP	HOUSING, DRIVE SHAFT (BLACK)	1	
2	09116-10176	BOLT (10X44)	8	
3	09202-08006	PIN (8X12)	2	
4	52131-87L00-0EP	CASE, EXTENSION (BLACK)	1	W/TRANSOM(X)
5	09108-10115	STUD BOLT	4	W/TRANSOM(X)
6	09108-10157	STUD BOLT	1	W/TRANSOM(X)
7	09202-08006	PIN (8X12)	2	W/TRANSOM(X)
8	09381-40005	CIRCLIP	1	W/TRANSOM(X)
9	57130-87E02	BUSH, DRIVE SHAFT	1	W/TRANSOM(X)
10	55321-87J00	ANODE, PROTECTION	1	W/TRANSOM(X)
11	09103-06281	BOLT (6X14)	1	W/TRANSOM(X)
12	54151-87L00	MOUNT, LOWER THRUST	1	
13	54160-87L10	MOUNT, LOWER	2	
14	54166-95J02	BOLT, LOWER MOUNT	2	
15	09159-12014	NUT	2	
16	54167-87L10	MOUNT, FWD LOWER SIDE	2	
17	54114-90J01	WASHER, LOWER MOUNT BOLT	2	
18	54211-90J01-0EP	BRACKET, LOWER MOUNT (BLACK)	1	
19	54221-87L00-0EP	COVER, LOWER MOUNT STBD (BLACK)	1	
20	54231-87L00-0EP	COVER, LOWER MOUNT PORT (BLACK)	1	
21	09116-10176	BOLT (10X44)	4	
22	54180-88L00	DAMPER, FWD STOPPER	2	

FIG.407A

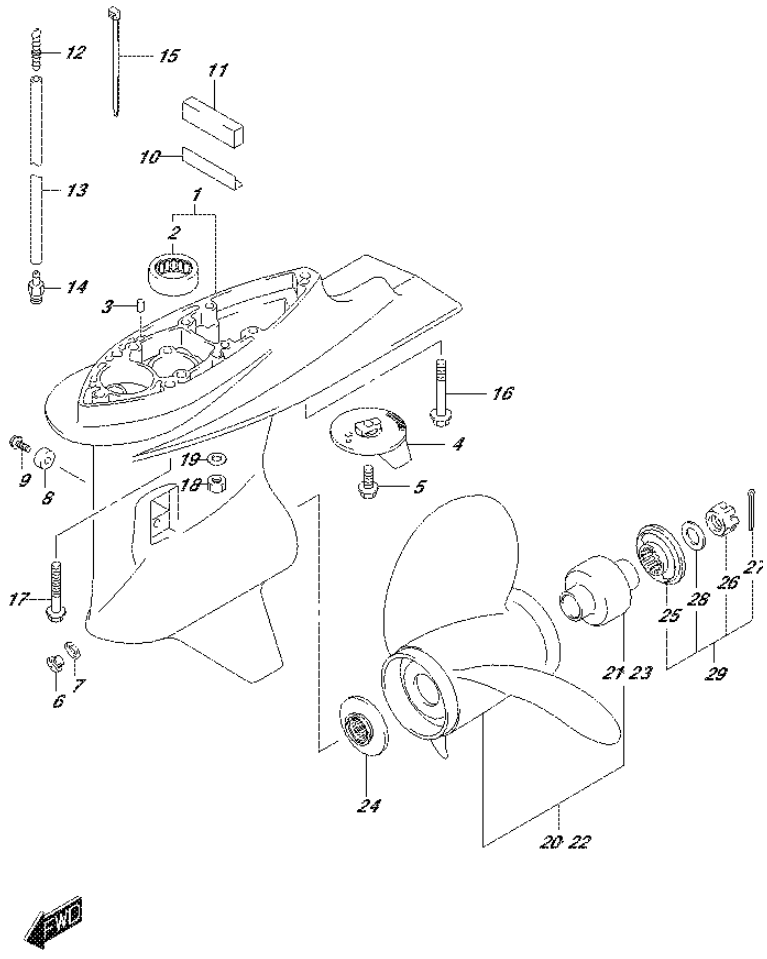

FIG.407A (2-D-15) GEAR CASE (DF70A E01)

REF NO.	PART NO.	DESCRIPTION	Q'TY	REMARKS
1-1	55110-87L30-0EP	CASE, GEAR (BLACK)	1	
1-2	55110-87L30-Y5S	CASE, GEAR (WHITE)	1	
2	09263-26023	.BEARING (26X34X30)	1	
3	09202-08006	PIN (8X12)	2	
4	55125-90J01	TAB, TRIM	1	
5	09116-08137	BOLT (8X22)	1	
6	09248-10008	PLUG (10X7.5)	2	
7	09168-10034	GASKET (9.5X16.5X2)	2	
8-1	55321-87J00	ANODE, PROTECTION	1	
8-2	55321-87J10	ANODE (MAGNESIUM)	1	OPT
9	09103-06281	BOLT (6X14)	1	
10	55333-87L00	PLATE, EXHAUST SEAL	1	
11	52332-87L10	SEAL, EXH TUBE HOUSING	1	
12	55127-87D00	UNION, SPEEDOMETER HOSE	1	
13	09355-40805-00B	HOSE (4X8X2000)	1	L:2000->1500
14	09362-09008	UNION	1	
15	09407-10404	CLAMP (L:100)	2	
16	09116-10137	BOLT (10X70)	1	W/TRANSOM(L)
17	09116-10150	BOLT (10X55)	4	W/TRANSOM(L)
18	29141-93J20	NUT, EXTENSION BOLT	5	W/TRANSOM(X)
19	09160-10141	WASHER (10.5X19X2)	5	W/TRANSOM(X)
20-1	58100-87LA0-019	PROPELLER (3X14X13)	1	
20-2	58100-87LB0-019	PROPELLER (3X13.875X15)	1	
20-3	58100-87LC0-019	PROPELLER (3X13.75X17)	1	
20-4	58100-87LD0-019	PROPELLER (3X13.75X19)	1	
20-5	58100-87LE0-019	PROPELLER (3X13.75X21)	1	
20-6	58100-87LF0-019	PROPELLER (3X13.75X23)	1	
20-7	58100-90JA0-019	PROPELLER (3X14X17)	1	OPT
20-8	58100-90JB0-019	PROPELLER (3X14X19)	1	OPT
20-9	58100-90JC0-019	PROPELLER (3X14X21)	1	OPT
20-10	58100-90JD0-019	PROPELLER (3X14X23)	1	OPT
20-11	58100-90JE0-019	PROPELLER (3X13.5X15)	1	OPT

FIG.407A

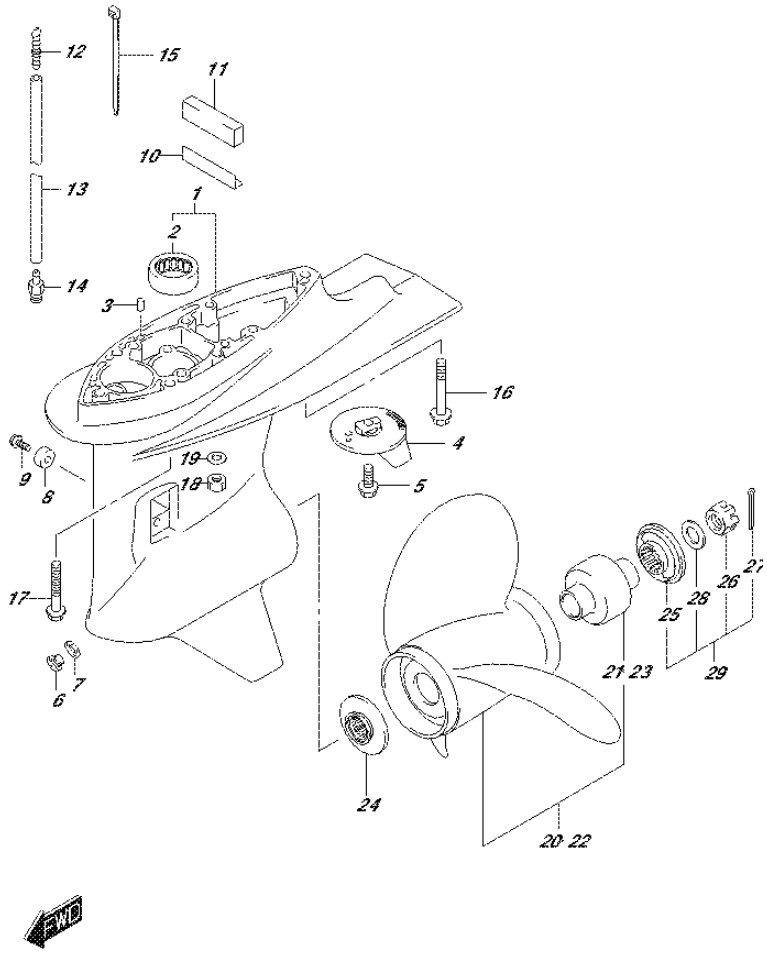

FIG.407A (2-E-2) GEAR CASE (DF70A E01)

REF NO.	PART NO.	DESCRIPTION	Q'TY	REMARKS
20-12	58200-92J40	PROPELLER (3X13.875X15)	1	OPT
				SUS
20-13	58200-92J50	PROPELLER (3X13.875X17)	1	OPT
				SUS
20-14	58200-92J60	PROPELLER (3X13.875X19)	1	OPT
				SUS
20-15	58200-92J70	PROPELLER (3X13.875X21)	1	OPT
				SUS
20-16	58200-92J80	PROPELLER (3X13.875X23)	1	OPT
				SUS
20-17	58200-92J90	PROPELLER (3X13.875X25)	1	OPT
				SUS
21	58105-90J00	.BUSH	1	
22-1	58200-90J00	PROPELLER (3X14.25X18)	1	OPT
				SUS
22-2	58200-90J10	PROPELLER (3X14.25X20)	1	OPT
				SUS
22-3	58200-90J20	PROPELLER (3X14.25X22)	1	OPT
				SUS
22-4	58200-90J30	PROPELLER (3X14.25X24)	1	OPT
				SUS
23	58120-90J00	.BUSH	1	OPT
24	57632-87L01	STOPPER, PROPELLER BUSH	1	
25	57633-90J02	SPACER, PROPELLER NUT	1	
26	09141-18005	NUT	1	
27	09204-03003	COTTER PIN (D:3.6,L:25)	1	
28	09160-18028	WASHER (18.5X31X1)	1	
29	57630-90J00	KIT, PROPELLER NUT	1	OPT
30	25700-87L00	SEALING KIT, GEAR CASE	1	OPT
				NOT ILLUSTRATED

FIG.407B

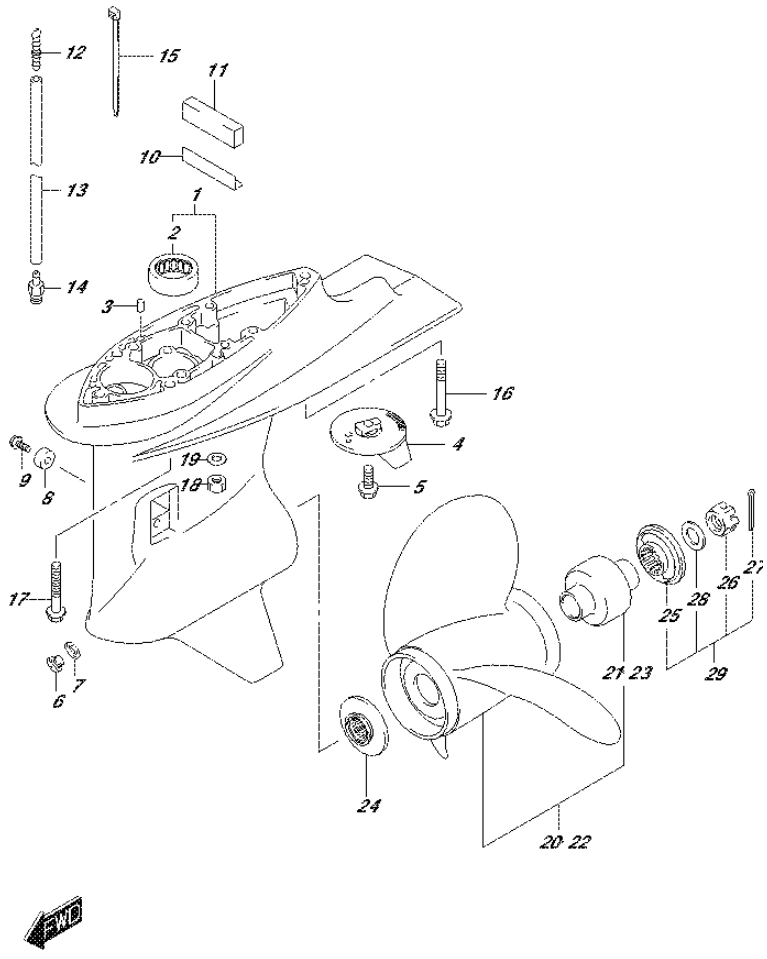

FIG.407B (2-E-3) GEAR CASE (DF70A E40)

REF NO.	PART NO.	DESCRIPTION	Q'TY	REMARKS
1-1	55110-87L30-0EP	CASE, GEAR (BLACK)	1	
1-2	55110-87L30-Y5S	CASE, GEAR (WHITE)	1	
2	09263-26023	.BEARING (26X34X30)	1	
3	09202-08006	PIN (8X12)	2	
4	55125-90J01	TAB, TRIM	1	
5	09116-08137	BOLT (8X22)	1	
6	09248-10008	PLUG (10X7.5)	2	
7	09168-10034	GASKET (9.5X16.5X2)	2	
8-1	55321-87J00	ANODE, PROTECTION	1	
8-2	55321-87J10	ANODE (MAGNESIUM)	1	OPT
9	09103-06281	BOLT (6X14)	1	
10	55333-87L00	PLATE, EXHAUST SEAL	1	
11	52332-87L10	SEAL, EXH TUBE HOUSING	1	
12	55127-87D00	UNION, SPEEDOMETER HOSE	1	
13	09355-40805-00B	HOSE (4X8X2000)	1	L:2000->1500
14	09362-09008	UNION	1	
15	09407-10404	CLAMP (L:100)	2	
16	09116-10137	BOLT (10X70)	1	W/TRANSOM(L)
17	09116-10150	BOLT (10X55)	4	W/TRANSOM(L)
18	29141-93J20	NUT, EXTENSION BOLT	5	W/TRANSOM(X)
19	09160-10141	WASHER (10.5X19X2)	5	W/TRANSOM(X)
20-1	58100-87LA0-019	PROPELLER (3X14X13)	1	
20-2	58100-87LB0-019	PROPELLER (3X13.875X15)	1	
20-3	58100-87LC0-019	PROPELLER (3X13.75X17)	1	
20-4	58100-87LD0-019	PROPELLER (3X13.75X19)	1	
20-5	58100-87LE0-019	PROPELLER (3X13.75X21)	1	
20-6	58100-87LF0-019	PROPELLER (3X13.75X23)	1	
20-7	58100-90JA0-019	PROPELLER (3X14X17)	1	OPT
20-8	58100-90JB0-019	PROPELLER (3X14X19)	1	OPT
20-9	58100-90JC0-019	PROPELLER (3X14X21)	1	OPT
20-10	58100-90JD0-019	PROPELLER (3X14X23)	1	OPT
20-11	58100-90JE0-019	PROPELLER (3X13.5X15)	1	OPT

FIG.407B

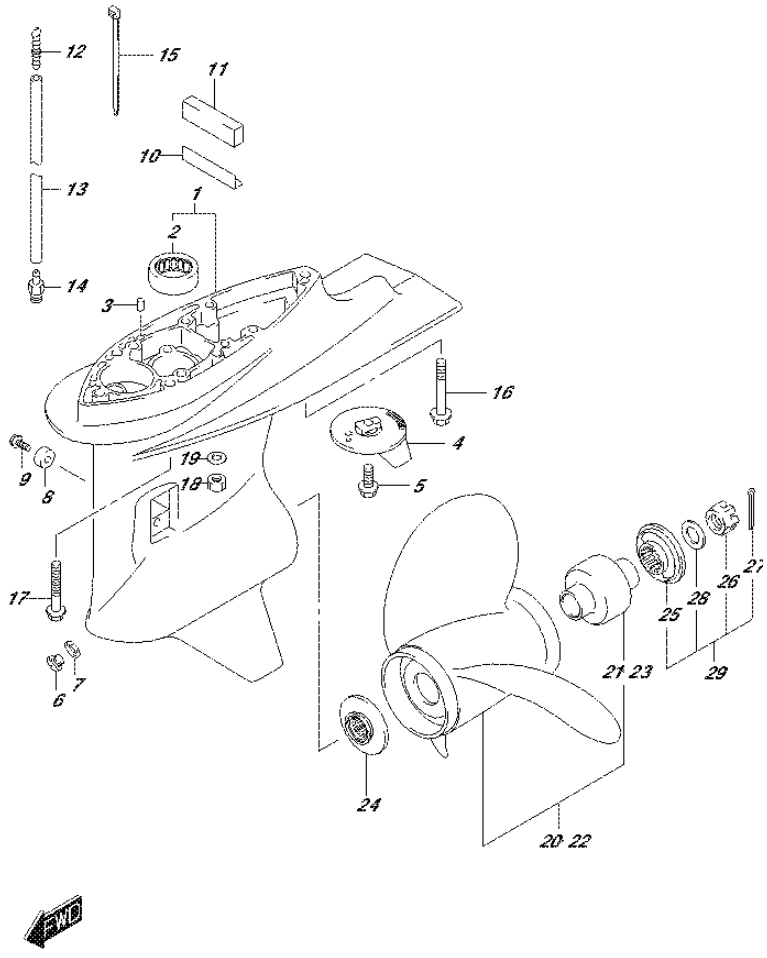

FIG.407B (2-E-4) GEAR CASE (DF70A E40)

REF NO.	PART NO.	DESCRIPTION	Q'TY	REMARKS
20-12	58200-92J40	PROPELLER (3X13.875X15)	1	OPT
				SUS
20-13	58200-92J50	PROPELLER (3X13.875X17)	1	OPT
				SUS
20-14	58200-92J60	PROPELLER (3X13.875X19)	1	OPT
				SUS
20-15	58200-92J70	PROPELLER (3X13.875X21)	1	OPT
				SUS
20-16	58200-92J80	PROPELLER (3X13.875X23)	1	OPT
				SUS
20-17	58200-92J90	PROPELLER (3X13.875X25)	1	OPT
				SUS
21	58105-90J00	.BUSH	1	
22-1	58200-90J00	PROPELLER (3X14.25X18)	1	OPT
				SUS
22-2	58200-90J10	PROPELLER (3X14.25X20)	1	OPT
				SUS
22-3	58200-90J20	PROPELLER (3X14.25X22)	1	OPT
				SUS
22-4	58200-90J30	PROPELLER (3X14.25X24)	1	OPT
				SUS
23	58120-90J00	.BUSH	1	OPT
24	57632-87L01	STOPPER, PROPELLER BUSH	1	
25	57633-90J02	SPACER, PROPELLER NUT	1	
26	09141-18005	NUT	1	
27	09204-03003	COTTER PIN (D:3.6,L:25)	1	
28	09160-18028	WASHER (18.5X31X1)	1	
29	57630-90J00	KIT, PROPELLER NUT	1	OPT
30	25700-87L00	SEALING KIT, GEAR CASE	1	OPT
				NOT ILLUSTRATED

FIG.407C

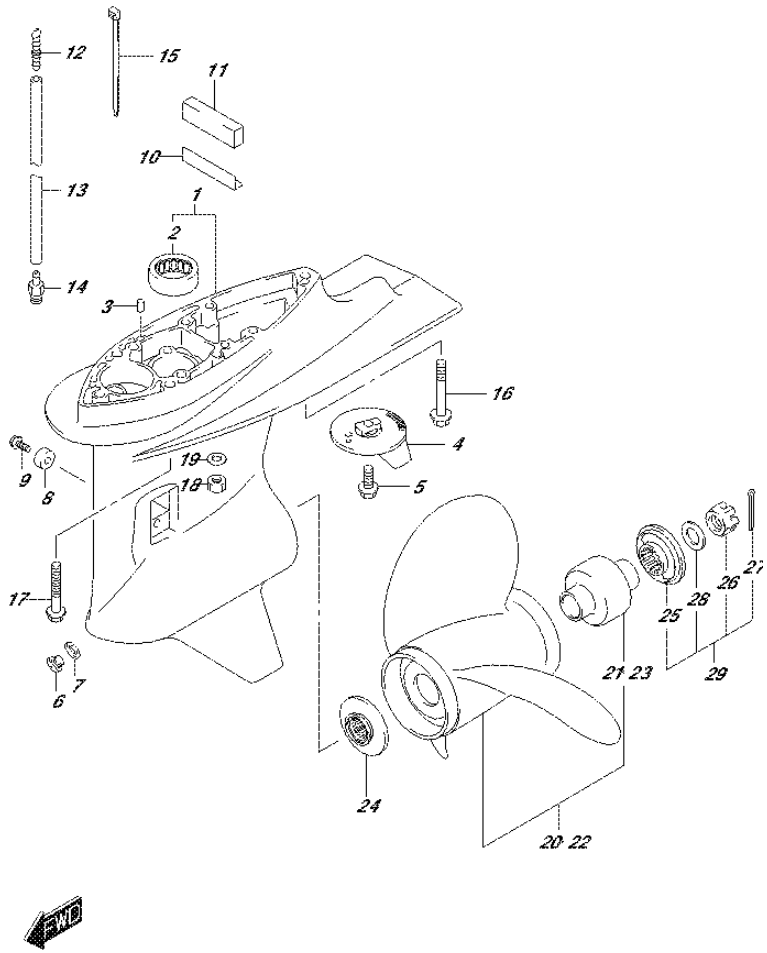

FIG.407C (2-E-5) GEAR CASE (DF70ATH E01)

REF NO.	PART NO.	DESCRIPTION	Q'TY	REMARKS
1	55110-87L30-0EP	CASE, GEAR (BLACK)	1	
2	09263-26023	.BEARING (26X34X30)	1	
3	09202-08006	PIN (8X12)	2	
4	55125-90J01	TAB, TRIM	1	
5	09116-08137	BOLT (8X22)	1	
6	09248-10008	PLUG (10X7.5)	2	
7	09168-10034	GASKET (9.5X16.5X2)	2	
8-1	55321-87J00	ANODE, PROTECTION	1	
8-2	55321-87J10	ANODE (MAGNESIUM)	1	OPT
9	09103-06281	BOLT (6X14)	1	
10	55333-87L00	PLATE, EXHAUST SEAL	1	
11	52332-87L10	SEAL, EXH TUBE HOUSING	1	
12	55127-87D00	UNION, SPEEDOMETER HOSE	1	
13	09355-40805-00B	HOSE (4X8X2000)	1	L:2000->1500
14	09362-09008	UNION	1	
15	09407-10404	CLAMP (L:100)	2	
16	09116-10137	BOLT (10X70)	1	W/TRANSOM(L)
17	09116-10150	BOLT (10X55)	4	W/TRANSOM(L)
18	29141-93J20	NUT, EXTENSION BOLT	5	W/TRANSOM(X)
19	09160-10141	WASHER (10.5X19X2)	5	W/TRANSOM(X)
20-1	58100-87LA0-019	PROPELLER (3X14X13)	1	
20-2	58100-87LB0-019	PROPELLER (3X13.875X15)	1	
20-3	58100-87LC0-019	PROPELLER (3X13.75X17)	1	
20-4	58100-87LD0-019	PROPELLER (3X13.75X19)	1	
20-5	58100-87LE0-019	PROPELLER (3X13.75X21)	1	
20-6	58100-87LF0-019	PROPELLER (3X13.75X23)	1	
20-7	58100-90JA0-019	PROPELLER (3X14X17)	1	OPT
20-8	58100-90JB0-019	PROPELLER (3X14X19)	1	OPT
20-9	58100-90JC0-019	PROPELLER (3X14X21)	1	OPT
20-10	58100-90JD0-019	PROPELLER (3X14X23)	1	OPT
20-11	58100-90JE0-019	PROPELLER (3X13.5X15)	1	OPT

FIG.407C

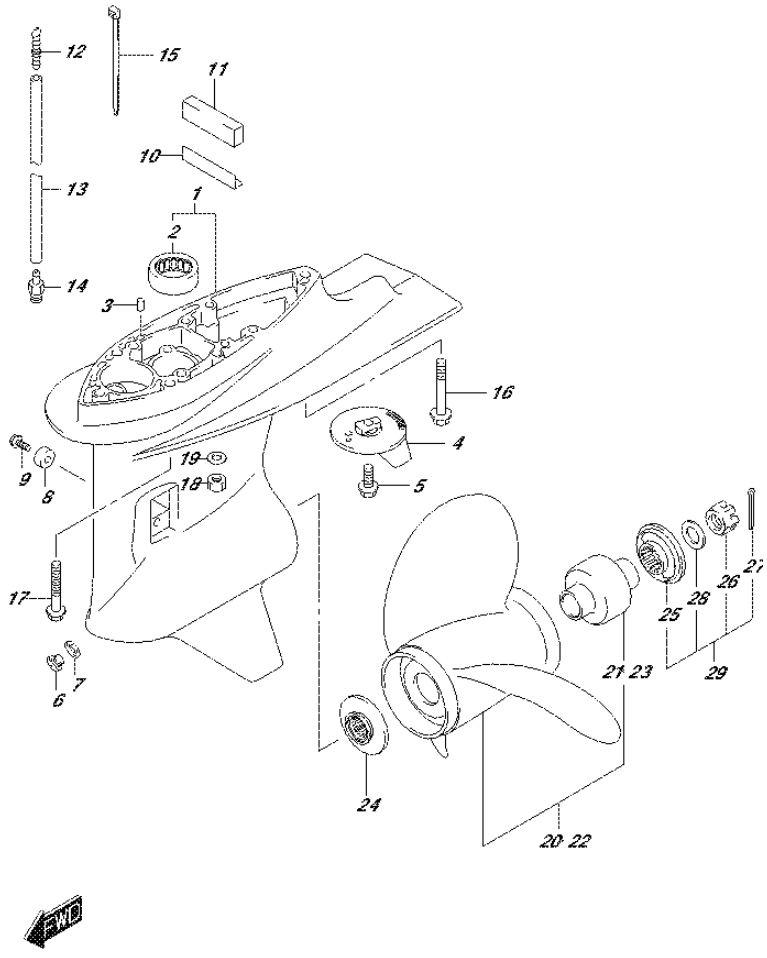

FIG.407C (2-E-6) GEAR CASE (DF70ATH E01)

REF NO.	PART NO.	DESCRIPTION	Q'TY	REMARKS
20-12	58200-92J40	PROPELLER (3X13.875X15)	1	OPT
				SUS
20-13	58200-92J50	PROPELLER (3X13.875X17)	1	OPT
				SUS
20-14	58200-92J60	PROPELLER (3X13.875X19)	1	OPT
				SUS
20-15	58200-92J70	PROPELLER (3X13.875X21)	1	OPT
				SUS
20-16	58200-92J80	PROPELLER (3X13.875X23)	1	OPT
				SUS
20-17	58200-92J90	PROPELLER (3X13.875X25)	1	OPT
				SUS
21	58105-90J00	.BUSH	1	
22-1	58200-90J00	PROPELLER (3X14.25X18)	1	OPT
				SUS
22-2	58200-90J10	PROPELLER (3X14.25X20)	1	OPT
				SUS
22-3	58200-90J20	PROPELLER (3X14.25X22)	1	OPT
				SUS
22-4	58200-90J30	PROPELLER (3X14.25X24)	1	OPT
				SUS
23	58120-90J00	.BUSH	1	OPT
24	57632-87L01	STOPPER, PROPELLER BUSH	1	
25	57633-90J02	SPACER, PROPELLER NUT	1	
26	09141-18005	NUT	1	
27	09204-03003	COTTER PIN (D:3.6,L:25)	1	
28	09160-18028	WASHER (18.5X31X1)	1	
29	57630-90J00	KIT, PROPELLER NUT	1	OPT
30	25700-87L00	SEALING KIT, GEAR CASE	1	OPT
				NOT ILLUSTRATED

FIG.407D

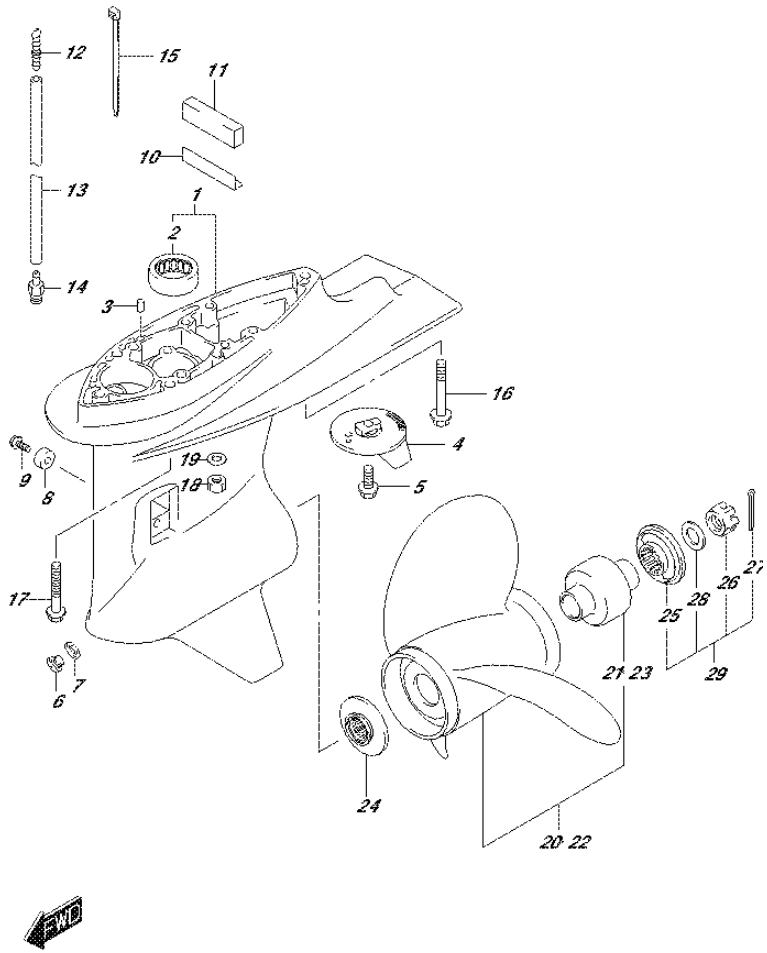

FIG.407D (2-E-7) GEAR CASE (DF70ATH E40)

REF NO.	PART NO.	DESCRIPTION	Q'TY	REMARKS
1	55110-87L30-0EP	CASE, GEAR (BLACK)	1	
2	09263-26023	.BEARING (26X34X30)	1	
3	09202-08006	PIN (8X12)	2	
4	55125-90J01	TAB, TRIM	1	
5	09116-08137	BOLT (8X22)	1	
6	09248-10008	PLUG (10X7.5)	2	
7	09168-10034	GASKET (9.5X16.5X2)	2	
8-1	55321-87J00	ANODE, PROTECTION	1	
8-2	55321-87J10	ANODE (MAGNESIUM)	1	OPT
9	09103-06281	BOLT (6X14)	1	
10	55333-87L00	PLATE, EXHAUST SEAL	1	
11	52332-87L10	SEAL, EXH TUBE HOUSING	1	
12	55127-87D00	UNION, SPEEDOMETER HOSE	1	
13	09355-40805-00B	HOSE (4X8X2000)	1	L:2000->1500
14	09362-09008	UNION	1	
15	09407-10404	CLAMP (L:100)	2	
16	09116-10137	BOLT (10X70)	1	W/TRANSOM(L)
17	09116-10150	BOLT (10X55)	4	W/TRANSOM(L)
18	29141-93J20	NUT, EXTENSION BOLT	5	W/TRANSOM(X)
19	09160-10141	WASHER (10.5X19X2)	5	W/TRANSOM(X)
20-1	58100-87LA0-019	PROPELLER (3X14X13)	1	
20-2	58100-87LB0-019	PROPELLER (3X13.875X15)	1	
20-3	58100-87LC0-019	PROPELLER (3X13.75X17)	1	
20-4	58100-87LD0-019	PROPELLER (3X13.75X19)	1	
20-5	58100-87LE0-019	PROPELLER (3X13.75X21)	1	
20-6	58100-87LF0-019	PROPELLER (3X13.75X23)	1	
20-7	58100-90JA0-019	PROPELLER (3X14X17)	1	OPT
20-8	58100-90JB0-019	PROPELLER (3X14X19)	1	OPT
20-9	58100-90JC0-019	PROPELLER (3X14X21)	1	OPT
20-10	58100-90JD0-019	PROPELLER (3X14X23)	1	OPT
20-11	58100-90JE0-019	PROPELLER (3X13.5X15)	1	OPT

FIG.407D

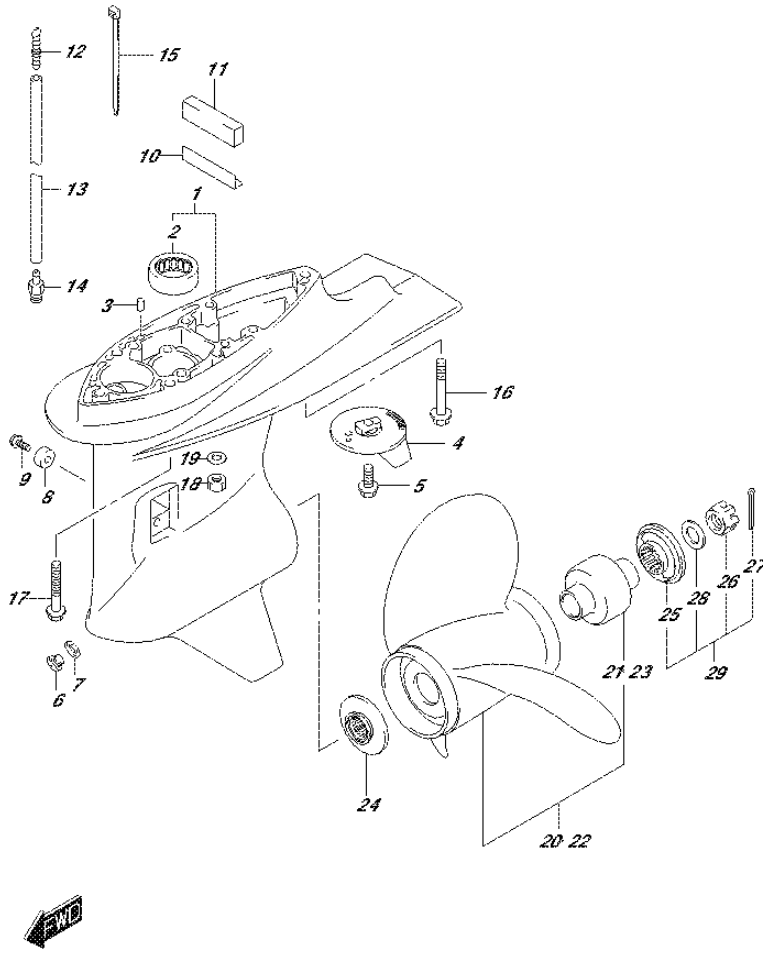

FIG.407D (2-E-8) GEAR CASE (DF70ATH E40)

REF NO.	PART NO.	DESCRIPTION	Q'TY	REMARKS
20-12	58200-92J40	PROPELLER (3X13.875X15)	1	OPT
				SUS
20-13	58200-92J50	PROPELLER (3X13.875X17)	1	OPT
				SUS
20-14	58200-92J60	PROPELLER (3X13.875X19)	1	OPT
				SUS
20-15	58200-92J70	PROPELLER (3X13.875X21)	1	OPT
				SUS
20-16	58200-92J80	PROPELLER (3X13.875X23)	1	OPT
				SUS
20-17	58200-92J90	PROPELLER (3X13.875X25)	1	OPT
				SUS
21	58105-90J00	.BUSH	1	
22-1	58200-90J00	PROPELLER (3X14.25X18)	1	OPT
				SUS
22-2	58200-90J10	PROPELLER (3X14.25X20)	1	OPT
				SUS
22-3	58200-90J20	PROPELLER (3X14.25X22)	1	OPT
				SUS
22-4	58200-90J30	PROPELLER (3X14.25X24)	1	OPT
				SUS
23	58120-90J00	.BUSH	1	OPT
24	57632-87L01	STOPPER, PROPELLER BUSH	1	
25	57633-90J02	SPACER, PROPELLER NUT	1	
26	09141-18005	NUT	1	
27	09204-03003	COTTER PIN (D:3.6,L:25)	1	
28	09160-18028	WASHER (18.5X31X1)	1	
29	57630-90J00	KIT, PROPELLER NUT	1	OPT
30	25700-87L00	SEALING KIT, GEAR CASE	1	OPT
				NOT ILLUSTRATED

FIG.407E

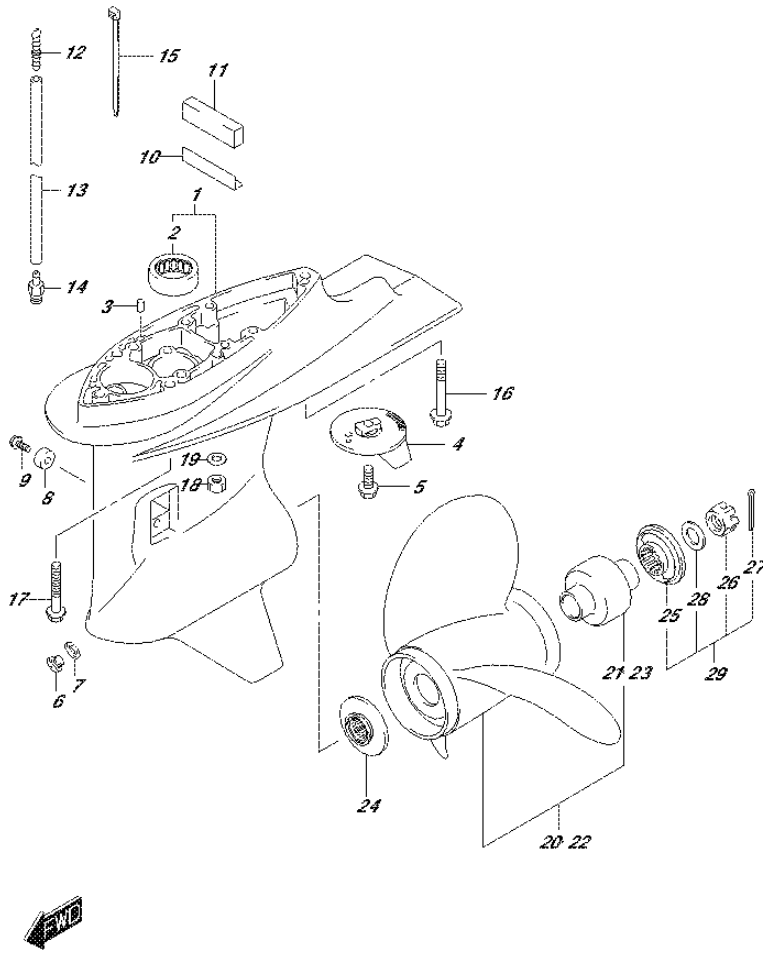

FIG.407E (2-E-9) GEAR CASE (DF80A E01)

REF NO.	PART NO.	DESCRIPTION	Q'TY	REMARKS
1	55110-87L30-0EP	CASE, GEAR (BLACK)	1	
2	09263-26023	.BEARING (26X34X30)	1	
3	09202-08006	PIN (8X12)	2	
4	55125-90J01	TAB, TRIM	1	
5	09116-08137	BOLT (8X22)	1	
6	09248-10008	PLUG (10X7.5)	2	
7	09168-10034	GASKET (9.5X16.5X2)	2	
8-1	55321-87J00	ANODE, PROTECTION	1	
8-2	55321-87J10	ANODE (MAGNESIUM)	1	OPT
9	09103-06281	BOLT (6X14)	1	
10	55333-87L00	PLATE, EXHAUST SEAL	1	
11	52332-87L10	SEAL, EXH TUBE HOUSING	1	
12	55127-87D00	UNION, SPEEDOMETER HOSE	1	
13	09355-40805-00B	HOSE (4X8X2000)	1	L:2000->1500
14	09362-09008	UNION	1	
15	09407-10404	CLAMP (L:100)	2	
16	09116-10137	BOLT (10X70)	1	W/TRANSOM(L)
17	09116-10150	BOLT (10X55)	4	W/TRANSOM(L)
18	29141-93J20	NUT, EXTENSION BOLT	5	W/TRANSOM(X)
19	09160-10141	WASHER (10.5X19X2)	5	W/TRANSOM(X)
20-1	58100-87LA0-019	PROPELLER (3X14X13)	1	
20-2	58100-87LB0-019	PROPELLER (3X13.875X15)	1	
20-3	58100-87LC0-019	PROPELLER (3X13.75X17)	1	
20-4	58100-87LD0-019	PROPELLER (3X13.75X19)	1	
20-5	58100-87LE0-019	PROPELLER (3X13.75X21)	1	
20-6	58100-87LF0-019	PROPELLER (3X13.75X23)	1	
20-7	58100-90JA0-019	PROPELLER (3X14X17)	1	OPT
20-8	58100-90JB0-019	PROPELLER (3X14X19)	1	OPT
20-9	58100-90JC0-019	PROPELLER (3X14X21)	1	OPT
20-10	58100-90JD0-019	PROPELLER (3X14X23)	1	OPT
20-11	58100-90JE0-019	PROPELLER (3X13.5X15)	1	OPT

FIG.407E

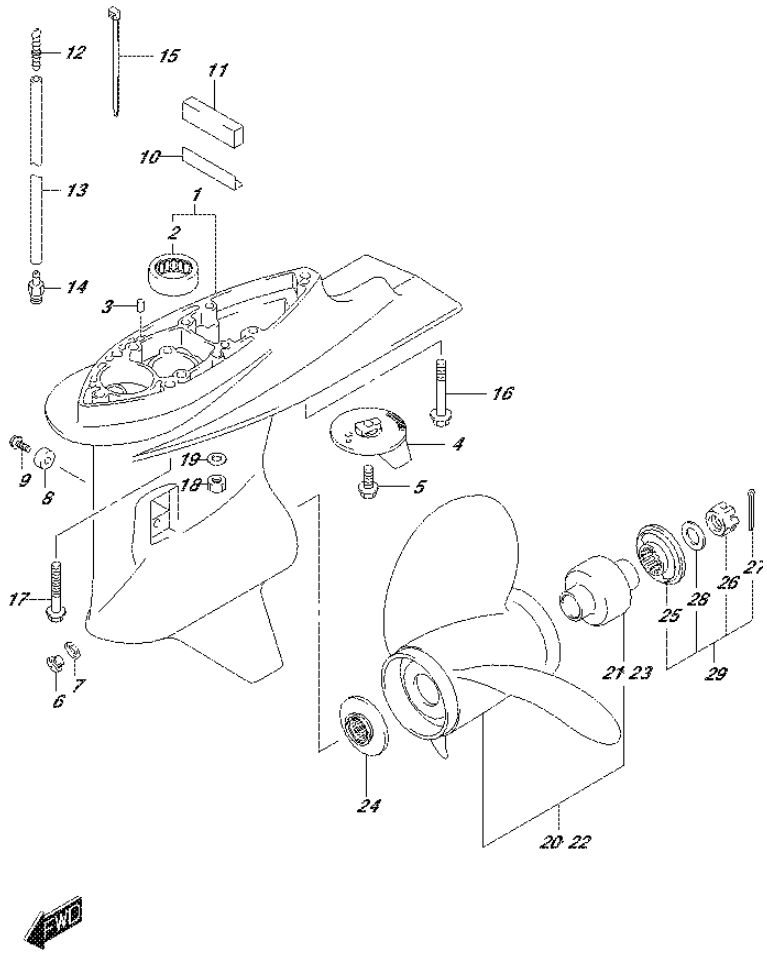

FIG.407E (2-E-10) GEAR CASE (DF80A E01)

REF NO.	PART NO.	DESCRIPTION	Q'TY	REMARKS
20-12	58200-92J40	PROPELLER (3X13.875X15)	1	OPT
				SUS
20-13	58200-92J50	PROPELLER (3X13.875X17)	1	OPT
				SUS
20-14	58200-92J60	PROPELLER (3X13.875X19)	1	OPT
				SUS
20-15	58200-92J70	PROPELLER (3X13.875X21)	1	OPT
				SUS
20-16	58200-92J80	PROPELLER (3X13.875X23)	1	OPT
				SUS
20-17	58200-92J90	PROPELLER (3X13.875X25)	1	OPT
				SUS
21	58105-90J00	.BUSH	1	
22-1	58200-90J00	PROPELLER (3X14.25X18)	1	OPT
				SUS
22-2	58200-90J10	PROPELLER (3X14.25X20)	1	OPT
				SUS
22-3	58200-90J20	PROPELLER (3X14.25X22)	1	OPT
				SUS
22-4	58200-90J30	PROPELLER (3X14.25X24)	1	OPT
				SUS
23	58120-90J00	.BUSH	1	OPT
24	57632-87L01	STOPPER, PROPELLER BUSH	1	
25	57633-90J02	SPACER, PROPELLER NUT	1	
26	09141-18005	NUT	1	
27	09204-03003	COTTER PIN (D:3.6,L:25)	1	
28	09160-18028	WASHER (18.5X31X1)	1	
29	57630-90J00	KIT, PROPELLER NUT	1	OPT
30	25700-87L00	SEALING KIT, GEAR CASE	1	OPT
				NOT ILLUSTRATED

FIG.407F

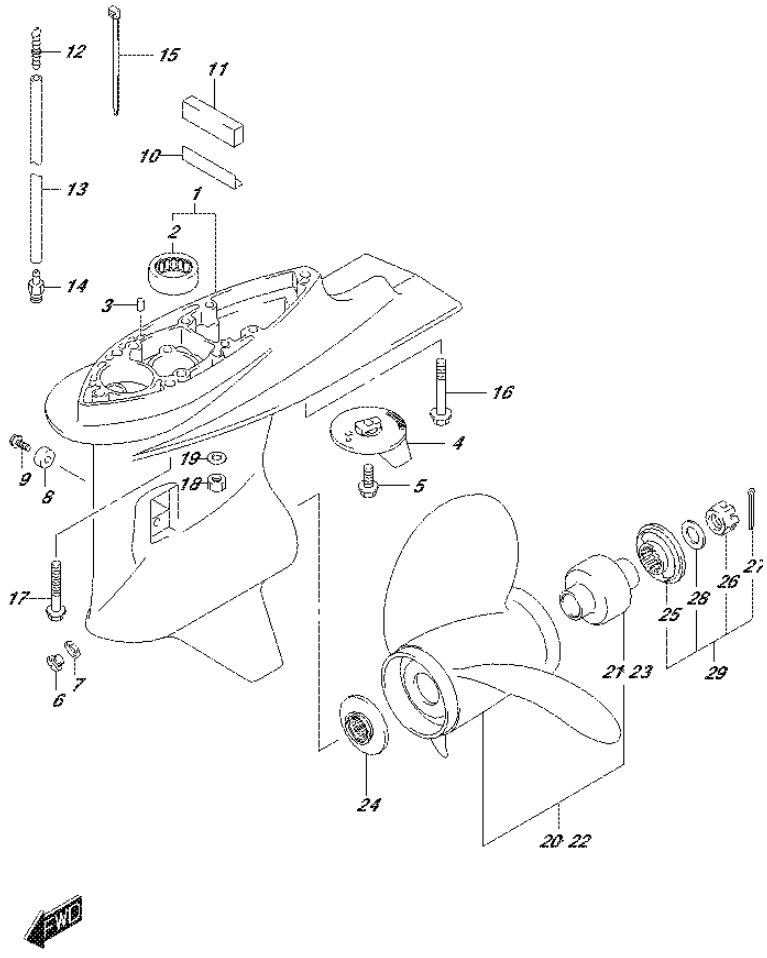

FIG.407F (2-E-11) GEAR CASE (DF80A E40)

REF NO.	PART NO.	DESCRIPTION	Q'TY	REMARKS
1	55110-87L30-0EP	CASE, GEAR (BLACK)	1	
2	09263-26023	.BEARING (26X34X30)	1	
3	09202-08006	PIN (8X12)	2	
4	55125-90J01	TAB, TRIM	1	
5	09116-08137	BOLT (8X22)	1	
6	09248-10008	PLUG (10X7.5)	2	
7	09168-10034	GASKET (9.5X16.5X2)	2	
8-1	55321-87J00	ANODE, PROTECTION	1	
8-2	55321-87J10	ANODE (MAGNESIUM)	1	OPT
9	09103-06281	BOLT (6X14)	1	
10	55333-87L00	PLATE, EXHAUST SEAL	1	
11	52332-87L10	SEAL, EXH TUBE HOUSING	1	
12	55127-87D00	UNION, SPEEDOMETER HOSE	1	
13	09355-40805-00B	HOSE (4X8X2000)	1	L:2000->1500
14	09362-09008	UNION	1	
15	09407-10404	CLAMP (L:100)	2	
16	09116-10137	BOLT (10X70)	1	W/TRANSOM(L)
17	09116-10150	BOLT (10X55)	4	W/TRANSOM(L)
18	29141-93J20	NUT, EXTENSION BOLT	5	W/TRANSOM(X)
19	09160-10141	WASHER (10.5X19X2)	5	W/TRANSOM(X)
20-1	58100-87LA0-019	PROPELLER (3X14X13)	1	
20-2	58100-87LB0-019	PROPELLER (3X13.875X15)	1	
20-3	58100-87LC0-019	PROPELLER (3X13.75X17)	1	
20-4	58100-87LD0-019	PROPELLER (3X13.75X19)	1	
20-5	58100-87LE0-019	PROPELLER (3X13.75X21)	1	
20-6	58100-87LF0-019	PROPELLER (3X13.75X23)	1	
20-7	58100-90JA0-019	PROPELLER (3X14X17)	1	OPT
20-8	58100-90JB0-019	PROPELLER (3X14X19)	1	OPT
20-9	58100-90JC0-019	PROPELLER (3X14X21)	1	OPT
20-10	58100-90JD0-019	PROPELLER (3X14X23)	1	OPT
20-11	58100-90JE0-019	PROPELLER (3X13.5X15)	1	OPT

FIG.407F

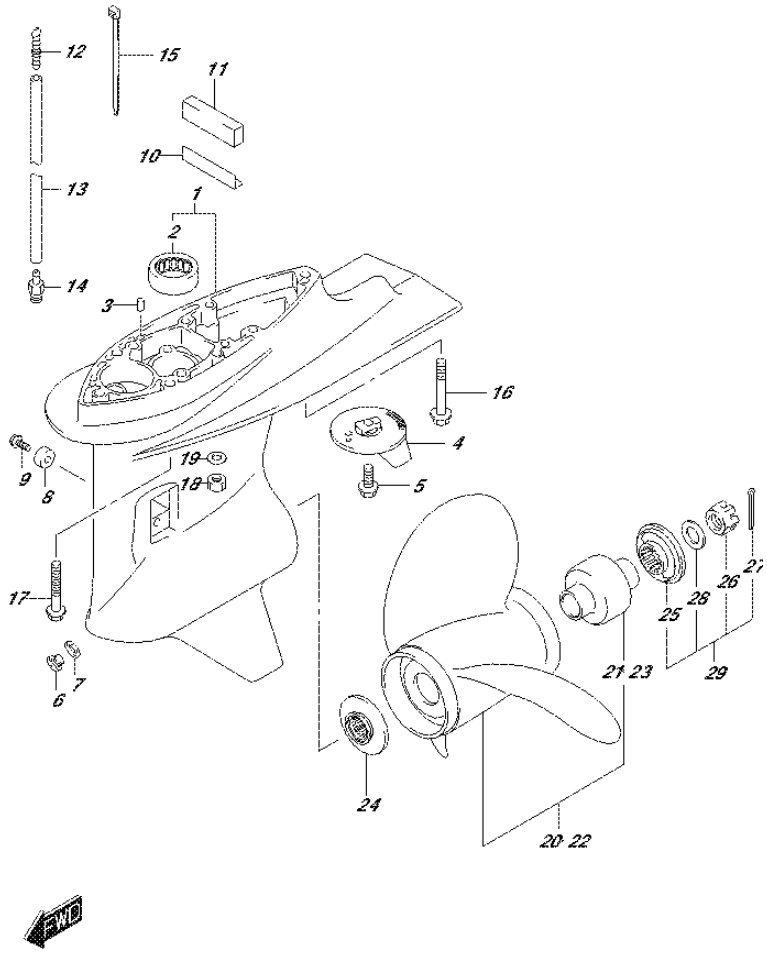

FIG.407F (2-E-12) GEAR CASE (DF80A E40)

REF NO.	PART NO.	DESCRIPTION	Q'TY	REMARKS
20-12	58200-92J40	PROPELLER (3X13.875X15)	1	OPT
				SUS
20-13	58200-92J50	PROPELLER (3X13.875X17)	1	OPT
				SUS
20-14	58200-92J60	PROPELLER (3X13.875X19)	1	OPT
				SUS
20-15	58200-92J70	PROPELLER (3X13.875X21)	1	OPT
				SUS
20-16	58200-92J80	PROPELLER (3X13.875X23)	1	OPT
				SUS
20-17	58200-92J90	PROPELLER (3X13.875X25)	1	OPT
				SUS
21	58105-90J00	.BUSH	1	
22-1	58200-90J00	PROPELLER (3X14.25X18)	1	OPT
				SUS
22-2	58200-90J10	PROPELLER (3X14.25X20)	1	OPT
				SUS
22-3	58200-90J20	PROPELLER (3X14.25X22)	1	OPT
				SUS
22-4	58200-90J30	PROPELLER (3X14.25X24)	1	OPT
				SUS
23	58120-90J00	.BUSH	1	OPT
24	57632-87L01	STOPPER, PROPELLER BUSH	1	
25	57633-90J02	SPACER, PROPELLER NUT	1	
26	09141-18005	NUT	1	
27	09204-03003	COTTER PIN (D:3.6,L:25)	1	
28	09160-18028	WASHER (18.5X31X1)	1	
29	57630-90J00	KIT, PROPELLER NUT	1	OPT
30	25700-87L00	SEALING KIT, GEAR CASE	1	OPT
				NOT ILLUSTRATED

FIG.407G

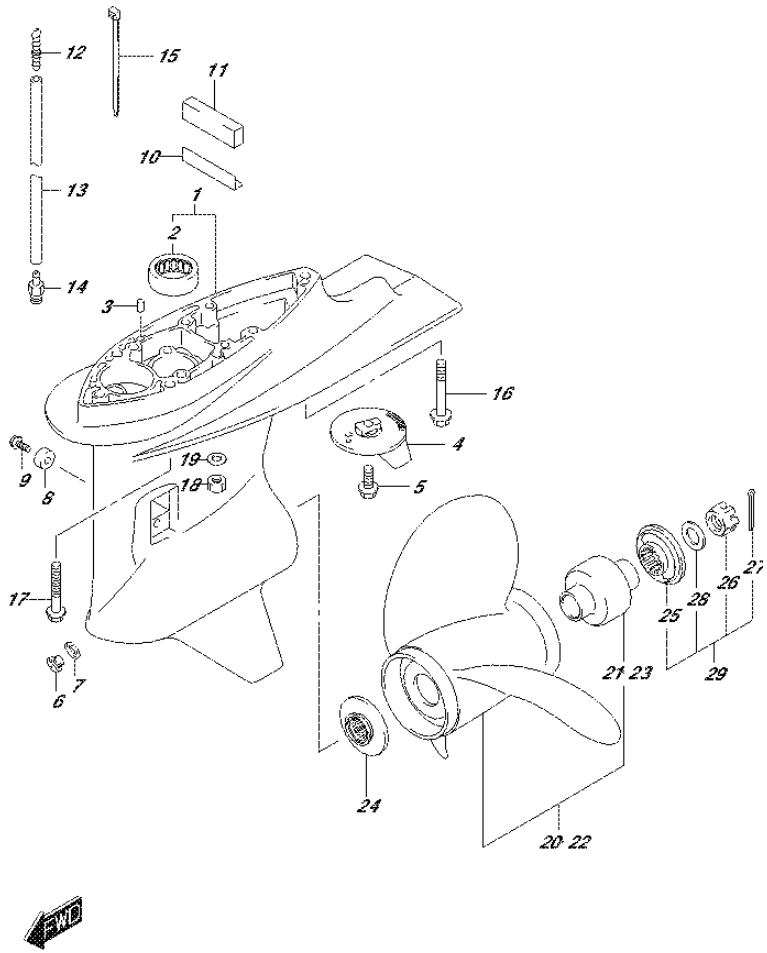

FIG.407G (2-E-13) GEAR CASE (DF90A E01)

REF NO.	PART NO.	DESCRIPTION	Q'TY	REMARKS
1-1	55110-87L30-0EP	CASE, GEAR (BLACK)	1	
1-2	55110-87L30-Y5S	CASE, GEAR (WHITE)	1	
2	09263-26023	.BEARING (26X34X30)	1	
3	09202-08006	PIN (8X12)	2	
4	55125-90J01	TAB, TRIM	1	
5	09116-08137	BOLT (8X22)	1	
6	09248-10008	PLUG (10X7.5)	2	
7	09168-10034	GASKET (9.5X16.5X2)	2	
8-1	55321-87J00	ANODE, PROTECTION	1	
8-2	55321-87J10	ANODE (MAGNESIUM)	1	OPT
9	09103-06281	BOLT (6X14)	1	
10	55333-87L00	PLATE, EXHAUST SEAL	1	
11	52332-87L10	SEAL, EXH TUBE HOUSING	1	
12	55127-87D00	UNION, SPEEDOMETER HOSE	1	
13	09355-40805-00B	HOSE (4X8X2000)	1	L:2000->1500
14	09362-09008	UNION	1	
15	09407-10404	CLAMP (L:100)	2	
16	09116-10137	BOLT (10X70)	1	W/TRANSOM(L)
17	09116-10150	BOLT (10X55)	4	W/TRANSOM(L)
18	29141-93J20	NUT, EXTENSION BOLT	5	W/TRANSOM(X)
19	09160-10141	WASHER (10.5X19X2)	5	W/TRANSOM(X)
20-1	58100-87LA0-019	PROPELLER (3X14X13)	1	
20-2	58100-87LB0-019	PROPELLER (3X13.875X15)	1	
20-3	58100-87LC0-019	PROPELLER (3X13.75X17)	1	
20-4	58100-87LD0-019	PROPELLER (3X13.75X19)	1	
20-5	58100-87LE0-019	PROPELLER (3X13.75X21)	1	
20-6	58100-87LF0-019	PROPELLER (3X13.75X23)	1	
20-7	58100-90JA0-019	PROPELLER (3X14X17)	1	OPT
20-8	58100-90JB0-019	PROPELLER (3X14X19)	1	OPT
20-9	58100-90JC0-019	PROPELLER (3X14X21)	1	OPT
20-10	58100-90JD0-019	PROPELLER (3X14X23)	1	OPT
20-11	58100-90JE0-019	PROPELLER (3X13.5X15)	1	OPT

FIG.407G

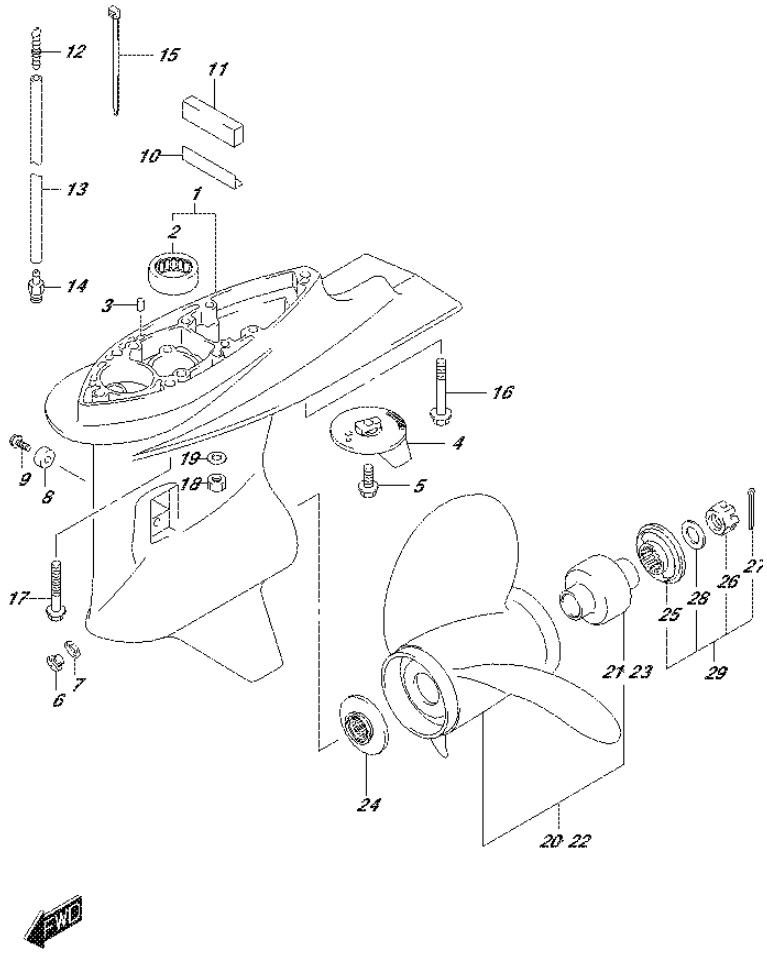

FIG.407G (2-E-14) GEAR CASE (DF90A E01)

REF NO.	PART NO.	DESCRIPTION	Q'TY	REMARKS
20-12	58200-92J40	PROPELLER (3X13.875X15)	1	OPT
				SUS
20-13	58200-92J50	PROPELLER (3X13.875X17)	1	OPT
				SUS
20-14	58200-92J60	PROPELLER (3X13.875X19)	1	OPT
				SUS
20-15	58200-92J70	PROPELLER (3X13.875X21)	1	OPT
				SUS
20-16	58200-92J80	PROPELLER (3X13.875X23)	1	OPT
				SUS
20-17	58200-92J90	PROPELLER (3X13.875X25)	1	OPT
				SUS
21	58105-90J00	.BUSH	1	
22-1	58200-90J00	PROPELLER (3X14.25X18)	1	OPT
				SUS
22-2	58200-90J10	PROPELLER (3X14.25X20)	1	OPT
				SUS
22-3	58200-90J20	PROPELLER (3X14.25X22)	1	OPT
				SUS
22-4	58200-90J30	PROPELLER (3X14.25X24)	1	OPT
				SUS
23	58120-90J00	.BUSH	1	OPT
24	57632-87L01	STOPPER, PROPELLER BUSH	1	
25	57633-90J02	SPACER, PROPELLER NUT	1	
26	09141-18005	NUT	1	
27	09204-03003	COTTER PIN (D:3.6,L:25)	1	
28	09160-18028	WASHER (18.5X31X1)	1	
29	57630-90J00	KIT, PROPELLER NUT	1	OPT
30	25700-87L00	SEALING KIT, GEAR CASE	1	OPT
				NOT ILLUSTRATED

FIG.407H

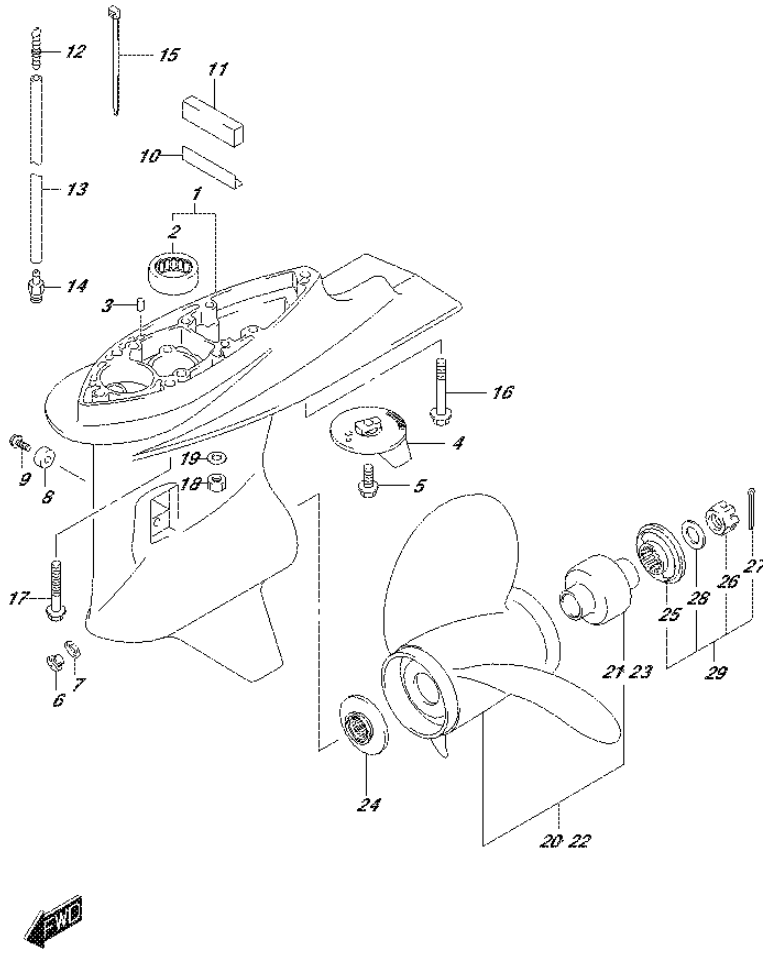

FIG.407H (2-E-15) GEAR CASE (DF90A E40)

REF NO.	PART NO.	DESCRIPTION	Q'TY	REMARKS
1-1	55110-87L30-0EP	CASE, GEAR (BLACK)	1	
1-2	55110-87L30-Y5S	CASE, GEAR (WHITE)	1	
2	09263-26023	.BEARING (26X34X30)	1	
3	09202-08006	PIN (8X12)	2	
4	55125-90J01	TAB, TRIM	1	
5	09116-08137	BOLT (8X22)	1	
6	09248-10008	PLUG (10X7.5)	2	
7	09168-10034	GASKET (9.5X16.5X2)	2	
8-1	55321-87J00	ANODE, PROTECTION	1	
8-2	55321-87J10	ANODE (MAGNESIUM)	1	OPT
9	09103-06281	BOLT (6X14)	1	
10	55333-87L00	PLATE, EXHAUST SEAL	1	
11	52332-87L10	SEAL, EXH TUBE HOUSING	1	
12	55127-87D00	UNION, SPEEDOMETER HOSE	1	
13	09355-40805-00B	HOSE (4X8X2000)	1	L:2000->1500
14	09362-09008	UNION	1	
15	09407-10404	CLAMP (L:100)	2	
16	09116-10137	BOLT (10X70)	1	W/TRANSOM(L)
17	09116-10150	BOLT (10X55)	4	W/TRANSOM(L)
18	29141-93J20	NUT, EXTENSION BOLT	5	W/TRANSOM(X)
19	09160-10141	WASHER (10.5X19X2)	5	W/TRANSOM(X)
20-1	58100-87LA0-019	PROPELLER (3X14X13)	1	
20-2	58100-87LB0-019	PROPELLER (3X13.875X15)	1	
20-3	58100-87LC0-019	PROPELLER (3X13.75X17)	1	
20-4	58100-87LD0-019	PROPELLER (3X13.75X19)	1	
20-5	58100-87LE0-019	PROPELLER (3X13.75X21)	1	
20-6	58100-87LF0-019	PROPELLER (3X13.75X23)	1	
20-7	58100-90JA0-019	PROPELLER (3X14X17)	1	OPT
20-8	58100-90JB0-019	PROPELLER (3X14X19)	1	OPT
20-9	58100-90JC0-019	PROPELLER (3X14X21)	1	OPT
20-10	58100-90JD0-019	PROPELLER (3X14X23)	1	OPT
20-11	58100-90JE0-019	PROPELLER (3X13.5X15)	1	OPT

FIG.407H

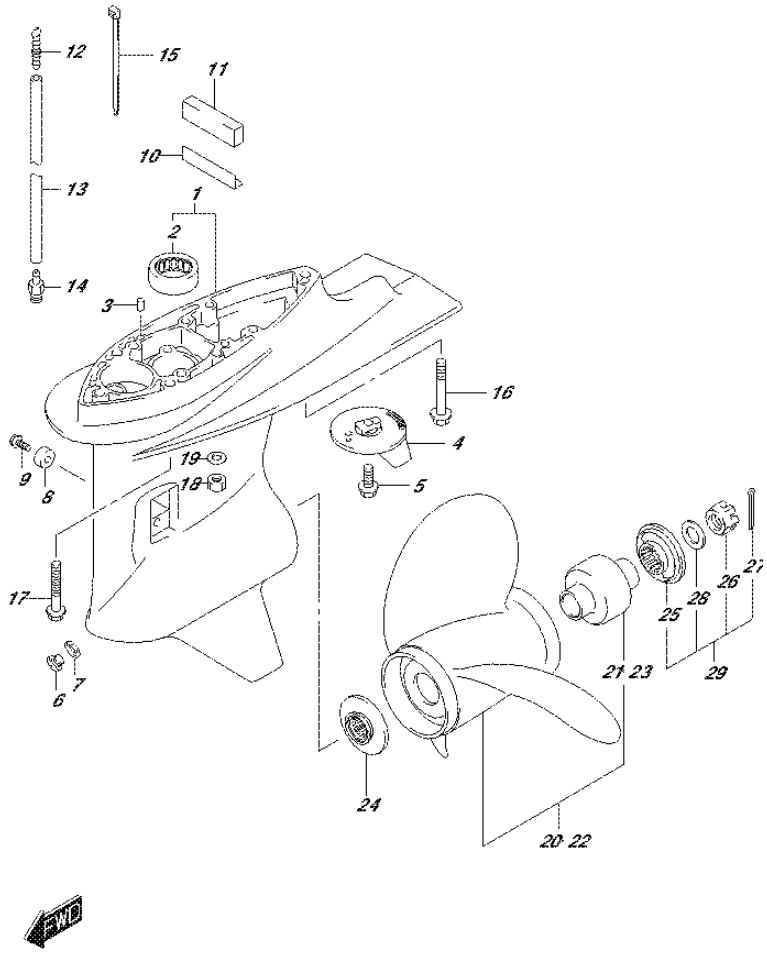

FIG.407H (2-F-2) GEAR CASE (DF90A E40)

REF NO.	PART NO.	DESCRIPTION	Q'TY	REMARKS
20-12	58200-92J40	PROPELLER (3X13.875X15)	1	OPT
				SUS
20-13	58200-92J50	PROPELLER (3X13.875X17)	1	OPT
				SUS
20-14	58200-92J60	PROPELLER (3X13.875X19)	1	OPT
				SUS
20-15	58200-92J70	PROPELLER (3X13.875X21)	1	OPT
				SUS
20-16	58200-92J80	PROPELLER (3X13.875X23)	1	OPT
				SUS
20-17	58200-92J90	PROPELLER (3X13.875X25)	1	OPT
				SUS
21	58105-90J00	.BUSH	1	
22-1	58200-90J00	PROPELLER (3X14.25X18)	1	OPT
				SUS
22-2	58200-90J10	PROPELLER (3X14.25X20)	1	OPT
				SUS
22-3	58200-90J20	PROPELLER (3X14.25X22)	1	OPT
				SUS
22-4	58200-90J30	PROPELLER (3X14.25X24)	1	OPT
				SUS
23	58120-90J00	.BUSH	1	OPT
24	57632-87L01	STOPPER, PROPELLER BUSH	1	
25	57633-90J02	SPACER, PROPELLER NUT	1	
26	09141-18005	NUT	1	
27	09204-03003	COTTER PIN (D:3.6,L:25)	1	
28	09160-18028	WASHER (18.5X31X1)	1	
29	57630-90J00	KIT, PROPELLER NUT	1	OPT
30	25700-87L00	SEALING KIT, GEAR CASE	1	OPT
				NOT ILLUSTRATED

FIG.407J

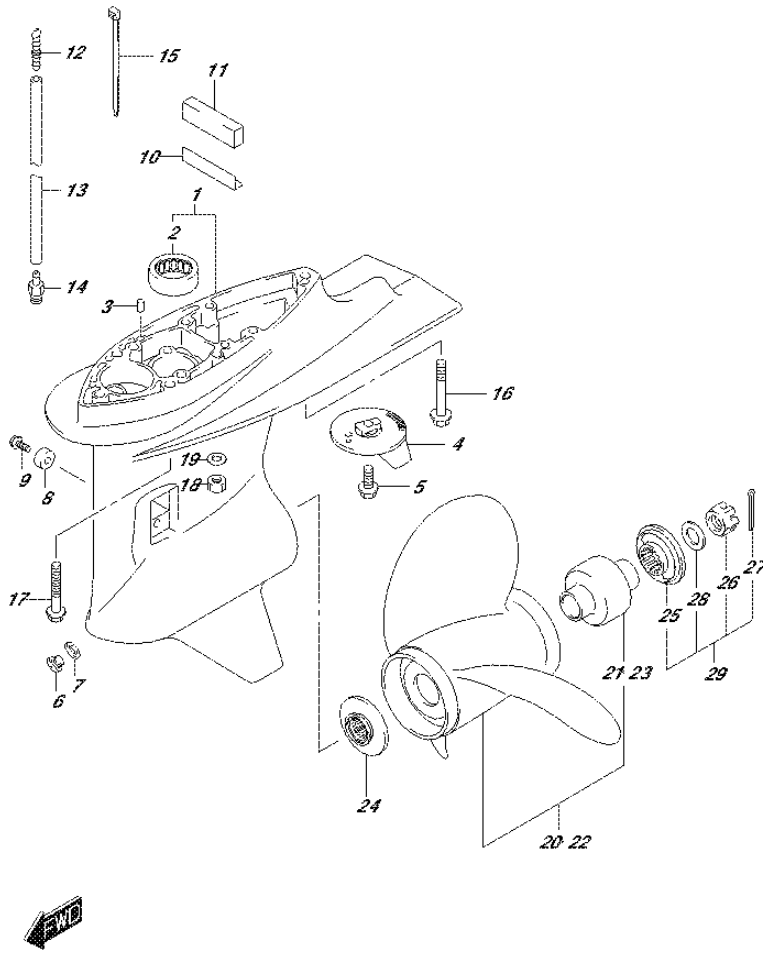

FIG.407J (2-F-3) GEAR CASE (DF90ATH E01)

REF NO.	PART NO.	DESCRIPTION	Q'TY	REMARKS
1	55110-87L30-0EP	CASE, GEAR (BLACK)	1	
2	09263-26023	.BEARING (26X34X30)	1	
3	09202-08006	PIN (8X12)	2	
4	55125-90J01	TAB, TRIM	1	
5	09116-08137	BOLT (8X22)	1	
6	09248-10008	PLUG (10X7.5)	2	
7	09168-10034	GASKET (9.5X16.5X2)	2	
8-1	55321-87J00	ANODE, PROTECTION	1	
8-2	55321-87J10	ANODE (MAGNESIUM)	1	OPT
9	09103-06281	BOLT (6X14)	1	
10	55333-87L00	PLATE, EXHAUST SEAL	1	
11	52332-87L10	SEAL, EXH TUBE HOUSING	1	
12	55127-87D00	UNION, SPEEDOMETER HOSE	1	
13	09355-40805-00B	HOSE (4X8X2000)	1	L:2000->1500
14	09362-09008	UNION	1	
15	09407-10404	CLAMP (L:100)	2	
16	09116-10137	BOLT (10X70)	1	W/TRANSOM(L)
17	09116-10150	BOLT (10X55)	4	W/TRANSOM(L)
18	29141-93J20	NUT, EXTENSION BOLT	5	W/TRANSOM(X)
19	09160-10141	WASHER (10.5X19X2)	5	W/TRANSOM(X)
20-1	58100-87LA0-019	PROPELLER (3X14X13)	1	
20-2	58100-87LB0-019	PROPELLER (3X13.875X15)	1	
20-3	58100-87LC0-019	PROPELLER (3X13.75X17)	1	
20-4	58100-87LD0-019	PROPELLER (3X13.75X19)	1	
20-5	58100-87LE0-019	PROPELLER (3X13.75X21)	1	
20-6	58100-87LF0-019	PROPELLER (3X13.75X23)	1	
20-7	58100-90JA0-019	PROPELLER (3X14X17)	1	OPT
20-8	58100-90JB0-019	PROPELLER (3X14X19)	1	OPT
20-9	58100-90JC0-019	PROPELLER (3X14X21)	1	OPT
20-10	58100-90JD0-019	PROPELLER (3X14X23)	1	OPT
20-11	58100-90JE0-019	PROPELLER (3X13.5X15)	1	OPT

FIG.407J

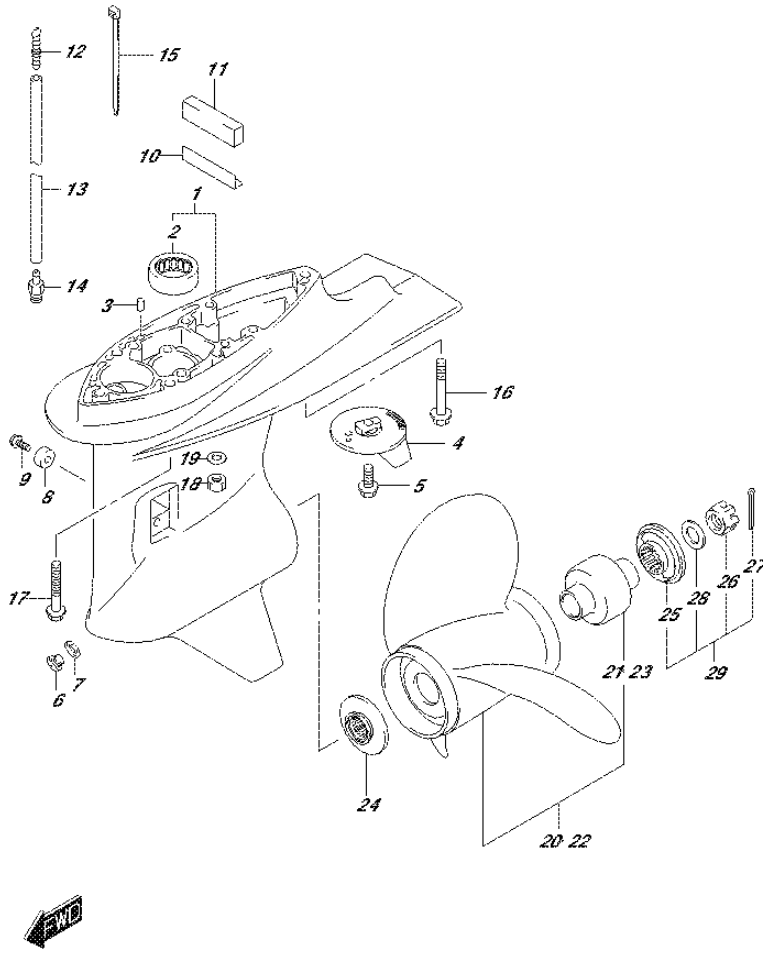

FIG.407J (2-F-4) GEAR CASE (DF90ATH E01)

REF NO.	PART NO.	DESCRIPTION	Q'TY	REMARKS
20-12	58200-92J40	PROPELLER (3X13.875X15)	1	OPT
				SUS
20-13	58200-92J50	PROPELLER (3X13.875X17)	1	OPT
				SUS
20-14	58200-92J60	PROPELLER (3X13.875X19)	1	OPT
				SUS
20-15	58200-92J70	PROPELLER (3X13.875X21)	1	OPT
				SUS
20-16	58200-92J80	PROPELLER (3X13.875X23)	1	OPT
				SUS
20-17	58200-92J90	PROPELLER (3X13.875X25)	1	OPT
				SUS
21	58105-90J00	.BUSH	1	
22-1	58200-90J00	PROPELLER (3X14.25X18)	1	OPT
				SUS
22-2	58200-90J10	PROPELLER (3X14.25X20)	1	OPT
				SUS
22-3	58200-90J20	PROPELLER (3X14.25X22)	1	OPT
				SUS
22-4	58200-90J30	PROPELLER (3X14.25X24)	1	OPT
				SUS
23	58120-90J00	.BUSH	1	OPT
24	57632-87L01	STOPPER, PROPELLER BUSH	1	
25	57633-90J02	SPACER, PROPELLER NUT	1	
26	09141-18005	NUT	1	
27	09204-03003	COTTER PIN (D:3.6,L:25)	1	
28	09160-18028	WASHER (18.5X31X1)	1	
29	57630-90J00	KIT, PROPELLER NUT	1	OPT
30	25700-87L00	SEALING KIT, GEAR CASE	1	OPT
				NOT ILLUSTRATED

FIG.407K

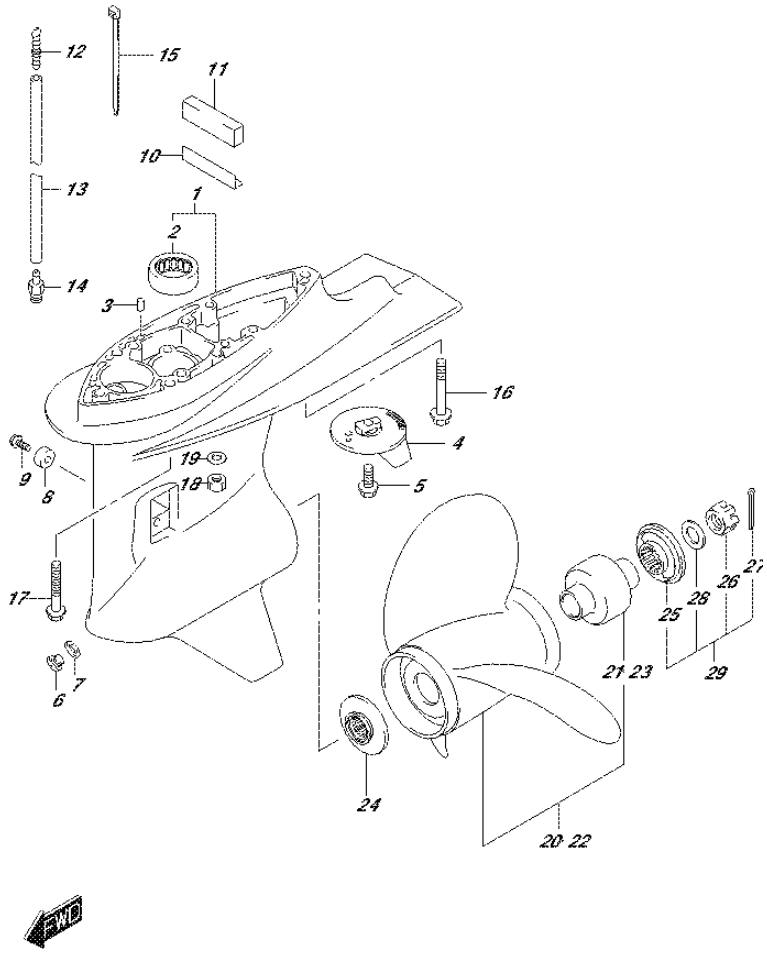

FIG.407K (2-F-5) GEAR CASE (DF90ATH E40)

REF NO.	PART NO.	DESCRIPTION	Q'TY	REMARKS
1	55110-87L30-0EP	CASE, GEAR (BLACK)	1	
2	09263-26023	.BEARING (26X34X30)	1	
3	09202-08006	PIN (8X12)	2	
4	55125-90J01	TAB, TRIM	1	
5	09116-08137	BOLT (8X22)	1	
6	09248-10008	PLUG (10X7.5)	2	
7	09168-10034	GASKET (9.5X16.5X2)	2	
8-1	55321-87J00	ANODE, PROTECTION	1	
8-2	55321-87J10	ANODE (MAGNESIUM)	1	OPT
9	09103-06281	BOLT (6X14)	1	
10	55333-87L00	PLATE, EXHAUST SEAL	1	
11	52332-87L10	SEAL, EXH TUBE HOUSING	1	
12	55127-87D00	UNION, SPEEDOMETER HOSE	1	
13	09355-40805-00B	HOSE (4X8X2000)	1	L:2000->1500
14	09362-09008	UNION	1	
15	09407-10404	CLAMP (L:100)	2	
16	09116-10137	BOLT (10X70)	1	W/TRANSOM(L)
17	09116-10150	BOLT (10X55)	4	W/TRANSOM(L)
18	29141-93J20	NUT, EXTENSION BOLT	5	W/TRANSOM(X)
19	09160-10141	WASHER (10.5X19X2)	5	W/TRANSOM(X)
20-1	58100-87LA0-019	PROPELLER (3X14X13)	1	
20-2	58100-87LB0-019	PROPELLER (3X13.875X15)	1	
20-3	58100-87LC0-019	PROPELLER (3X13.75X17)	1	
20-4	58100-87LD0-019	PROPELLER (3X13.75X19)	1	
20-5	58100-87LE0-019	PROPELLER (3X13.75X21)	1	
20-6	58100-87LF0-019	PROPELLER (3X13.75X23)	1	
20-7	58100-90JA0-019	PROPELLER (3X14X17)	1	OPT
20-8	58100-90JB0-019	PROPELLER (3X14X19)	1	OPT
20-9	58100-90JC0-019	PROPELLER (3X14X21)	1	OPT
20-10	58100-90JD0-019	PROPELLER (3X14X23)	1	OPT
20-11	58100-90JE0-019	PROPELLER (3X13.5X15)	1	OPT

FIG.407K

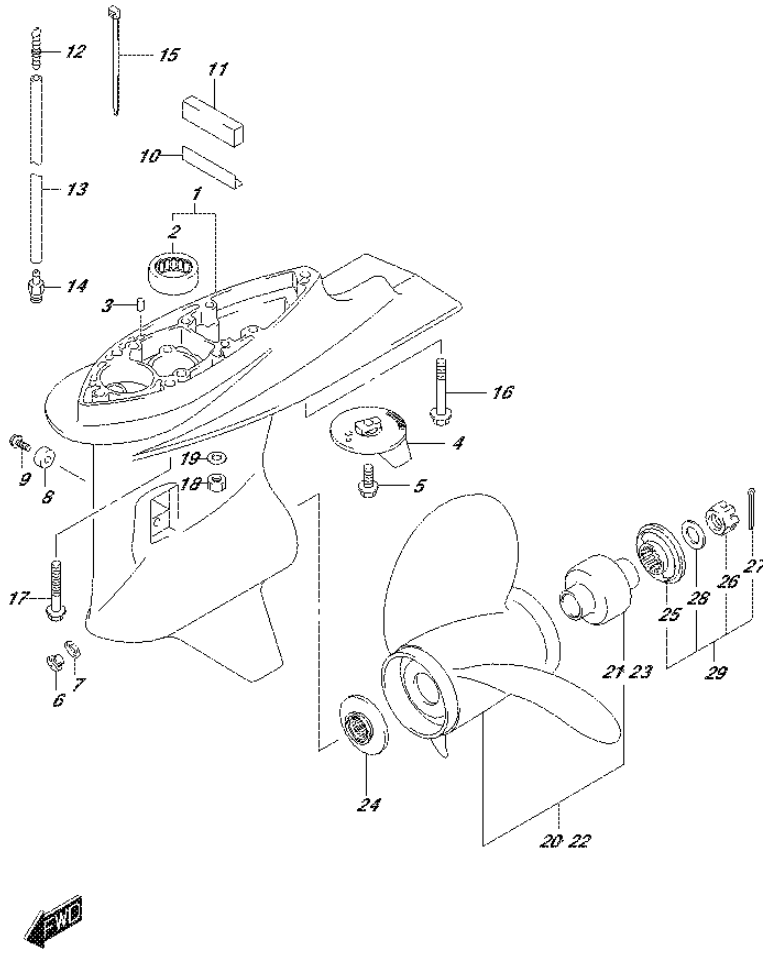

FIG.407K (2-F-6) GEAR CASE (DF90ATH E40)

REF NO.	PART NO.	DESCRIPTION	Q'TY	REMARKS
20-12	58200-92J40	PROPELLER (3X13.875X15)	1	OPT
				SUS
20-13	58200-92J50	PROPELLER (3X13.875X17)	1	OPT
				SUS
20-14	58200-92J60	PROPELLER (3X13.875X19)	1	OPT
				SUS
20-15	58200-92J70	PROPELLER (3X13.875X21)	1	OPT
				SUS
20-16	58200-92J80	PROPELLER (3X13.875X23)	1	OPT
				SUS
20-17	58200-92J90	PROPELLER (3X13.875X25)	1	OPT
				SUS
21	58105-90J00	.BUSH	1	
22-1	58200-90J00	PROPELLER (3X14.25X18)	1	OPT
				SUS
22-2	58200-90J10	PROPELLER (3X14.25X20)	1	OPT
				SUS
22-3	58200-90J20	PROPELLER (3X14.25X22)	1	OPT
				SUS
22-4	58200-90J30	PROPELLER (3X14.25X24)	1	OPT
				SUS
23	58120-90J00	.BUSH	1	OPT
24	57632-87L01	STOPPER, PROPELLER BUSH	1	
25	57633-90J02	SPACER, PROPELLER NUT	1	
26	09141-18005	NUT	1	
27	09204-03003	COTTER PIN (D:3.6,L:25)	1	
28	09160-18028	WASHER (18.5X31X1)	1	
29	57630-90J00	KIT, PROPELLER NUT	1	OPT
30	25700-87L00	SEALING KIT, GEAR CASE	1	OPT
				NOT ILLUSTRATED

FIG.410A

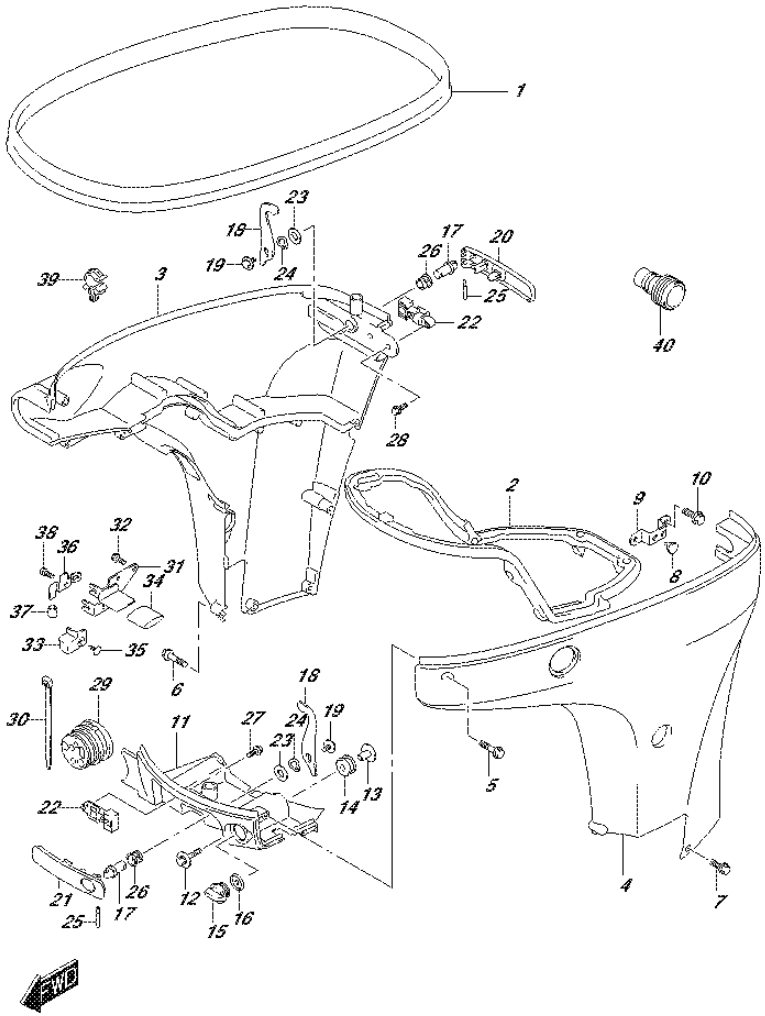

FIG.410A (2-F-7) SIDE COVER (DF70A E01)

REF NO.	PART NO.	DESCRIPTION	Q'TY	REMARKS
1	61112-99E01	RUBBER, SIDE COVER	1	
2	61134-87L00	SEAL, SIDE COVER	1	
3-1	61811-87L20-0EP	COVER, SIDE STBD (BLACK)	1	
3-2	61811-87L20-Y5S	COVER, SIDE STBD (WHITE)	1	
4-1	61821-87L21-0EP	COVER, SIDE PORT (BLACK)	1	
4-2	61821-87L21-Y5S	COVER, SIDE PORT (WHITE)	1	
5	09136-06148	SCREW (6X35)	8	
6	09136-06149	SCREW (6X55)	2	
7	09136-06161	SCREW (6X17)	3	
8	09321-08022	CUSHION	2	
9	61827-87L00	HOLDER, SIDE COVER	1	
10	01550-08207	BOLT	2	
11-1	61831-87L20-0EP	PANEL, FRONT (BLACK)	1	
11-2	61831-87L20-Y5S	PANEL, FRONT (WHITE)	1	
12	09116-08163	BOLT (8X40)	2	
13	09169-08039	WASHER	2	
14	09320-11013	CUSHION	2	
15	17913-93J00	PLUG, WATER	1	
16	17914-93J00	GASKET, WATER PLUG	1	
17	61632-93J00	SHAFT, ENGINE COVER HOOK	2	
18	61641-87L00	HOOK, ENGINE COVER	2	
19	09116-06127	BOLT (6X12)	2	
20	61633-87L00	LEVER, HOOK REAR	1	
21	61645-87L00	LEVER, HOOK FRONT	1	
22	61673-93J11	LATCH, HOOK LEVER	2	
23	09160-13014	WASHER (13.2X25X1)	2	
24	09164-14008	WASHER	2	
25	09202-04022	PIN	2	
26	09306-13007	BUSH	2	
27	01550-05107	BOLT	2	
28	01550-05167	BOLT	2	
29	61124-87L00	GROMMET, REMOCON CABLE	1	
30	09407-25402	CLAMP (L:250)	1	

FIG.410A

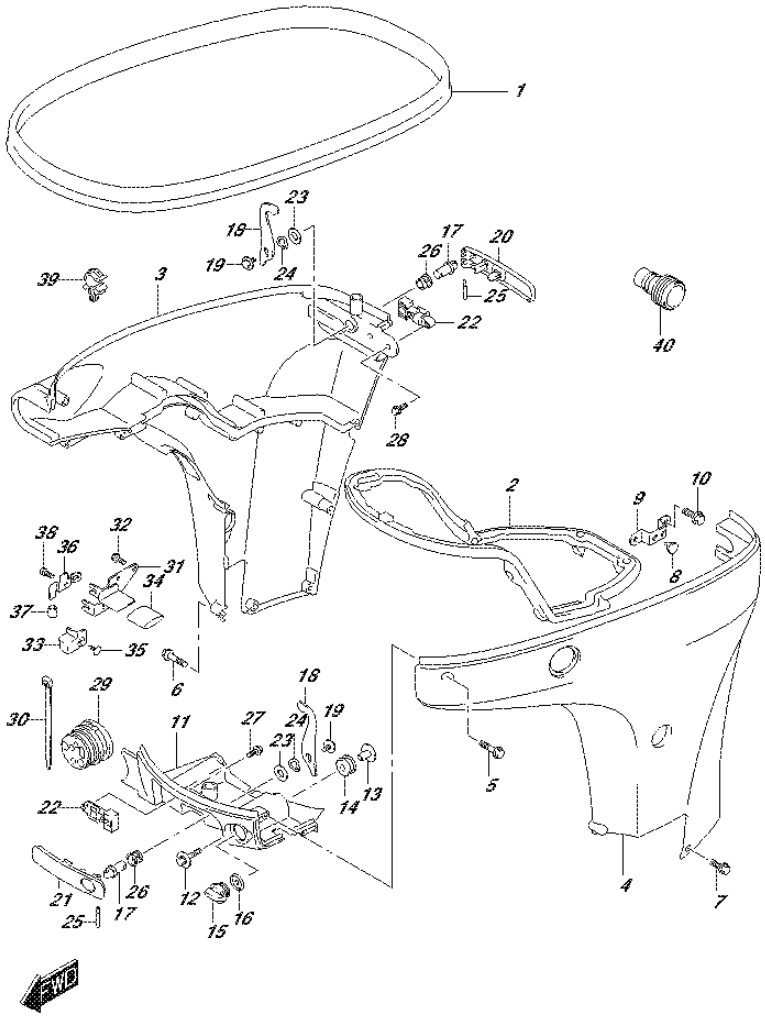

FIG.410A (2-F-8) SIDE COVER (DF70A E01)

REF NO.	PART NO.	DESCRIPTION	Q'TY	REMARKS
31	67341-87L00	HOLDER, REMOCON CABLE	1	
32	01550-06167	BOLT	2	
33	67345-87L00	PROTECTOR	1	
34	67346-87L00	PROTECTOR, HOLDER	1	
35	09409-10304-5ES	CLIP (BLACK)	1	
36	67350-87L00	STOPPER, REMOCON CABLE	1	
37	09352-70103-600	.HOSE (7X10.2X600)	2	L:600->14
38	01570-06127	BOLT	1	
39	09403-11320	CLAMP	1	
40	17917-87L00	CONNECTOR, FLUSH WATER	1	

FIG.410B

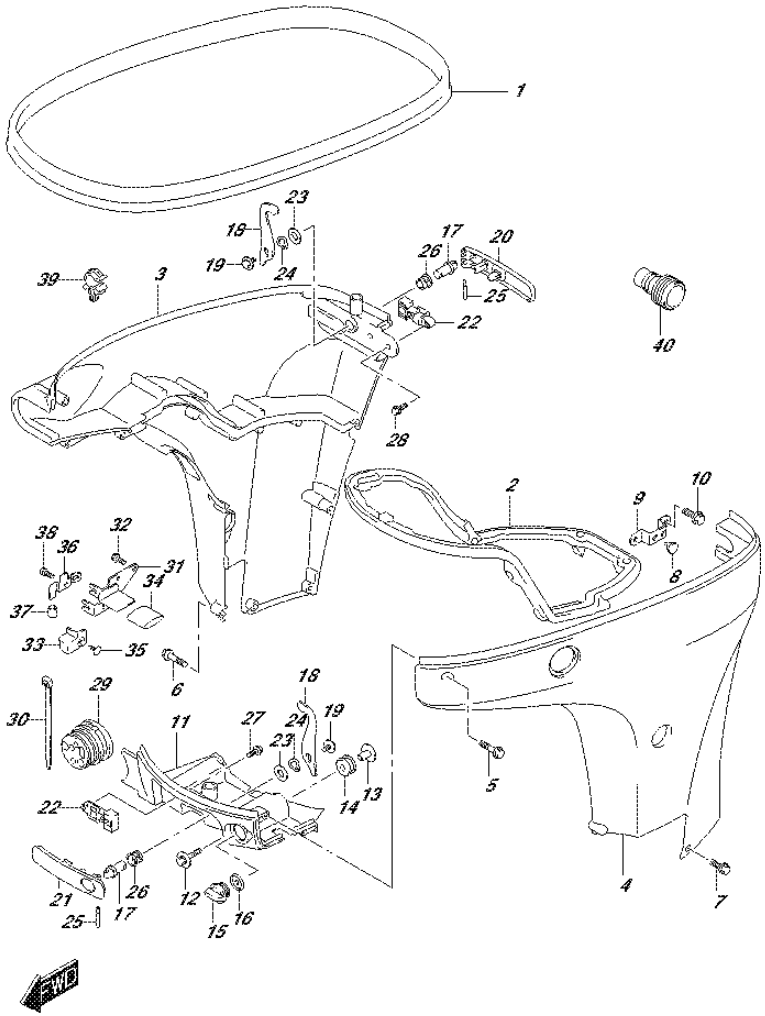

FIG.410B (2-F-9) SIDE COVER (DF70A E40)

REF NO.	PART NO.	DESCRIPTION	Q'TY	REMARKS
1	61112-99E01	RUBBER, SIDE COVER	1	
2	61134-87L00	SEAL, SIDE COVER	1	
3-1	61811-87L20-0EP	COVER, SIDE STBD (BLACK)	1	
3-2	61811-87L20-Y5S	COVER, SIDE STBD (WHITE)	1	
4-1	61821-87L21-0EP	COVER, SIDE PORT (BLACK)	1	
4-2	61821-87L21-Y5S	COVER, SIDE PORT (WHITE)	1	
5	09136-06148	SCREW (6X35)	8	
6	09136-06149	SCREW (6X55)	2	
7	09136-06161	SCREW (6X17)	3	
8	09321-08022	CUSHION	2	
9	61827-87L00	HOLDER, SIDE COVER	1	
10	01550-08207	BOLT	2	
11-1	61831-87L20-0EP	PANEL, FRONT (BLACK)	1	
11-2	61831-87L20-Y5S	PANEL, FRONT (WHITE)	1	
12	09116-08163	BOLT (8X40)	2	
13	09169-08039	WASHER	2	
14	09320-11013	CUSHION	2	
15	17913-93J00	PLUG, WATER	1	
16	17914-93J00	GASKET, WATER PLUG	1	
17	61632-93J00	SHAFT, ENGINE COVER HOOK	2	
18	61641-87L00	HOOK, ENGINE COVER	2	
19	09116-06127	BOLT (6X12)	2	
20	61633-87L00	LEVER, HOOK REAR	1	
21	61645-87L00	LEVER, HOOK FRONT	1	
22	61673-93J11	LATCH, HOOK LEVER	2	
23	09160-13014	WASHER (13.2X25X1)	2	
24	09164-14008	WASHER	2	
25	09202-04022	PIN	2	
26	09306-13007	BUSH	2	
27	01550-05107	BOLT	2	
28	01550-05167	BOLT	2	
29	61124-87L00	GROMMET, REMOCON CABLE	1	
30	09407-25402	CLAMP (L:250)	1	

FIG.410B

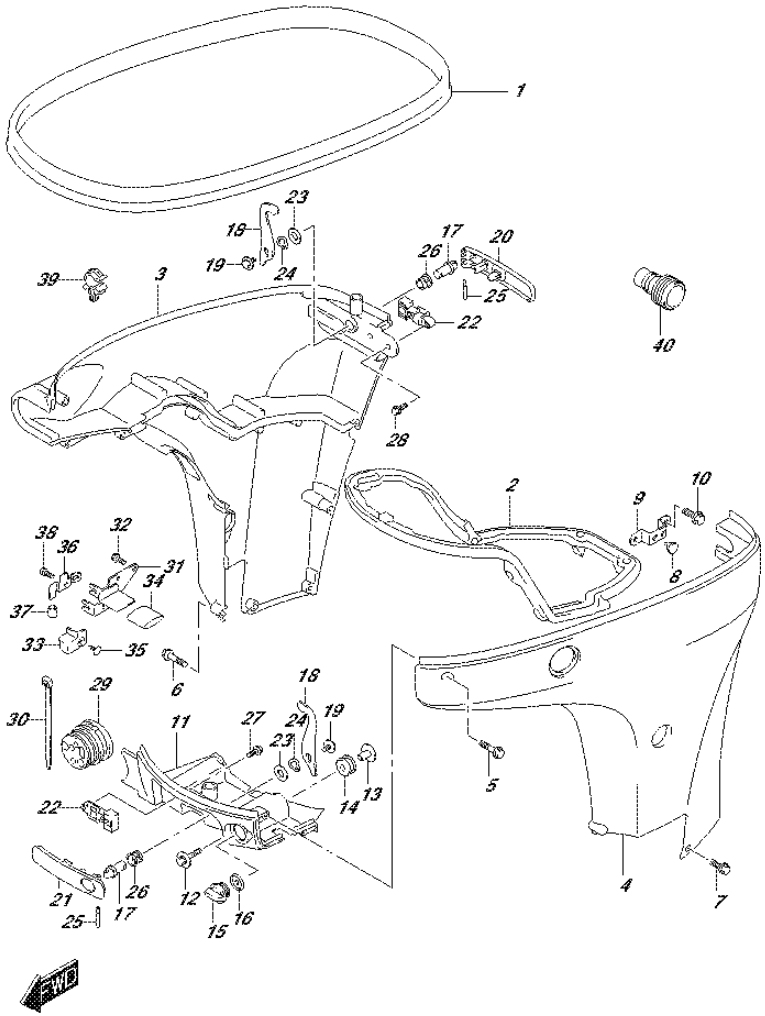

FIG.410B (2-F-10) SIDE COVER (DF70A E40)

REF NO.	PART NO.	DESCRIPTION	Q'TY	REMARKS
31	67341-87L00	HOLDER, REMOCON CABLE	1	
32	01550-06167	BOLT	2	
33	67345-87L00	PROTECTOR	1	
34	67346-87L00	PROTECTOR, HOLDER	1	
35	09409-10304-5ES	CLIP (BLACK)	1	
36	67350-87L00	STOPPER, REMOCON CABLE	1	
37	09352-70103-600	.HOSE (7X10.2X600)	2	L:600->14
38	01570-06127	BOLT	1	
39	09403-11320	CLAMP	1	
40	17917-87L00	CONNECTOR, FLUSH WATER	1	

FIG.410C

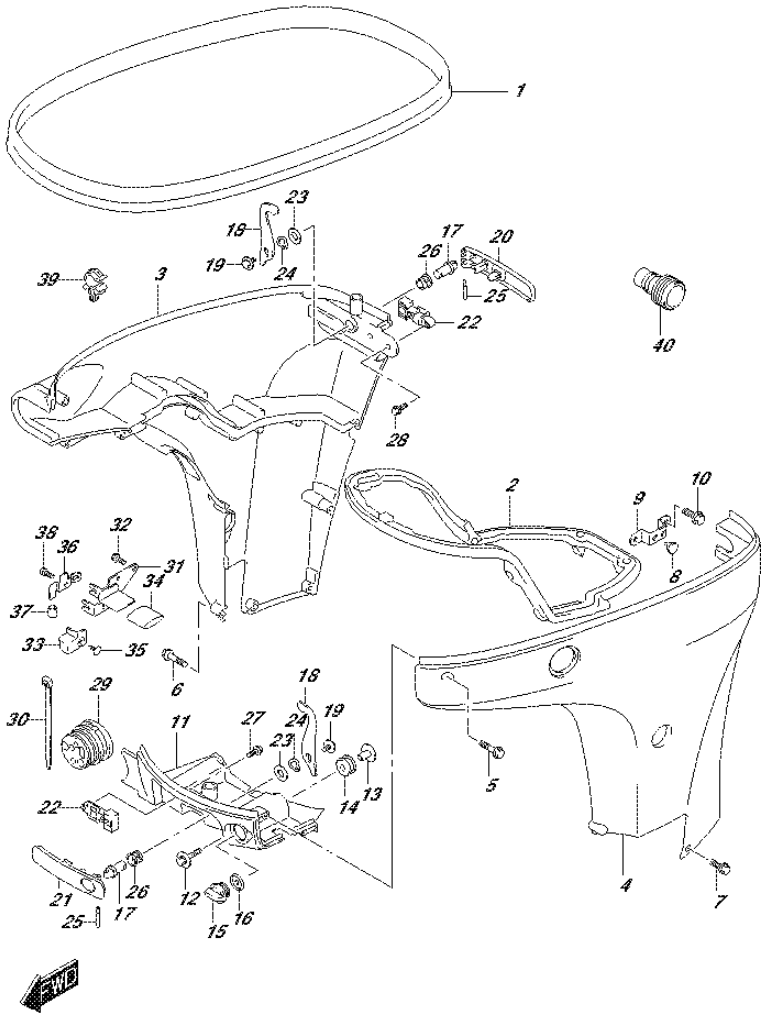

FIG.410C (2-F-11) SIDE COVER (DF70ATH E01)

REF NO.	PART NO.	DESCRIPTION	Q'TY	REMARKS
1	61112-99E01	RUBBER, SIDE COVER	1	
2	61134-87L00	SEAL, SIDE COVER	1	
3	61811-87L20-0EP	COVER, SIDE STBD (BLACK)	1	
4	61821-87L21-0EP	COVER, SIDE PORT (BLACK)	1	
5	09136-06148	SCREW (6X35)	8	
6	09136-06149	SCREW (6X55)	2	
7	09136-06161	SCREW (6X17)	3	
8	09321-08022	CUSHION	2	
9	61827-87L00	HOLDER, SIDE COVER	1	
10	01550-08207	BOLT	2	
11	61831-87L20-0EP	PANEL, FRONT (BLACK)	1	
12	09116-08163	BOLT (8X40)	2	
13	09169-08039	WASHER	2	
14	09320-11013	CUSHION	2	
15	17913-93J00	PLUG, WATER	1	
16	17914-93J00	GASKET, WATER PLUG	1	
17	61632-93J00	SHAFT, ENGINE COVER HOOK	2	
18	61641-87L00	HOOK, ENGINE COVER	2	
19	09116-06127	BOLT (6X12)	2	
20	61633-87L00	LEVER, HOOK REAR	1	
21	61645-87L00	LEVER, HOOK FRONT	1	
22	61673-93J11	LATCH, HOOK LEVER	2	
23	09160-13014	WASHER (13.2X25X1)	2	
24	09164-14008	WASHER	2	
25	09202-04022	PIN	2	
26	09306-13007	BUSH	2	
27	01550-05107	BOLT	2	
28	01550-05167	BOLT	2	
29	61124-87L00	GROMMET, REMOCON CABLE	1	
30	09407-25402	CLAMP (L:250)	1	

FIG.410C

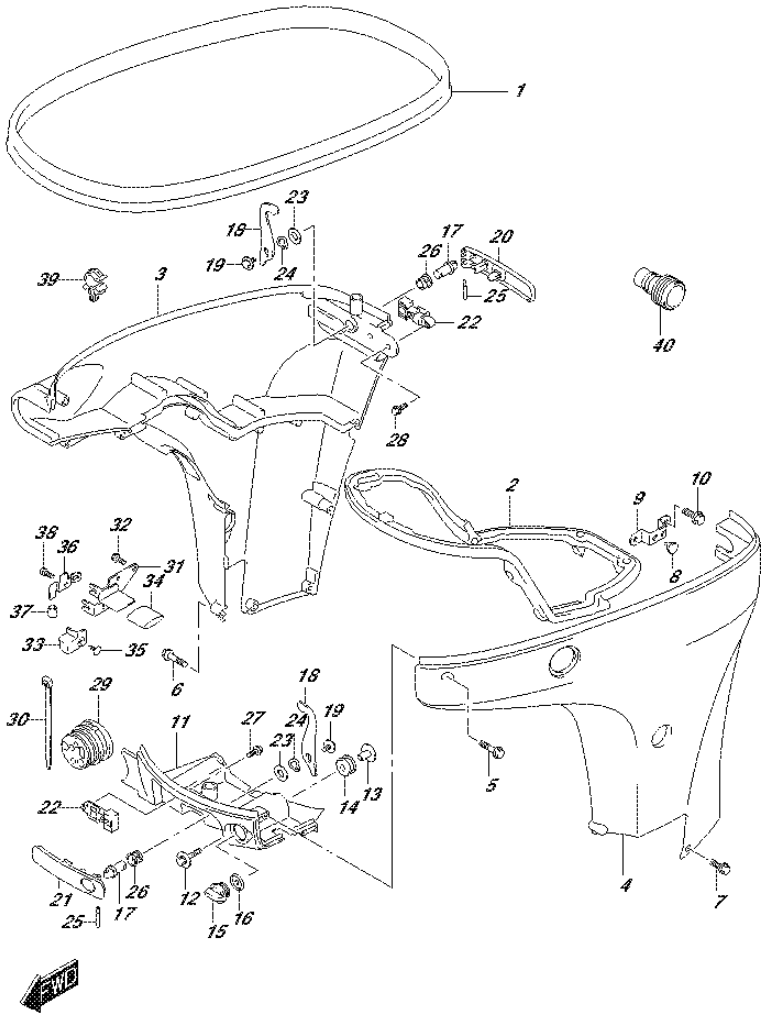

FIG.410C (2-F-12) SIDE COVER (DF70ATH E01)

REF NO.	PART NO.	DESCRIPTION	Q'TY	REMARKS
31	67341-87L00	HOLDER, REMOCON CABLE	1	
32	01550-06167	BOLT	2	
33	67345-87L00	PROTECTOR	1	
34	67346-87L00	PROTECTOR, HOLDER	1	
35	09409-10304-5ES	CLIP (BLACK)	1	
36	67350-87L00	STOPPER, REMOCON CABLE	1	
37	09352-70103-600	.HOSE (7X10.2X600)	2	L:600->14
38	01570-06127	BOLT	1	
39	09403-11320	CLAMP	1	
40	17917-87L00	CONNECTOR, FLUSH WATER	1	

FIG.410D

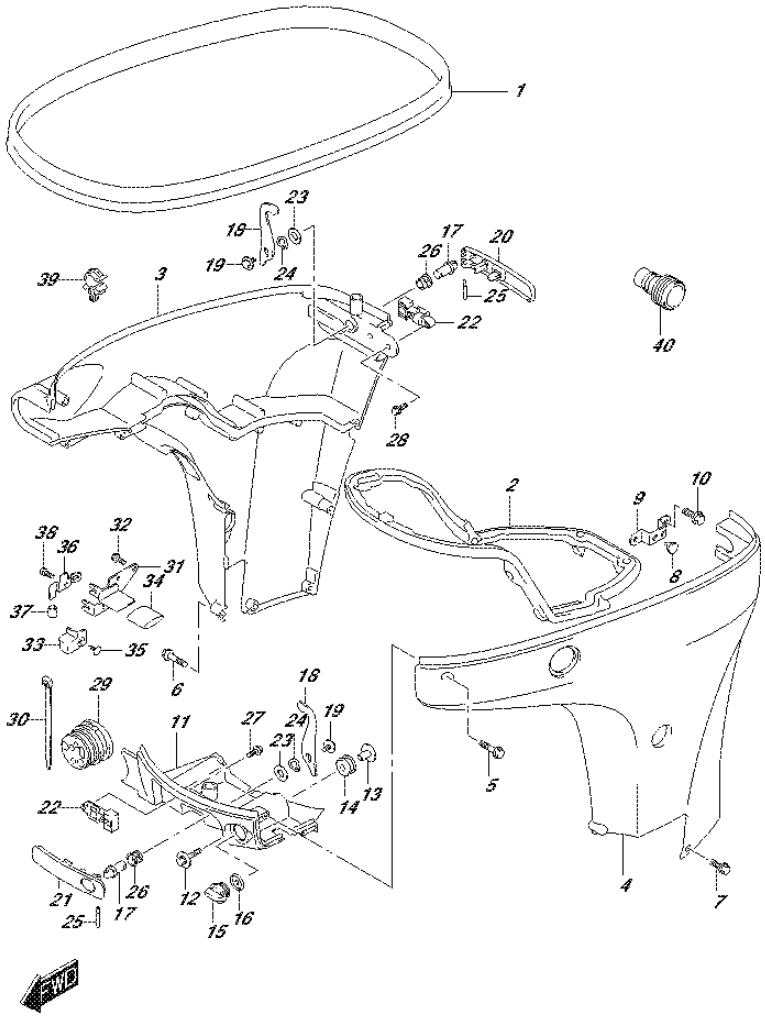

FIG.410D (2-F-13) SIDE COVER (DF70ATH E40)

REF NO.	PART NO.	DESCRIPTION	Q'TY	REMARKS
1	61112-99E01	RUBBER, SIDE COVER	1	
2	61134-87L00	SEAL, SIDE COVER	1	
3	61811-87L20-0EP	COVER, SIDE STBD (BLACK)	1	
4	61821-87L21-0EP	COVER, SIDE PORT (BLACK)	1	
5	09136-06148	SCREW (6X35)	8	
6	09136-06149	SCREW (6X55)	2	
7	09136-06161	SCREW (6X17)	3	
8	09321-08022	CUSHION	2	
9	61827-87L00	HOLDER, SIDE COVER	1	
10	01550-08207	BOLT	2	
11	61831-87L20-0EP	PANEL, FRONT (BLACK)	1	
12	09116-08163	BOLT (8X40)	2	
13	09169-08039	WASHER	2	
14	09320-11013	CUSHION	2	
15	17913-93J00	PLUG, WATER	1	
16	17914-93J00	GASKET, WATER PLUG	1	
17	61632-93J00	SHAFT, ENGINE COVER HOOK	2	
18	61641-87L00	HOOK, ENGINE COVER	2	
19	09116-06127	BOLT (6X12)	2	
20	61633-87L00	LEVER, HOOK REAR	1	
21	61645-87L00	LEVER, HOOK FRONT	1	
22	61673-93J11	LATCH, HOOK LEVER	2	
23	09160-13014	WASHER (13.2X25X1)	2	
24	09164-14008	WASHER	2	
25	09202-04022	PIN	2	
26	09306-13007	BUSH	2	
27	01550-05107	BOLT	2	
28	01550-05167	BOLT	2	
29	61124-87L00	GROMMET, REMOCON CABLE	1	
30	09407-25402	CLAMP (L:250)	1	

FIG.410D

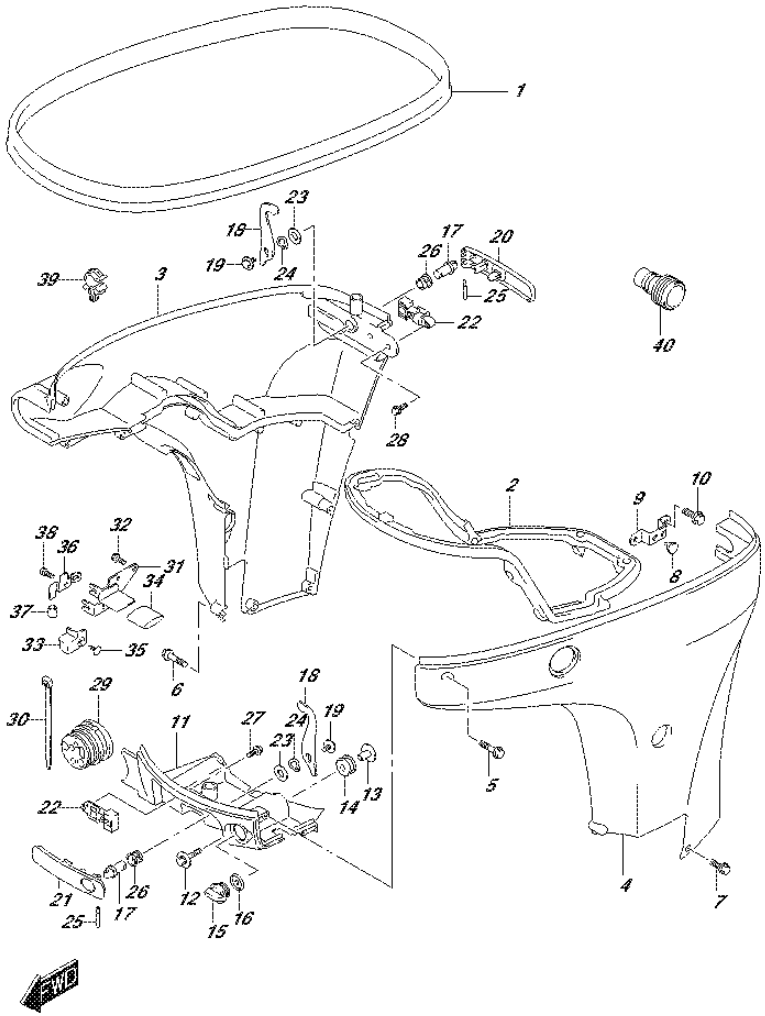

FIG.410D (2-F-14) SIDE COVER (DF70ATH E40)

REF NO.	PART NO.	DESCRIPTION	Q'TY	REMARKS
31	67341-87L00	HOLDER, REMOCON CABLE	1	
32	01550-06167	BOLT	2	
33	67345-87L00	PROTECTOR	1	
34	67346-87L00	PROTECTOR, HOLDER	1	
35	09409-10304-5ES	CLIP (BLACK)	1	
36	67350-87L00	STOPPER, REMOCON CABLE	1	
37	09352-70103-600	.HOSE (7X10.2X600)	2	L:600->14
38	01570-06127	BOLT	1	
39	09403-11320	CLAMP	1	
40	17917-87L00	CONNECTOR, FLUSH WATER	1	

FIG.410E

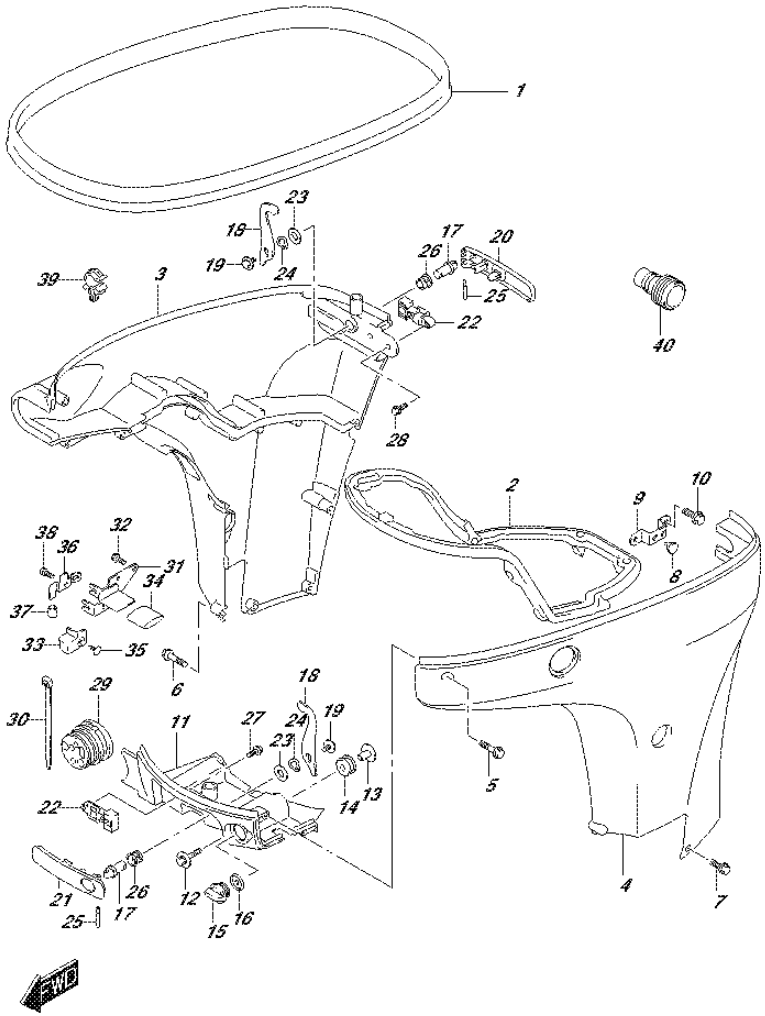

FIG.410E (2-F-15) SIDE COVER (DF80A E01)

REF NO.	PART NO.	DESCRIPTION	Q'TY	REMARKS
1	61112-99E01	RUBBER, SIDE COVER	1	
2	61134-87L00	SEAL, SIDE COVER	1	
3	61811-87L20-0EP	COVER, SIDE STBD (BLACK)	1	
4	61821-87L21-0EP	COVER, SIDE PORT (BLACK)	1	
5	09136-06148	SCREW (6X35)	8	
6	09136-06149	SCREW (6X55)	2	
7	09136-06161	SCREW (6X17)	3	
8	09321-08022	CUSHION	2	
9	61827-87L00	HOLDER, SIDE COVER	1	
10	01550-08207	BOLT	2	
11	61831-87L20-0EP	PANEL, FRONT (BLACK)	1	
12	09116-08163	BOLT (8X40)	2	
13	09169-08039	WASHER	2	
14	09320-11013	CUSHION	2	
15	17913-93J00	PLUG, WATER	1	
16	17914-93J00	GASKET, WATER PLUG	1	
17	61632-93J00	SHAFT, ENGINE COVER HOOK	2	
18	61641-87L00	HOOK, ENGINE COVER	2	
19	09116-06127	BOLT (6X12)	2	
20	61633-87L00	LEVER, HOOK REAR	1	
21	61645-87L00	LEVER, HOOK FRONT	1	
22	61673-93J11	LATCH, HOOK LEVER	2	
23	09160-13014	WASHER (13.2X25X1)	2	
24	09164-14008	WASHER	2	
25	09202-04022	PIN	2	
26	09306-13007	BUSH	2	
27	01550-05107	BOLT	2	
28	01550-05167	BOLT	2	
29	61124-87L00	GROMMET, REMOCON CABLE	1	
30	09407-25402	CLAMP (L:250)	1	

FIG.410E

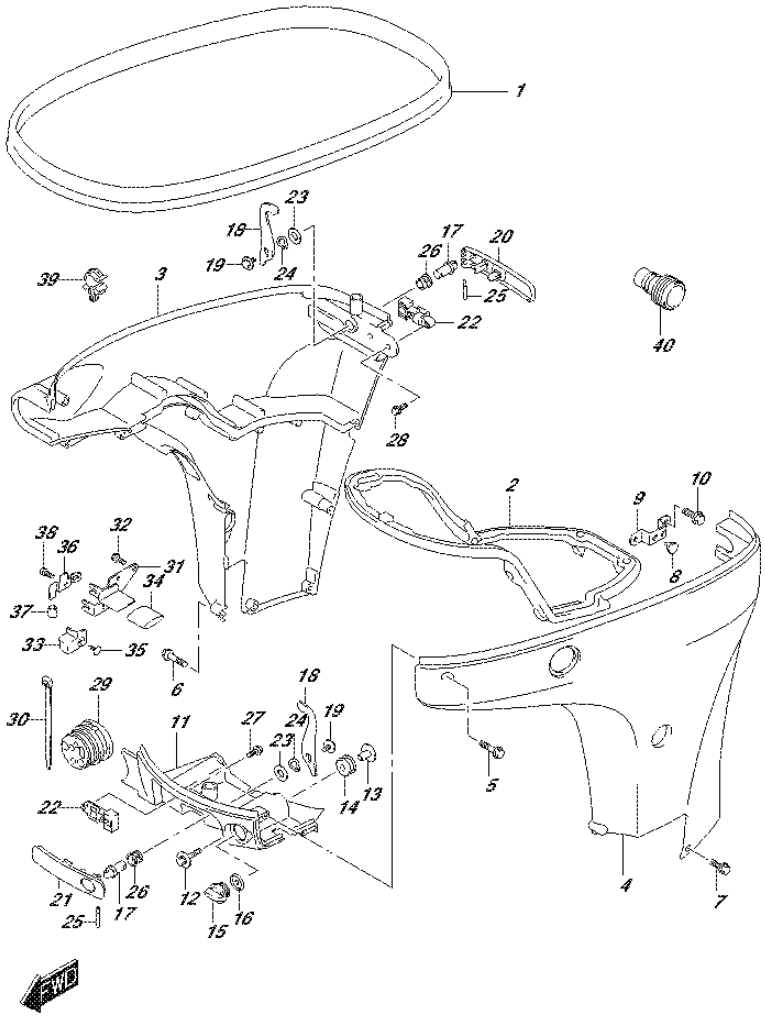

FIG.410E (2-G-2) SIDE COVER (DF80A E01)

REF NO.	PART NO.	DESCRIPTION	Q'TY	REMARKS
31	67341-87L00	HOLDER, REMOCON CABLE	1	
32	01550-06167	BOLT	2	
33	67345-87L00	PROTECTOR	1	
34	67346-87L00	PROTECTOR, HOLDER	1	
35	09409-10304-5ES	CLIP (BLACK)	1	
36	67350-87L00	STOPPER, REMOCON CABLE	1	
37	09352-70103-600	.HOSE (7X10.2X600)	2	L:600->14
38	01570-06127	BOLT	1	
39	09403-11320	CLAMP	1	
40	17917-87L00	CONNECTOR, FLUSH WATER	1	

FIG.410F

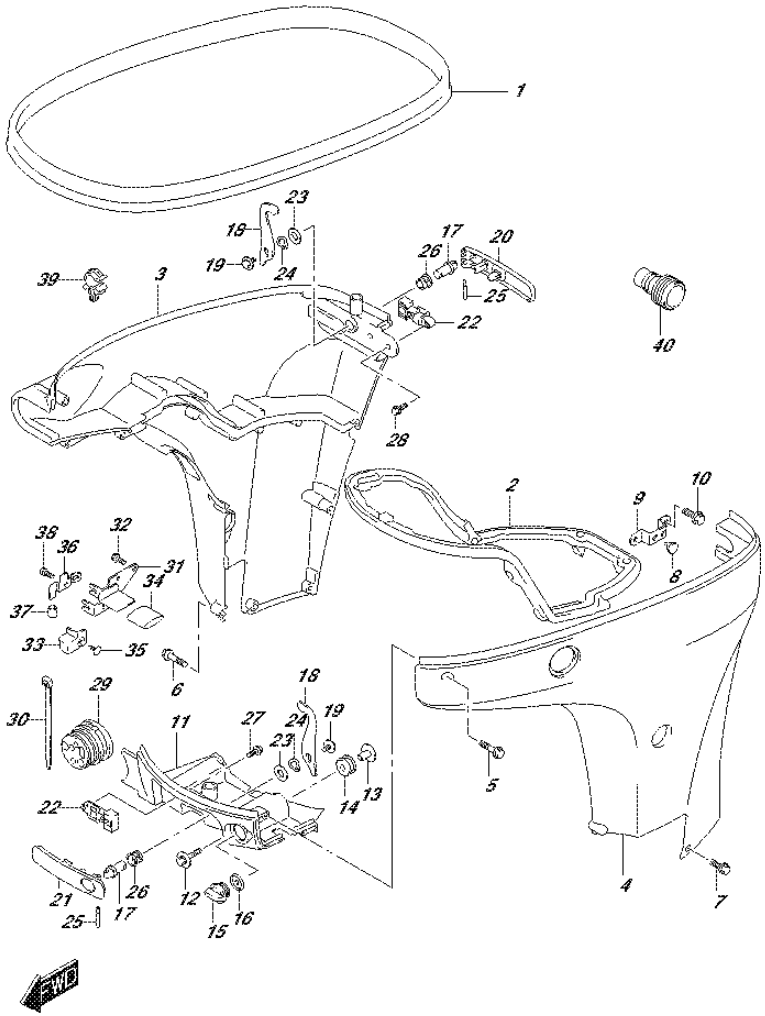

FIG.410F (2-G-3) SIDE COVER (DF80A E40)

REF NO.	PART NO.	DESCRIPTION	Q'TY	REMARKS
1	61112-99E01	RUBBER, SIDE COVER	1	
2	61134-87L00	SEAL, SIDE COVER	1	
3	61811-87L20-0EP	COVER, SIDE STBD (BLACK)	1	
4	61821-87L21-0EP	COVER, SIDE PORT (BLACK)	1	
5	09136-06148	SCREW (6X35)	8	
6	09136-06149	SCREW (6X55)	2	
7	09136-06161	SCREW (6X17)	3	
8	09321-08022	CUSHION	2	
9	61827-87L00	HOLDER, SIDE COVER	1	
10	01550-08207	BOLT	2	
11	61831-87L20-0EP	PANEL, FRONT (BLACK)	1	
12	09116-08163	BOLT (8X40)	2	
13	09169-08039	WASHER	2	
14	09320-11013	CUSHION	2	
15	17913-93J00	PLUG, WATER	1	
16	17914-93J00	GASKET, WATER PLUG	1	
17	61632-93J00	SHAFT, ENGINE COVER HOOK	2	
18	61641-87L00	HOOK, ENGINE COVER	2	
19	09116-06127	BOLT (6X12)	2	
20	61633-87L00	LEVER, HOOK REAR	1	
21	61645-87L00	LEVER, HOOK FRONT	1	
22	61673-93J11	LATCH, HOOK LEVER	2	
23	09160-13014	WASHER (13.2X25X1)	2	
24	09164-14008	WASHER	2	
25	09202-04022	PIN	2	
26	09306-13007	BUSH	2	
27	01550-05107	BOLT	2	
28	01550-05167	BOLT	2	
29	61124-87L00	GROMMET, REMOCON CABLE	1	
30	09407-25402	CLAMP (L:250)	1	

FIG.410F

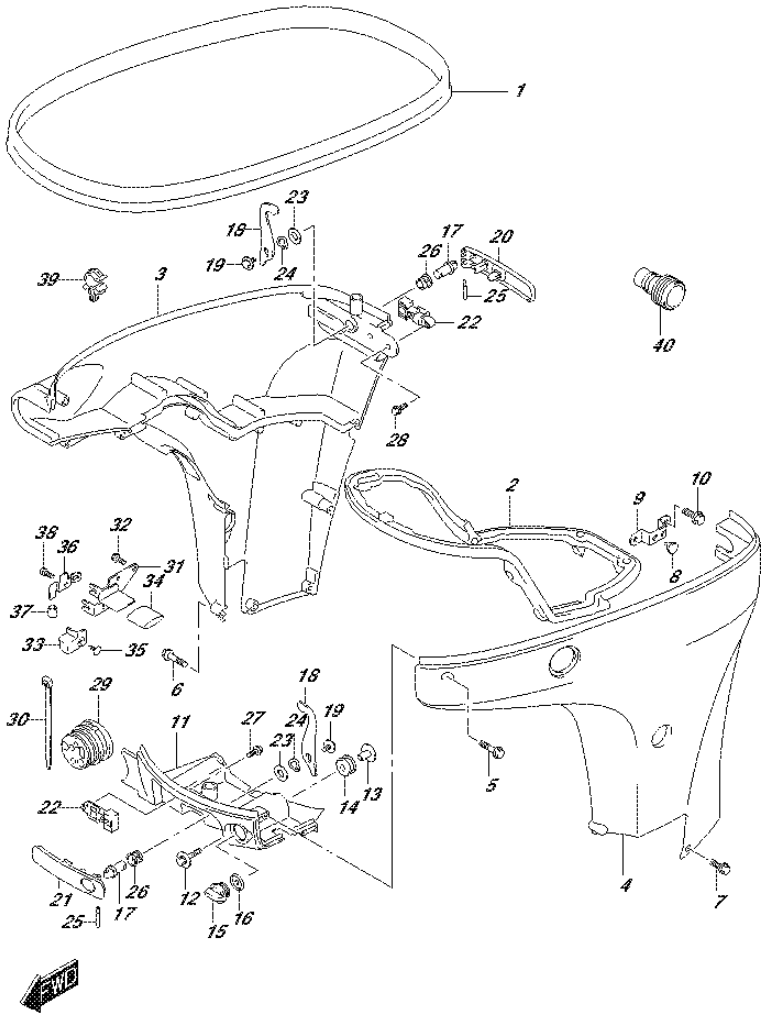

FIG.410F (2-G-4) SIDE COVER (DF80A E40)

REF NO.	PART NO.	DESCRIPTION	Q'TY	REMARKS
31	67341-87L00	HOLDER, REMOCON CABLE	1	
32	01550-06167	BOLT	2	
33	67345-87L00	PROTECTOR	1	
34	67346-87L00	PROTECTOR, HOLDER	1	
35	09409-10304-5ES	CLIP (BLACK)	1	
36	67350-87L00	STOPPER, REMOCON CABLE	1	
37	09352-70103-600	.HOSE (7X10.2X600)	2	L:600->14
38	01570-06127	BOLT	1	
39	09403-11320	CLAMP	1	
40	17917-87L00	CONNECTOR, FLUSH WATER	1	

FIG.410G

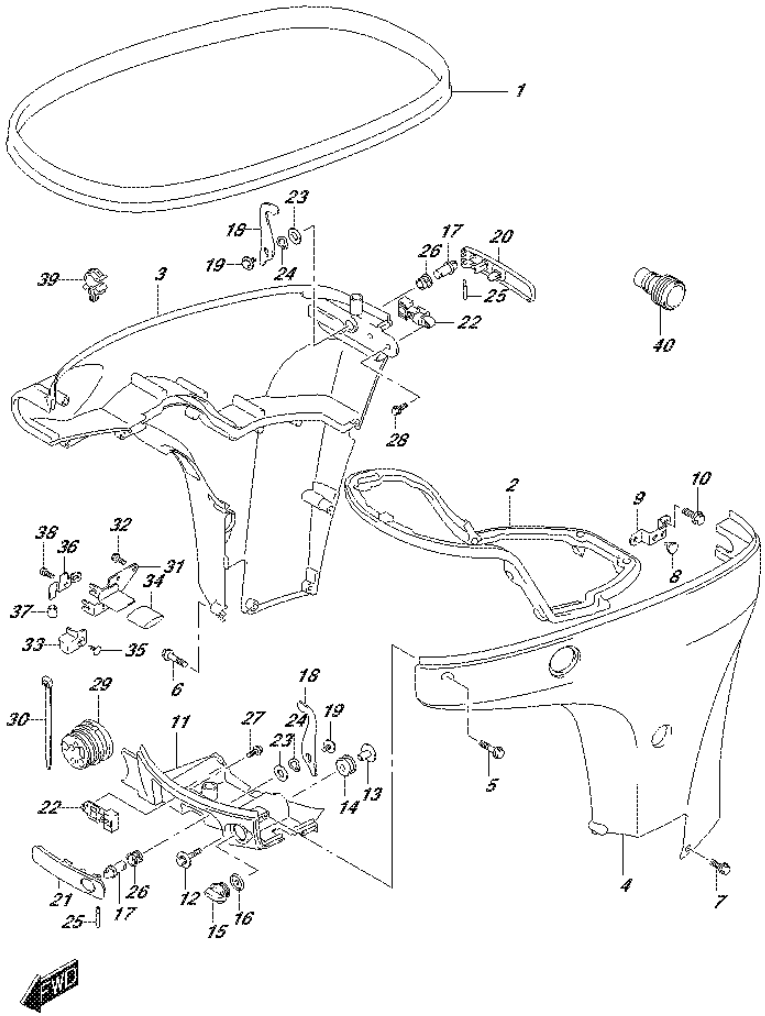

FIG.410G (2-G-5) SIDE COVER (DF90A E01)

REF NO.	PART NO.	DESCRIPTION	Q'TY	REMARKS
1	61112-99E01	RUBBER, SIDE COVER	1	
2	61134-87L00	SEAL, SIDE COVER	1	
3-1	61811-87L20-0EP	COVER, SIDE STBD (BLACK)	1	
3-2	61811-87L20-Y5S	COVER, SIDE STBD (WHITE)	1	
4-1	61821-87L21-0EP	COVER, SIDE PORT (BLACK)	1	
4-2	61821-87L21-Y5S	COVER, SIDE PORT (WHITE)	1	
5	09136-06148	SCREW (6X35)	8	
6	09136-06149	SCREW (6X55)	2	
7	09136-06161	SCREW (6X17)	3	
8	09321-08022	CUSHION	2	
9	61827-87L00	HOLDER, SIDE COVER	1	
10	01550-08207	BOLT	2	
11-1	61831-87L20-0EP	PANEL, FRONT (BLACK)	1	
11-2	61831-87L20-Y5S	PANEL, FRONT (WHITE)	1	
12	09116-08163	BOLT (8X40)	2	
13	09169-08039	WASHER	2	
14	09320-11013	CUSHION	2	
15	17913-93J00	PLUG, WATER	1	
16	17914-93J00	GASKET, WATER PLUG	1	
17	61632-93J00	SHAFT, ENGINE COVER HOOK	2	
18	61641-87L00	HOOK, ENGINE COVER	2	
19	09116-06127	BOLT (6X12)	2	
20	61633-87L00	LEVER, HOOK REAR	1	
21	61645-87L00	LEVER, HOOK FRONT	1	
22	61673-93J11	LATCH, HOOK LEVER	2	
23	09160-13014	WASHER (13.2X25X1)	2	
24	09164-14008	WASHER	2	
25	09202-04022	PIN	2	
26	09306-13007	BUSH	2	
27	01550-05107	BOLT	2	
28	01550-05167	BOLT	2	
29	61124-87L00	GROMMET, REMOCON CABLE	1	
30	09407-25402	CLAMP (L:250)	1	

FIG.410G

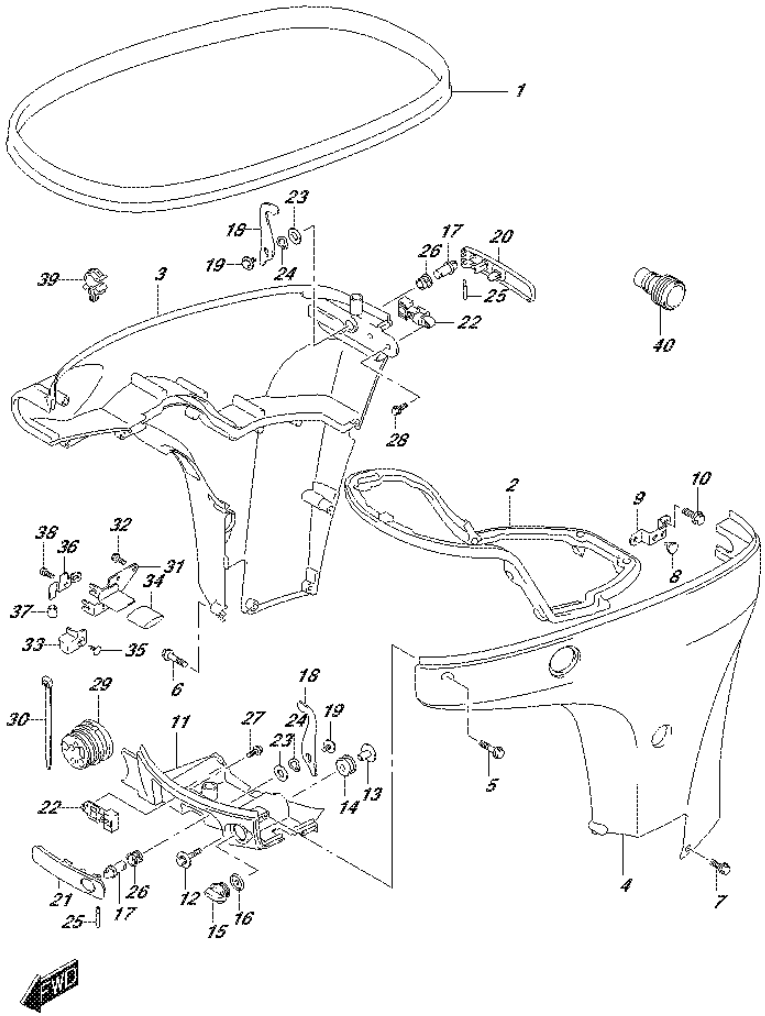

FIG.410G (2-G-6) SIDE COVER (DF90A E01)

REF NO.	PART NO.	DESCRIPTION	Q'TY	REMARKS
31	67341-87L00	HOLDER, REMOCON CABLE	1	
32	01550-06167	BOLT	2	
33	67345-87L00	PROTECTOR	1	
34	67346-87L00	PROTECTOR, HOLDER	1	
35	09409-10304-5ES	CLIP (BLACK)	1	
36	67350-87L00	STOPPER, REMOCON CABLE	1	
37	09352-70103-600	.HOSE (7X10.2X600)	2	L:600->14
38	01570-06127	BOLT	1	
39	09403-11320	CLAMP	1	
40	17917-87L00	CONNECTOR, FLUSH WATER	1	

FIG.410H

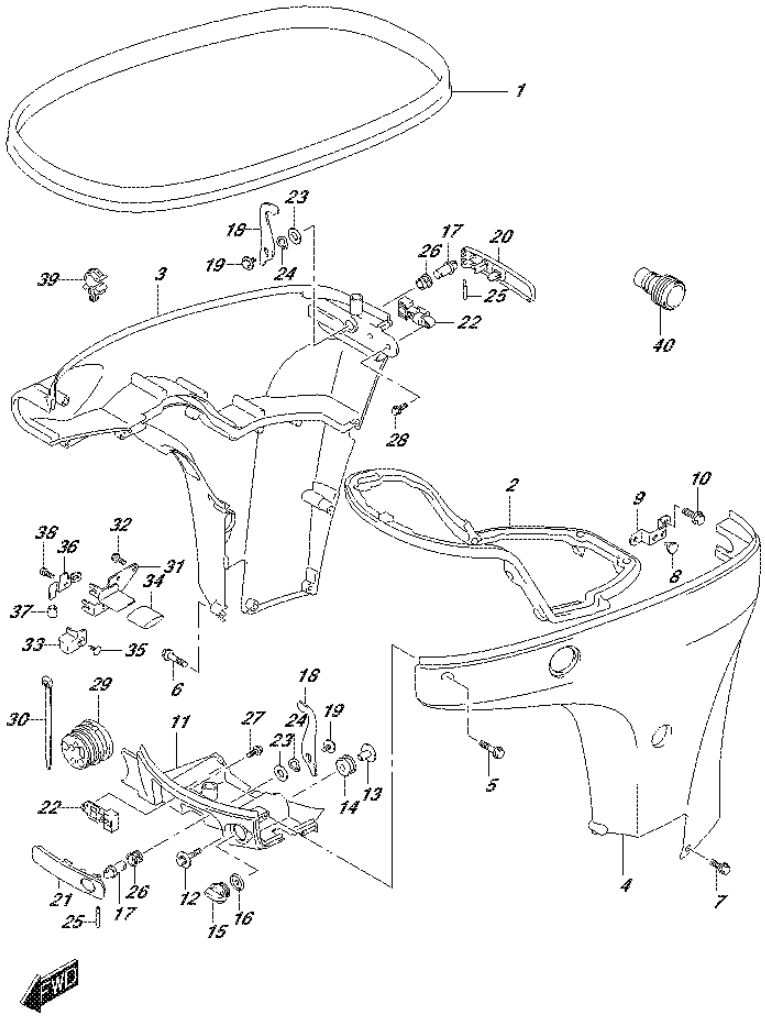

FIG.410H (2-G-7) SIDE COVER (DF90A E40)

REF NO.	PART NO.	DESCRIPTION	Q'TY	REMARKS
1	61112-99E01	RUBBER, SIDE COVER	1	
2	61134-87L00	SEAL, SIDE COVER	1	
3-1	61811-87L20-0EP	COVER, SIDE STBD (BLACK)	1	
3-2	61811-87L20-Y5S	COVER, SIDE STBD (WHITE)	1	
4-1	61821-87L21-0EP	COVER, SIDE PORT (BLACK)	1	
4-2	61821-87L21-Y5S	COVER, SIDE PORT (WHITE)	1	
5	09136-06148	SCREW (6X35)	8	
6	09136-06149	SCREW (6X55)	2	
7	09136-06161	SCREW (6X17)	3	
8	09321-08022	CUSHION	2	
9	61827-87L00	HOLDER, SIDE COVER	1	
10	01550-08207	BOLT	2	
11-1	61831-87L20-0EP	PANEL, FRONT (BLACK)	1	
11-2	61831-87L20-Y5S	PANEL, FRONT (WHITE)	1	
12	09116-08163	BOLT (8X40)	2	
13	09169-08039	WASHER	2	
14	09320-11013	CUSHION	2	
15	17913-93J00	PLUG, WATER	1	
16	17914-93J00	GASKET, WATER PLUG	1	
17	61632-93J00	SHAFT, ENGINE COVER HOOK	2	
18	61641-87L00	HOOK, ENGINE COVER	2	
19	09116-06127	BOLT (6X12)	2	
20	61633-87L00	LEVER, HOOK REAR	1	
21	61645-87L00	LEVER, HOOK FRONT	1	
22	61673-93J11	LATCH, HOOK LEVER	2	
23	09160-13014	WASHER (13.2X25X1)	2	
24	09164-14008	WASHER	2	
25	09202-04022	PIN	2	
26	09306-13007	BUSH	2	
27	01550-05107	BOLT	2	
28	01550-05167	BOLT	2	
29	61124-87L00	GROMMET, REMOCON CABLE	1	
30	09407-25402	CLAMP (L:250)	1	

FIG.410H

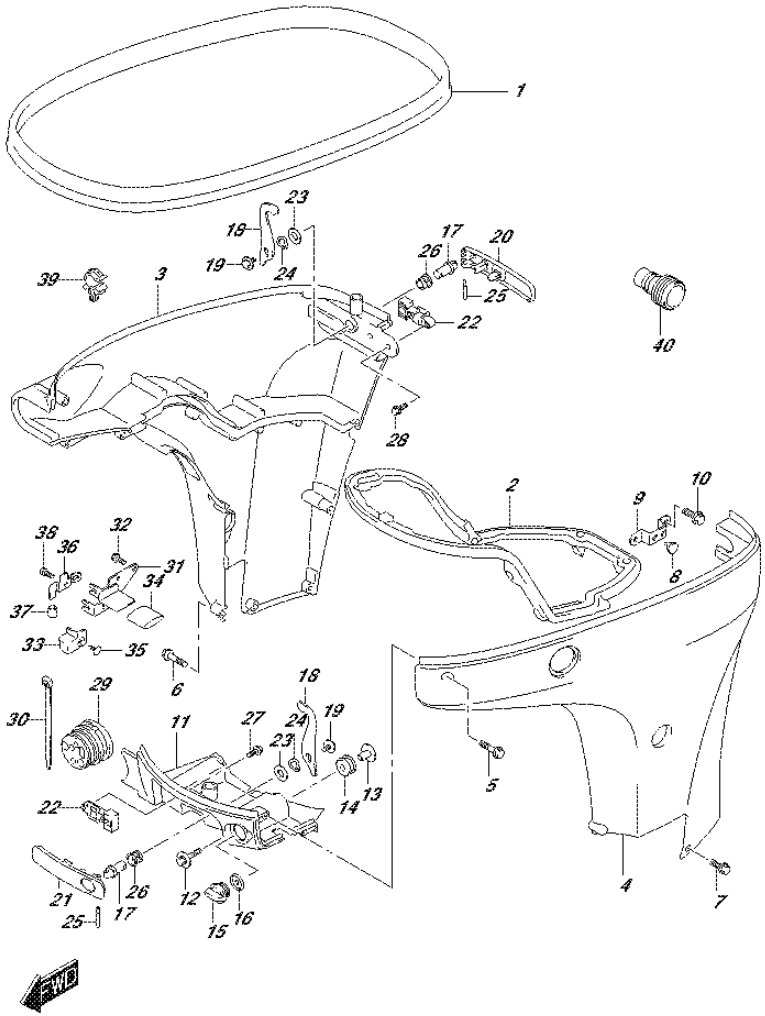

FIG.410H (2-G-8) SIDE COVER (DF90A E40)

REF NO.	PART NO.	DESCRIPTION	Q'TY	REMARKS
31	67341-87L00	HOLDER, REMOCON CABLE	1	
32	01550-06167	BOLT	2	
33	67345-87L00	PROTECTOR	1	
34	67346-87L00	PROTECTOR, HOLDER	1	
35	09409-10304-5ES	CLIP (BLACK)	1	
36	67350-87L00	STOPPER, REMOCON CABLE	1	
37	09352-70103-600	.HOSE (7X10.2X600)	2	L:600->14
38	01570-06127	BOLT	1	
39	09403-11320	CLAMP	1	
40	17917-87L00	CONNECTOR, FLUSH WATER	1	

FIG.410J

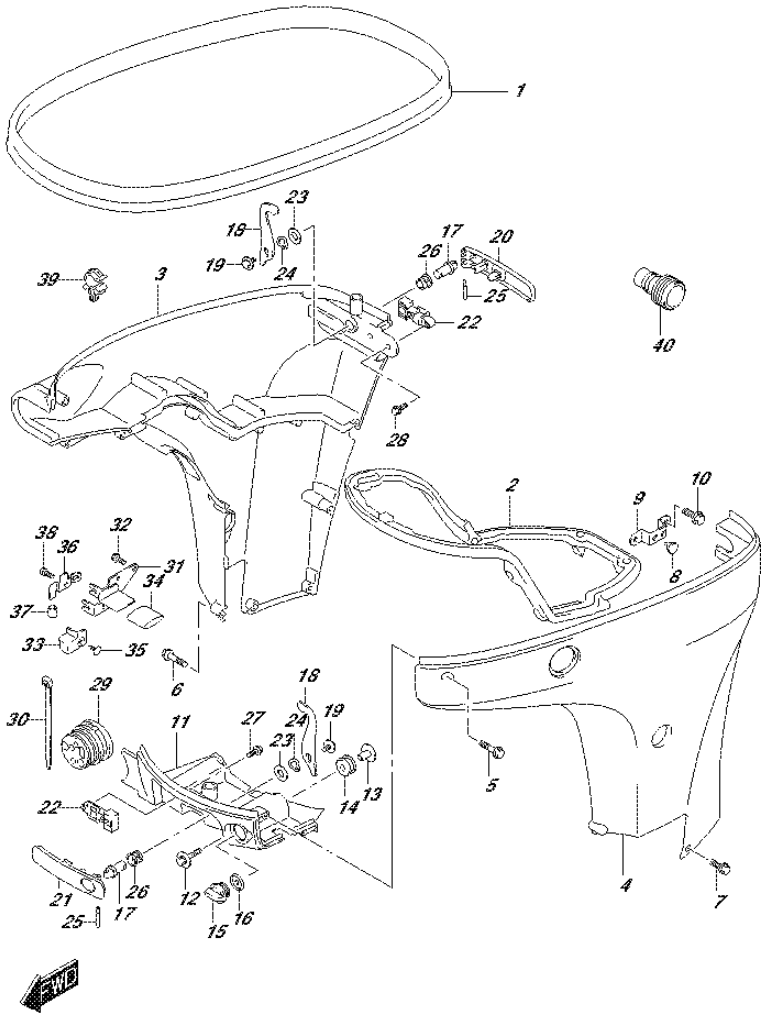

FIG.410J (2-G-9) SIDE COVER (DF90ATH E01)

REF NO.	PART NO.	DESCRIPTION	Q'TY	REMARKS
1	61112-99E01	RUBBER, SIDE COVER	1	
2	61134-87L00	SEAL, SIDE COVER	1	
3	61811-87L20-0EP	COVER, SIDE STBD (BLACK)	1	
4	61821-87L21-0EP	COVER, SIDE PORT (BLACK)	1	
5	09136-06148	SCREW (6X35)	8	
6	09136-06149	SCREW (6X55)	2	
7	09136-06161	SCREW (6X17)	3	
8	09321-08022	CUSHION	2	
9	61827-87L00	HOLDER, SIDE COVER	1	
10	01550-08207	BOLT	2	
11	61831-87L20-0EP	PANEL, FRONT (BLACK)	1	
12	09116-08163	BOLT (8X40)	2	
13	09169-08039	WASHER	2	
14	09320-11013	CUSHION	2	
15	17913-93J00	PLUG, WATER	1	
16	17914-93J00	GASKET, WATER PLUG	1	
17	61632-93J00	SHAFT, ENGINE COVER HOOK	2	
18	61641-87L00	HOOK, ENGINE COVER	2	
19	09116-06127	BOLT (6X12)	2	
20	61633-87L00	LEVER, HOOK REAR	1	
21	61645-87L00	LEVER, HOOK FRONT	1	
22	61673-93J11	LATCH, HOOK LEVER	2	
23	09160-13014	WASHER (13.2X25X1)	2	
24	09164-14008	WASHER	2	
25	09202-04022	PIN	2	
26	09306-13007	BUSH	2	
27	01550-05107	BOLT	2	
28	01550-05167	BOLT	2	
29	61124-87L00	GROMMET, REMOCON CABLE	1	
30	09407-25402	CLAMP (L:250)	1	

FIG.410J

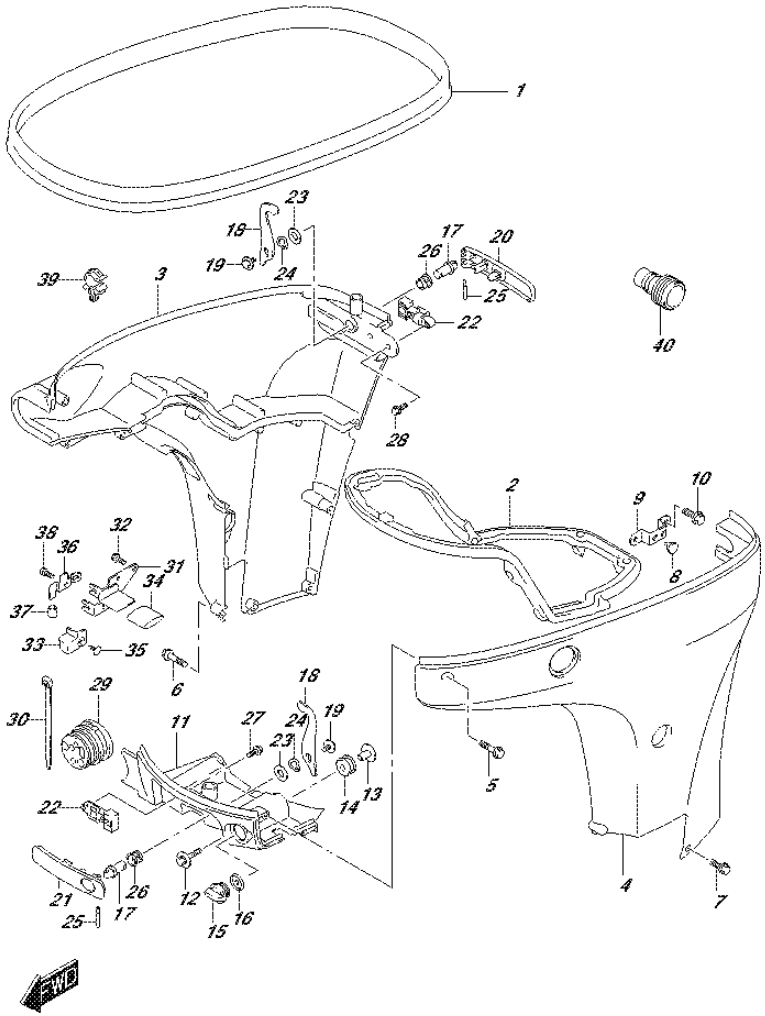

FIG.410J (2-G-10) SIDE COVER (DF90ATH E01)

REF NO.	PART NO.	DESCRIPTION	Q'TY	REMARKS
31	67341-87L00	HOLDER, REMOCON CABLE	1	
32	01550-06167	BOLT	2	
33	67345-87L00	PROTECTOR	1	
34	67346-87L00	PROTECTOR, HOLDER	1	
35	09409-10304-5ES	CLIP (BLACK)	1	
36	67350-87L00	STOPPER, REMOCON CABLE	1	
37	09352-70103-600	.HOSE (7X10.2X600)	2	L:600->14
38	01570-06127	BOLT	1	
39	09403-11320	CLAMP	1	
40	17917-87L00	CONNECTOR, FLUSH WATER	1	

FIG.410K

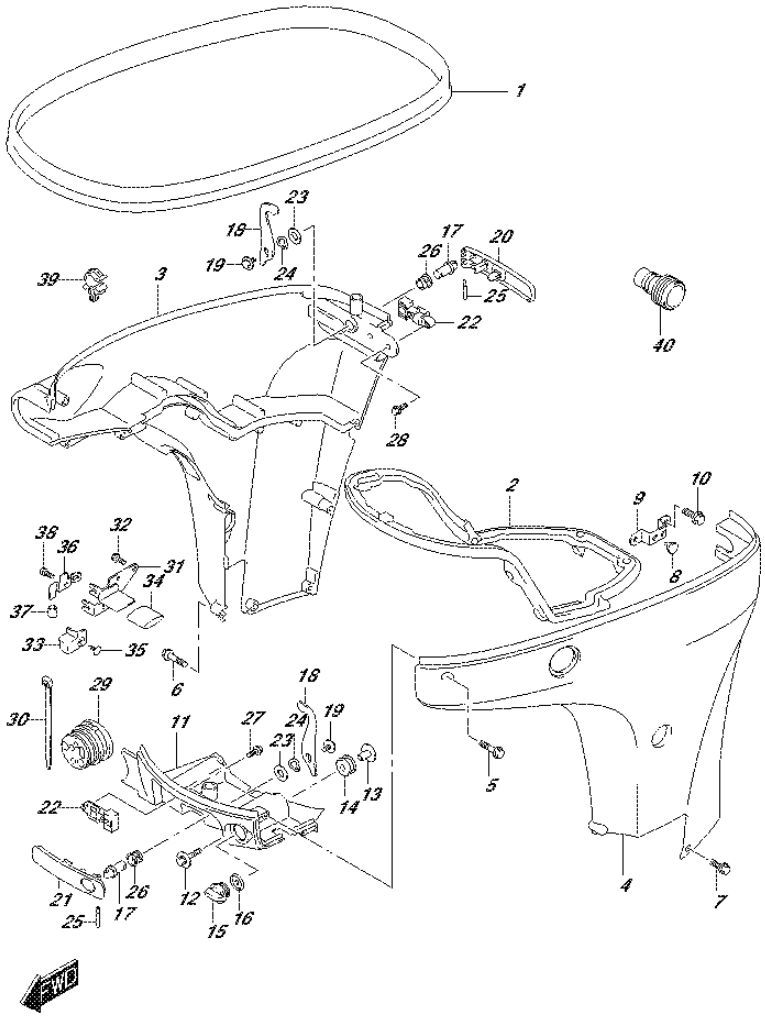

FIG.410K (2-G-11) SIDE COVER (DF90ATH E40)

REF NO.	PART NO.	DESCRIPTION	Q'TY	REMARKS
1	61112-99E01	RUBBER, SIDE COVER	1	
2	61134-87L00	SEAL, SIDE COVER	1	
3	61811-87L20-0EP	COVER, SIDE STBD (BLACK)	1	
4	61821-87L21-0EP	COVER, SIDE PORT (BLACK)	1	
5	09136-06148	SCREW (6X35)	8	
6	09136-06149	SCREW (6X55)	2	
7	09136-06161	SCREW (6X17)	3	
8	09321-08022	CUSHION	2	
9	61827-87L00	HOLDER, SIDE COVER	1	
10	01550-08207	BOLT	2	
11	61831-87L20-0EP	PANEL, FRONT (BLACK)	1	
12	09116-08163	BOLT (8X40)	2	
13	09169-08039	WASHER	2	
14	09320-11013	CUSHION	2	
15	17913-93J00	PLUG, WATER	1	
16	17914-93J00	GASKET, WATER PLUG	1	
17	61632-93J00	SHAFT, ENGINE COVER HOOK	2	
18	61641-87L00	HOOK, ENGINE COVER	2	
19	09116-06127	BOLT (6X12)	2	
20	61633-87L00	LEVER, HOOK REAR	1	
21	61645-87L00	LEVER, HOOK FRONT	1	
22	61673-93J11	LATCH, HOOK LEVER	2	
23	09160-13014	WASHER (13.2X25X1)	2	
24	09164-14008	WASHER	2	
25	09202-04022	PIN	2	
26	09306-13007	BUSH	2	
27	01550-05107	BOLT	2	
28	01550-05167	BOLT	2	
29	61124-87L00	GROMMET, REMOCON CABLE	1	
30	09407-25402	CLAMP (L:250)	1	

FIG.410K

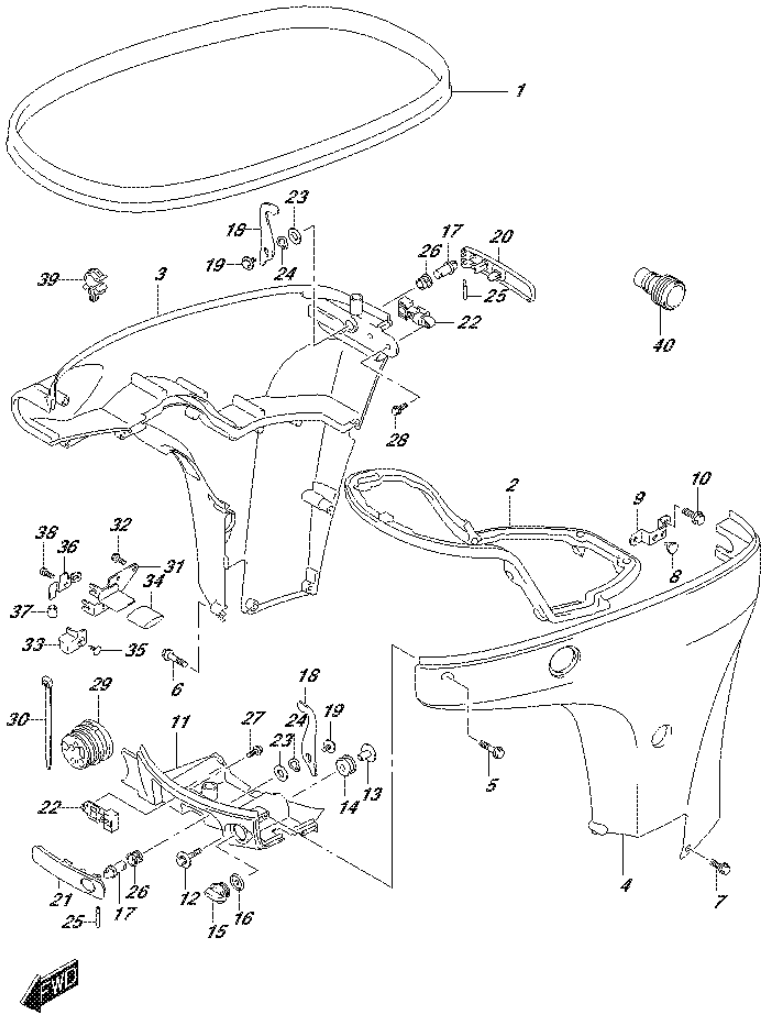

FIG.410K (2-G-12) SIDE COVER (DF90ATH E40)

REF NO.	PART NO.	DESCRIPTION	Q'TY	REMARKS
31	67341-87L00	HOLDER, REMOCON CABLE	1	
32	01550-06167	BOLT	2	
33	67345-87L00	PROTECTOR	1	
34	67346-87L00	PROTECTOR, HOLDER	1	
35	09409-10304-5ES	CLIP (BLACK)	1	
36	67350-87L00	STOPPER, REMOCON CABLE	1	
37	09352-70103-600	.HOSE (7X10.2X600)	2	L:600->14
38	01570-06127	BOLT	1	
39	09403-11320	CLAMP	1	
40	17917-87L00	CONNECTOR, FLUSH WATER	1	

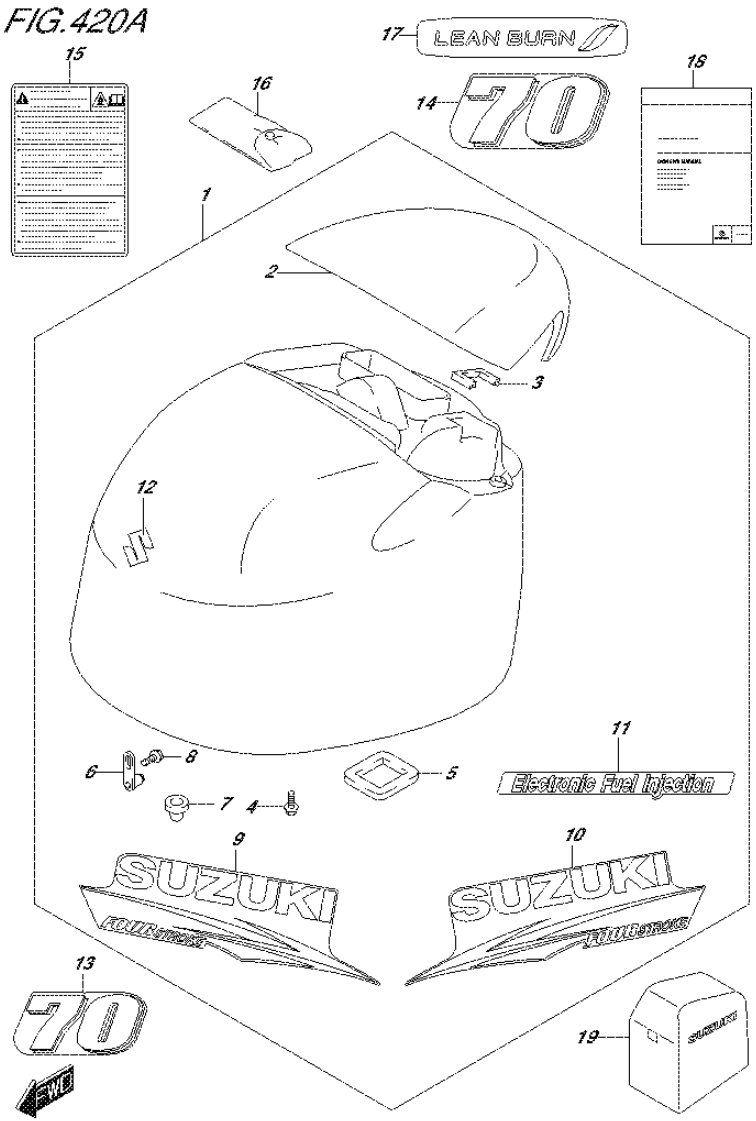

DF90A_E01_015_420A
ENGINE COVER

FIG.420A (2-G-13) ENGINE COVER (DF70A E01)

REF NO.	PART NO.	DESCRIPTION	Q'TY	REMARKS
1-1	61400-87Y80-0EP	COVER SET, ENGINE (BLACK)	1	
1-2	61400-87Y90-Y5S	COVER SET, ENGINE (WHITE)	1	
2-1	61431-87L21-0EP	.HANDLE, TILT UP (BLACK)	1	
2-2	61431-87L21-Y5S	.HANDLE, TILT UP (WHITE)	1	
3	61439-87L00	.SEAL, TILT UP HANDLE	1	
4	01550-06167	.BOLT	4	
5	61476-87L00	.SEAL, AIR VENT	1	
6	61610-93J00	.FASTENER	2	
7	09329-10022	.CUSHION	2	
8	01550-06127	.BOLT	2	
9-1	61443-87L20	.STRIPE, ENGINE COVER STBD	1	FOR 0EP
9-2	61443-87L30	.STRIPE, ENGINE COVER STBD	1	FOR Y5S
10-1	61453-87L20	.STRIPE, ENGINE COVER PORT	1	FOR 0EP
10-2	61453-87L30	.STRIPE, ENGINE COVER PORT	1	FOR Y5S
11-1	61446-87L12	.DECAL, EFI	1	FOR 0EP
11-2	61446-87L20	.DECAL, EFI	1	FOR Y5S
12	68111-18G20	.EMBLEM (S)	1	
13-1	61422-87L80	MARK, EMBLEM FRONT (70)	1	FOR 0EP
13-2	61435-87L90	MARK, EMBLEM FRONT (70)	1	FOR Y5S
14-1	61435-87L80	MARK, EMBLEM REAR (70)	1	FOR 0EP
14-2	61435-87L90	MARK, EMBLEM REAR (70)	1	FOR Y5S
15	61458-99E70	LABEL, ENGINE COVER	1	
16	09800-81840	TOOL SET	1	
17	61471-98J00	DECAL, LEANBURN	1	
18-1	99011-87L30-054	MANUAL, OWNER'S	1	
18-2	99011-87L30-059	MANUAL, OWNER'S	1	
19	68110-87L00	COVER, WEATHER	1	OPT

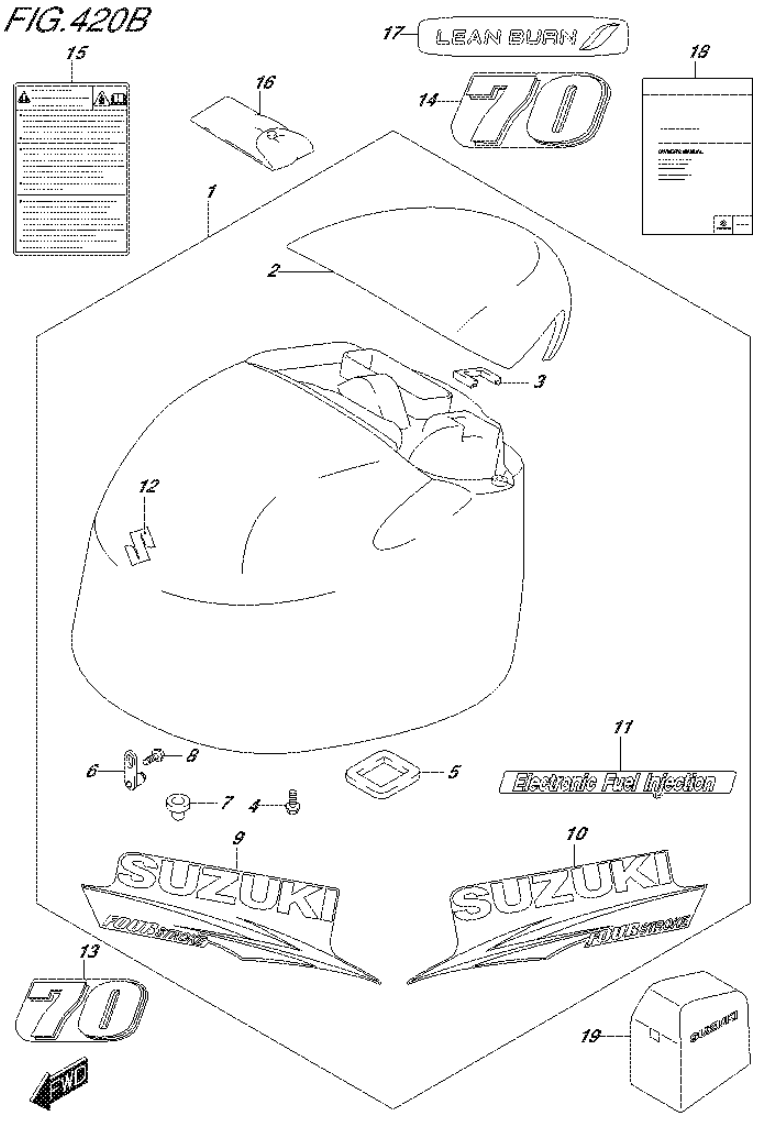

FIG.420B (2-G-14) ENGINE COVER (DF70A E40)

REF NO.	PART NO.	DESCRIPTION	Q'TY	REMARKS
1-1	61400-87Y80-0EP	COVER SET, ENGINE (BLACK)	1	
1-2	61400-87Y90-Y5S	COVER SET, ENGINE (WHITE)	1	
2-1	61431-87L21-0EP	.HANDLE, TILT UP (BLACK)	1	
2-2	61431-87L21-Y5S	.HANDLE, TILT UP (WHITE)	1	
3	61439-87L00	.SEAL, TILT UP HANDLE	1	
4	01550-06167	.BOLT	4	
5	61476-87L00	.SEAL, AIR VENT	1	
6	61610-93J00	.FASTENER	2	
7	09329-10022	.CUSHION	2	
8	01550-06127	.BOLT	2	
9-1	61443-87L20	.STRIPE, ENGINE COVER STBD	1	FOR 0EP
9-2	61443-87L30	.STRIPE, ENGINE COVER STBD	1	FOR Y5S
10-1	61453-87L20	.STRIPE, ENGINE COVER PORT	1	FOR 0EP
10-2	61453-87L30	.STRIPE, ENGINE COVER PORT	1	FOR Y5S
11-1	61446-87L12	.DECAL, EFI	1	FOR 0EP
11-2	61446-87L20	.DECAL, EFI	1	FOR Y5S
12	68111-18G20	.EMBLEM (S)	1	
13-1	61422-87L80	MARK, EMBLEM FRONT (70)	1	FOR 0EP
13-2	61435-87L90	MARK, EMBLEM FRONT (70)	1	FOR Y5S
14-1	61435-87L80	MARK, EMBLEM REAR (70)	1	FOR 0EP
14-2	61435-87L90	MARK, EMBLEM REAR (70)	1	FOR Y5S
15	61458-99E70	LABEL, ENGINE COVER	1	
16	09800-81840	TOOL SET	1	
17	61471-98J00	DECAL, LEANBURN	1	
18	99011-87L30-059	MANUAL, OWNER'S	1	
19	68110-87L00	COVER, WEATHER	1	OPT

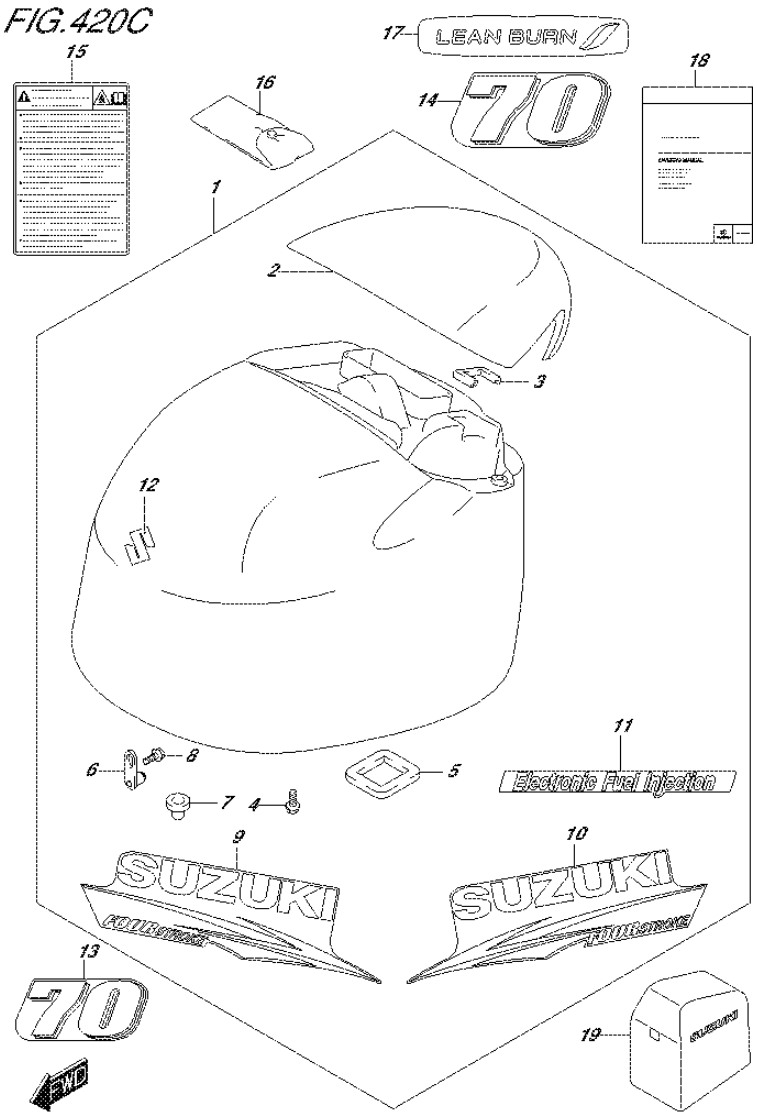

FIG.420C (2-G-15) ENGINE COVER (DF70ATH E01)

REF NO.	PART NO.	DESCRIPTION	Q'TY	REMARKS
1	61400-87Y80-0EP	COVER SET, ENGINE (BLACK)	1	
2	61431-87L21-0EP	.HANDLE, TILT UP (BLACK)	1	
3	61439-87L00	.SEAL, TILT UP HANDLE	1	
4	01550-06167	.BOLT	4	
5	61476-87L00	.SEAL, AIR VENT	1	
6	61610-93J00	.FASTENER	2	
7	09329-10022	.CUSHION	2	
8	01550-06127	.BOLT	2	
9	61443-87L20	.STRIPE, ENGINE COVER STBD	1	
10	61453-87L20	.STRIPE, ENGINE COVER PORT	1	
11	61446-87L12	.DECAL, EFI	1	
12	68111-18G20	.EMBLEM (S)	1	
13	61422-87L80	MARK, EMBLEM FRONT (70)	1	
14	61435-87L80	MARK, EMBLEM REAR (70)	1	
15	61458-99E70	LABEL, ENGINE COVER	1	
16	09800-81840	TOOL SET	1	
17	61471-98J00	DECAL, LEANBURN	1	
18	99011-87L30-059	MANUAL, OWNER'S	1	
19	68110-87L00	COVER, WEATHER	1	OPT

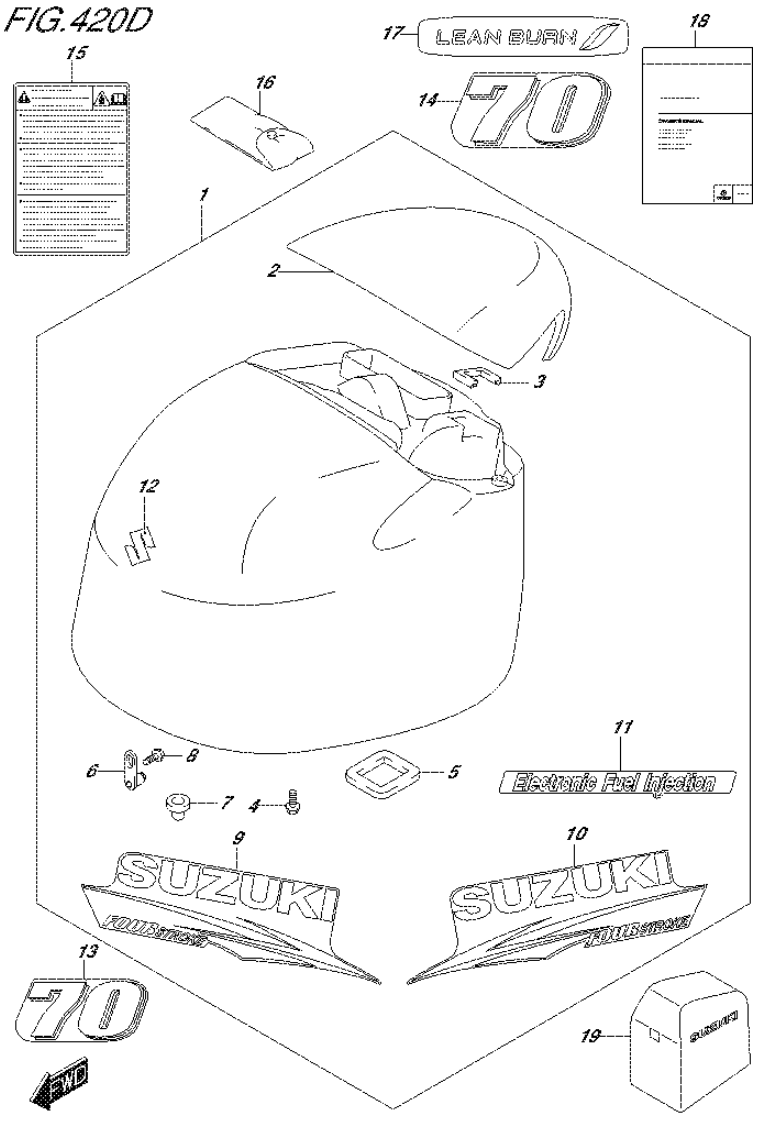

FIG.420D (2-H-2) ENGINE COVER (DF70ATH E40)

REF NO.	PART NO.	DESCRIPTION	Q'TY	REMARKS
1	61400-87Y80-0EP	COVER SET, ENGINE (BLACK)	1	
2	61431-87L21-0EP	.HANDLE, TILT UP (BLACK)	1	
3	61439-87L00	.SEAL, TILT UP HANDLE	1	
4	01550-06167	.BOLT	4	
5	61476-87L00	.SEAL, AIR VENT	1	
6	61610-93J00	.FASTENER	2	
7	09329-10022	.CUSHION	2	
8	01550-06127	.BOLT	2	
9	61443-87L20	.STRIPE, ENGINE COVER STBD	1	
10	61453-87L20	.STRIPE, ENGINE COVER PORT	1	
11	61446-87L12	.DECAL, EFI	1	
12	68111-18G20	.EMBLEM (S)	1	
13	61422-87L80	MARK, EMBLEM FRONT (70)	1	
14	61435-87L80	MARK, EMBLEM REAR (70)	1	
15	61458-99E70	LABEL, ENGINE COVER	1	
16	09800-81840	TOOL SET	1	
17	61471-98J00	DECAL, LEANBURN	1	
18	99011-87L30-059	MANUAL, OWNER'S	1	
19	68110-87L00	COVER, WEATHER	1	OPT

DF90A_E01_015_420D
ENGINE COVER

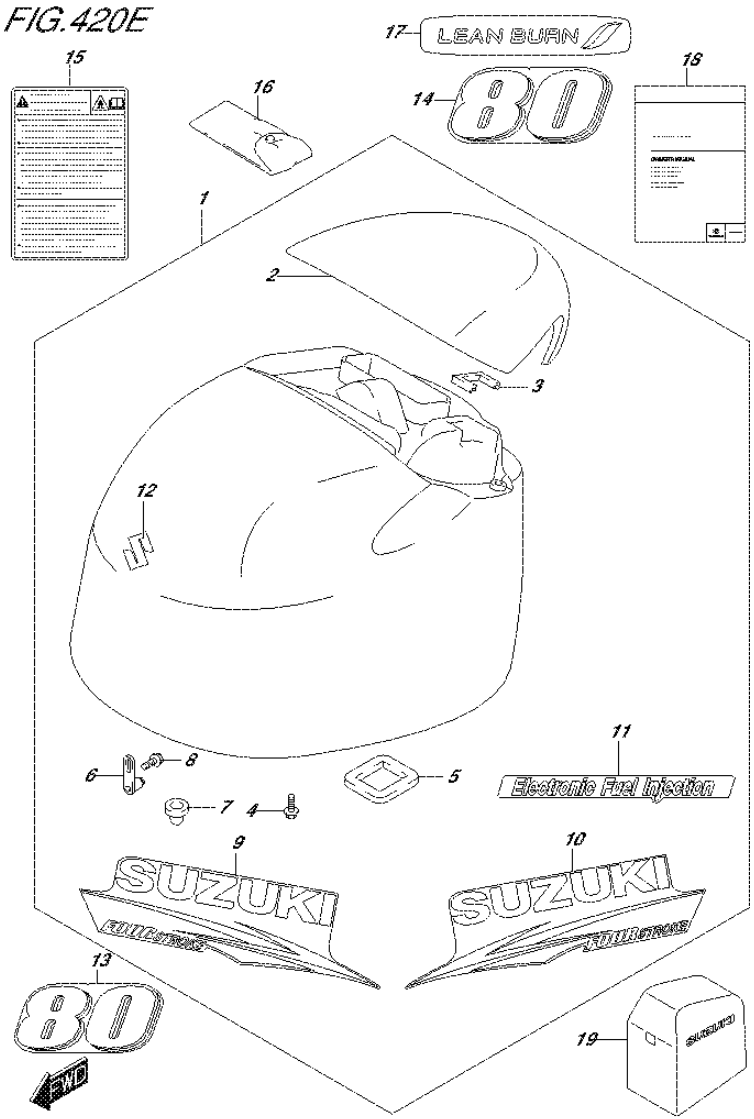

DF90A_E01_015_420E
ENGINE COVER

FIG.420E (2-H-3) ENGINE COVER (DF80A E01)

REF NO.	PART NO.	DESCRIPTION	Q'TY	REMARKS
1	61400-87Y80-0EP	COVER SET, ENGINE (BLACK)	1	
2	61431-87L21-0EP	.HANDLE, TILT UP (BLACK)	1	
3	61439-87L00	.SEAL, TILT UP HANDLE	1	
4	01550-06167	.BOLT	4	
5	61476-87L00	.SEAL, AIR VENT	1	
6	61610-93J00	.FASTENER	2	
7	09329-10022	.CUSHION	2	
8	01550-06127	.BOLT	2	
9	61443-87L20	.STRIPE, ENGINE COVER STBD	1	
10	61453-87L20	.STRIPE, ENGINE COVER PORT	1	
11	61446-87L12	.DECAL, EFI	1	
12	68111-18G20	.EMBLEM (S)	1	
13	61422-87L60	MARK, EMBLEM FRONT (80)	1	
14	61435-87L60	MARK, EMBLEM REAR (80)	1	
15	61458-99E70	LABEL, ENGINE COVER	1	
16	09800-81840	TOOL SET	1	
17	61471-98J00	DECAL, LEANBURN	1	
18-1	99011-87L30-054	MANUAL, OWNER'S	1	
18-2	99011-87L30-059	MANUAL, OWNER'S	1	
19	68110-87L00	COVER, WEATHER	1	OPT

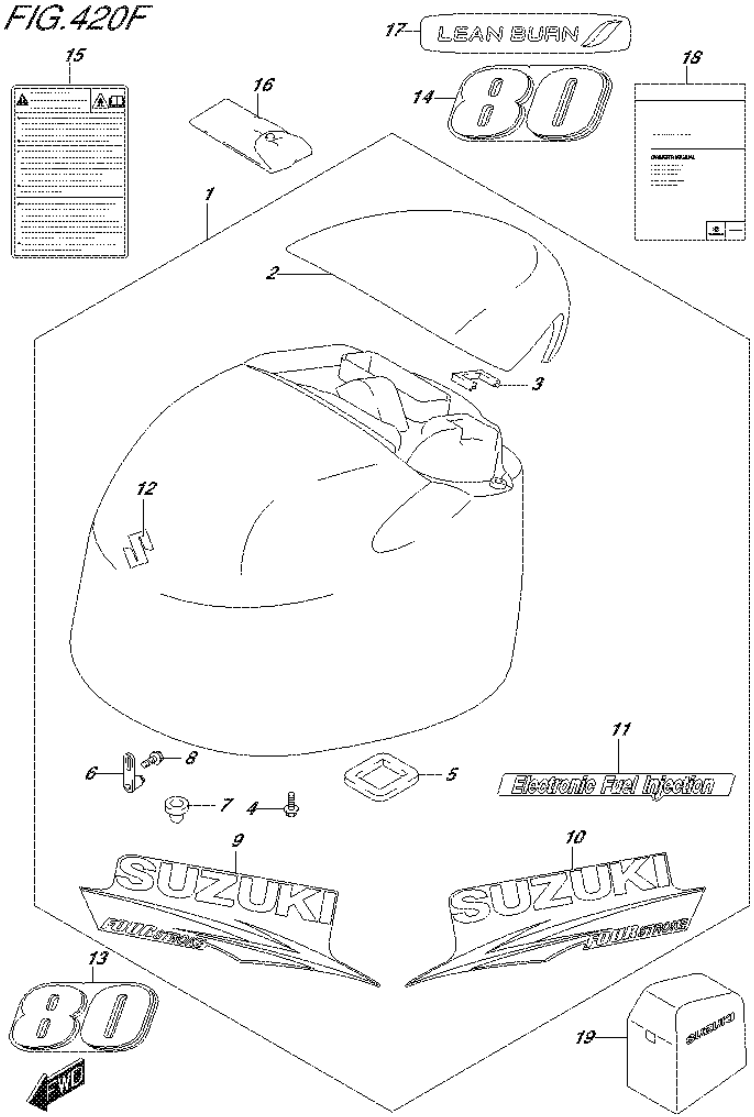

DF90A_E01_015_420F
ENGINE COVER

FIG.420F (2-H-4) ENGINE COVER (DF80A E40)

REF NO.	PART NO.	DESCRIPTION	Q'TY	REMARKS
1	61400-87Y80-0EP	COVER SET, ENGINE (BLACK)	1	
2	61431-87L21-0EP	.HANDLE, TILT UP (BLACK)	1	
3	61439-87L00	.SEAL, TILT UP HANDLE	1	
4	01550-06167	.BOLT	4	
5	61476-87L00	.SEAL, AIR VENT	1	
6	61610-93J00	.FASTENER	2	
7	09329-10022	.CUSHION	2	
8	01550-06127	.BOLT	2	
9	61443-87L20	.STRIPE, ENGINE COVER STBD	1	
10	61453-87L20	.STRIPE, ENGINE COVER PORT	1	
11	61446-87L12	.DECAL, EFI	1	
12	68111-18G20	.EMBLEM (S)	1	
13	61422-87L60	MARK, EMBLEM FRONT (80)	1	
14	61435-87L60	MARK, EMBLEM REAR (80)	1	
15	61458-99E70	LABEL, ENGINE COVER	1	
16	09800-81840	TOOL SET	1	
17	61471-98J00	DECAL, LEANBURN	1	
18	99011-87L30-059	MANUAL, OWNER'S	1	
19	68110-87L00	COVER, WEATHER	1	OPT

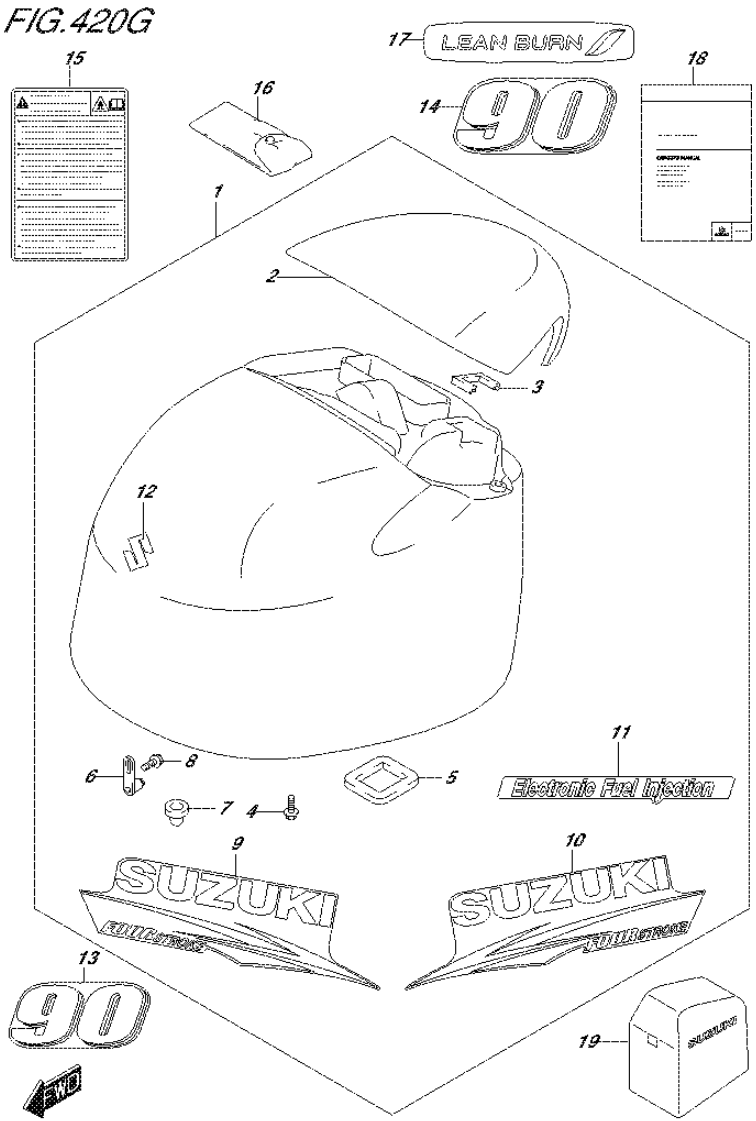

DF90A_E01_015_420G
ENGINE COVER

FIG.420G (2-H-5) ENGINE COVER (DF90A E01)

REF NO.	PART NO.	DESCRIPTION	Q'TY	REMARKS
1-1	61400-87Y80-0EP	COVER SET, ENGINE (BLACK)	1	
1-2	61400-87Y90-Y5S	COVER SET, ENGINE (WHITE)	1	
2-1	61431-87L21-0EP	.HANDLE, TILT UP (BLACK)	1	
2-2	61431-87L21-Y5S	.HANDLE, TILT UP (WHITE)	1	
3	61439-87L00	.SEAL, TILT UP HANDLE	1	
4	01550-06167	.BOLT	4	
5	61476-87L00	.SEAL, AIR VENT	1	
6	61610-93J00	.FASTENER	2	
7	09329-10022	.CUSHION	2	
8	01550-06127	.BOLT	2	
9-1	61443-87L20	.STRIPE, ENGINE COVER STBD	1	FOR 0EP
9-2	61443-87L30	.STRIPE, ENGINE COVER STBD	1	FOR Y5S
10-1	61453-87L20	.STRIPE, ENGINE COVER PORT	1	FOR 0EP
10-2	61453-87L30	.STRIPE, ENGINE COVER PORT	1	FOR Y5S
11-1	61446-87L12	.DECAL, EFI	1	FOR 0EP
11-2	61446-87L20	.DECAL, EFI	1	FOR Y5S
12	68111-18G20	.EMBLEM (S)	1	
13-1	61422-87L70	MARK, EMBLEM FRONT (90)	1	FOR 0EP
13-2	61435-87LA0	MARK, EMBLEM FRONT (90)	1	FOR Y5S
14-1	61435-87L70	MARK, EMBLEM REAR (90)	1	FOR 0EP
14-2	61435-87LA0	MARK, EMBLEM REAR (90)	1	FOR Y5S
15	61458-99E70	LABEL, ENGINE COVER	1	
16	09800-81840	TOOL SET	1	
17	61471-98J00	DECAL, LEANBURN	1	
18-1	99011-87L30-054	MANUAL, OWNER'S	1	
18-2	99011-87L30-059	MANUAL, OWNER'S	1	
19	68110-87L00	COVER, WEATHER	1	OPT

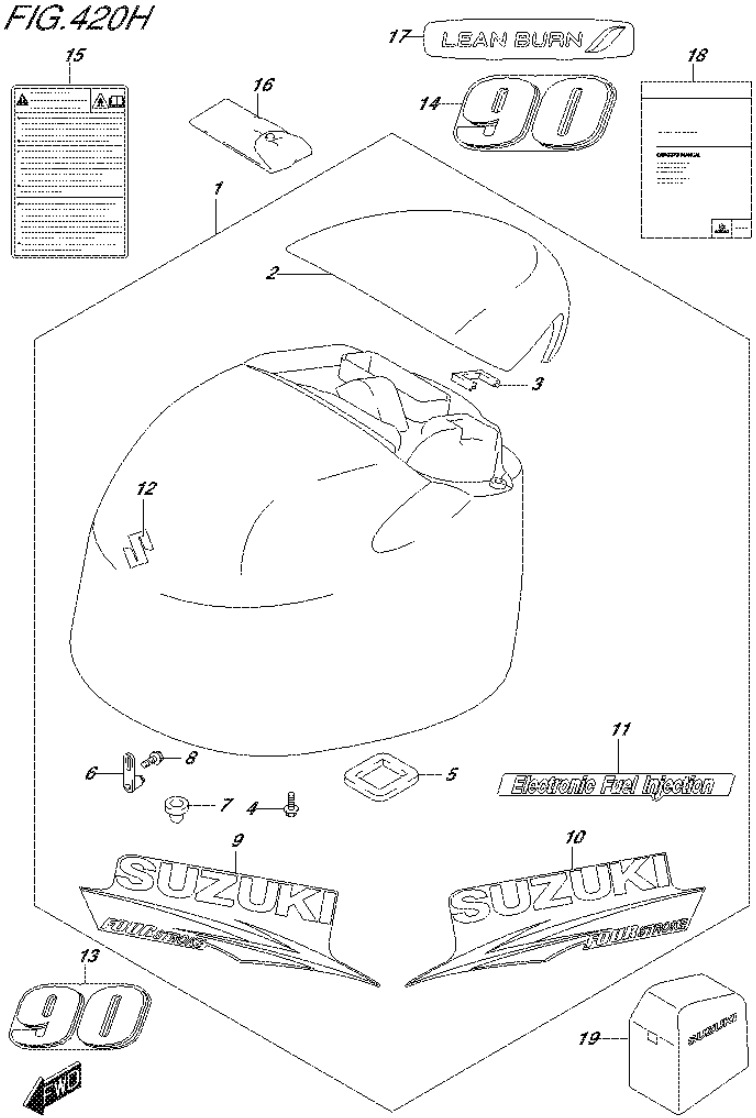

DF90A_E01_015_420H
ENGINE COVER

FIG.420H (2-H-6) ENGINE COVER (DF90A E40)

REF NO.	PART NO.	DESCRIPTION	Q'TY	REMARKS
1-1	61400-87Y80-0EP	COVER SET, ENGINE (BLACK)	1	
1-2	61400-87Y90-Y5S	COVER SET, ENGINE (WHITE)	1	
2-1	61431-87L21-0EP	.HANDLE, TILT UP (BLACK)	1	
2-2	61431-87L21-Y5S	.HANDLE, TILT UP (WHITE)	1	
3	61439-87L00	.SEAL, TILT UP HANDLE	1	
4	01550-06167	.BOLT	4	
5	61476-87L00	.SEAL, AIR VENT	1	
6	61610-93J00	.FASTENER	2	
7	09329-10022	.CUSHION	2	
8	01550-06127	.BOLT	2	
9-1	61443-87L20	.STRIPE, ENGINE COVER STBD	1	FOR 0EP
9-2	61443-87L30	.STRIPE, ENGINE COVER STBD	1	FOR Y5S
10-1	61453-87L20	.STRIPE, ENGINE COVER PORT	1	FOR 0EP
10-2	61453-87L30	.STRIPE, ENGINE COVER PORT	1	FOR Y5S
11-1	61446-87L12	.DECAL, EFI	1	FOR 0EP
11-2	61446-87L20	.DECAL, EFI	1	FOR Y5S
12	68111-18G20	.EMBLEM (S)	1	
13-1	61422-87L70	MARK, EMBLEM FRONT (90)	1	FOR 0EP
13-2	61435-87LA0	MARK, EMBLEM FRONT (90)	1	FOR Y5S
14-1	61435-87L70	MARK, EMBLEM REAR (90)	1	FOR 0EP
14-2	61435-87LA0	MARK, EMBLEM REAR (90)	1	FOR Y5S
15	61458-99E70	LABEL, ENGINE COVER	1	
16	09800-81840	TOOL SET	1	
17	61471-98J00	DECAL, LEANBURN	1	
18	99011-87L30-059	MANUAL, OWNER'S	1	
19	68110-87L00	COVER, WEATHER	1	OPT

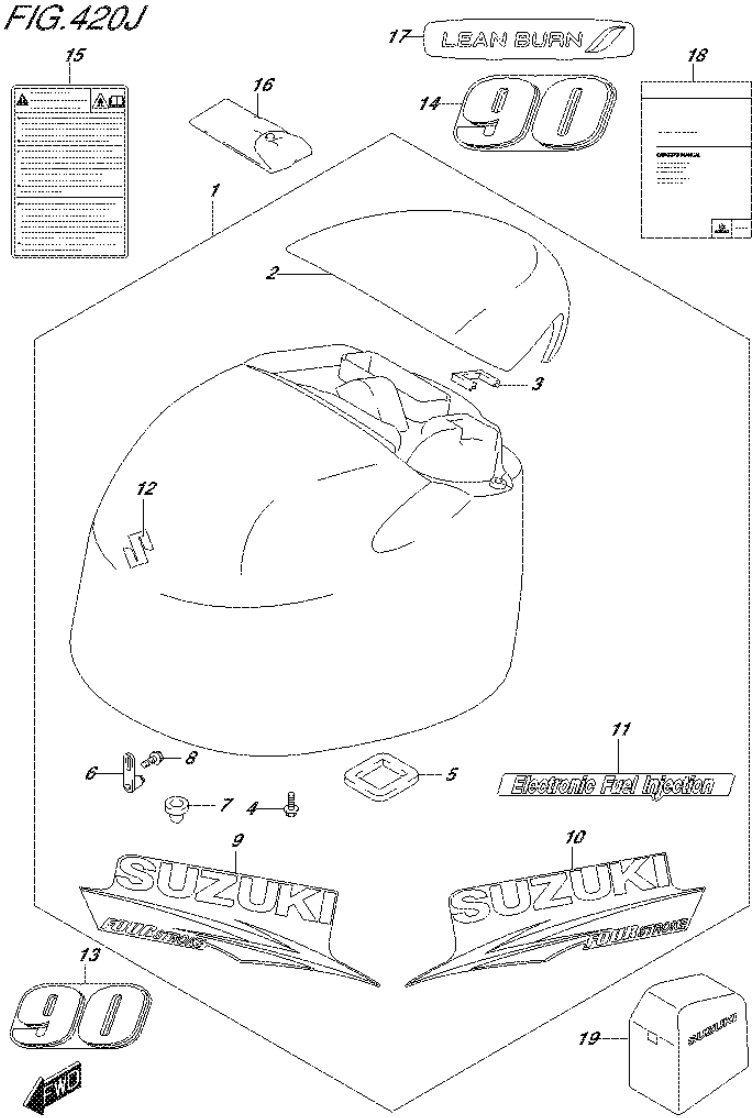

FIG.420J (2-H-7) ENGINE COVER (DF90ATH E01)

REF NO.	PART NO.	DESCRIPTION	Q'TY	REMARKS
1	61400-87Y80-0EP	COVER SET, ENGINE (BLACK)	1	
2	61431-87L21-0EP	.HANDLE, TILT UP (BLACK)	1	
3	61439-87L00	.SEAL, TILT UP HANDLE	1	
4	01550-06167	.BOLT	4	
5	61476-87L00	.SEAL, AIR VENT	1	
6	61610-93J00	.FASTENER	2	
7	09329-10022	.CUSHION	2	
8	01550-06127	.BOLT	2	
9	61443-87L20	.STRIPE, ENGINE COVER STBD	1	
10	61453-87L20	.STRIPE, ENGINE COVER PORT	1	
11	61446-87L12	.DECAL, EFI	1	
12	68111-18G20	.EMBLEM (S)	1	
13	61422-87L70	MARK, EMBLEM FRONT (90)	1	
14	61435-87L70	MARK, EMBLEM REAR (90)	1	
15	61458-99E70	LABEL, ENGINE COVER	1	
16	09800-81840	TOOL SET	1	
17	61471-98J00	DECAL, LEANBURN	1	
18	99011-87L30-059	MANUAL, OWNER'S	1	
19	68110-87L00	COVER, WEATHER	1	OPT

DF90A_E01_015_420J
ENGINE COVER

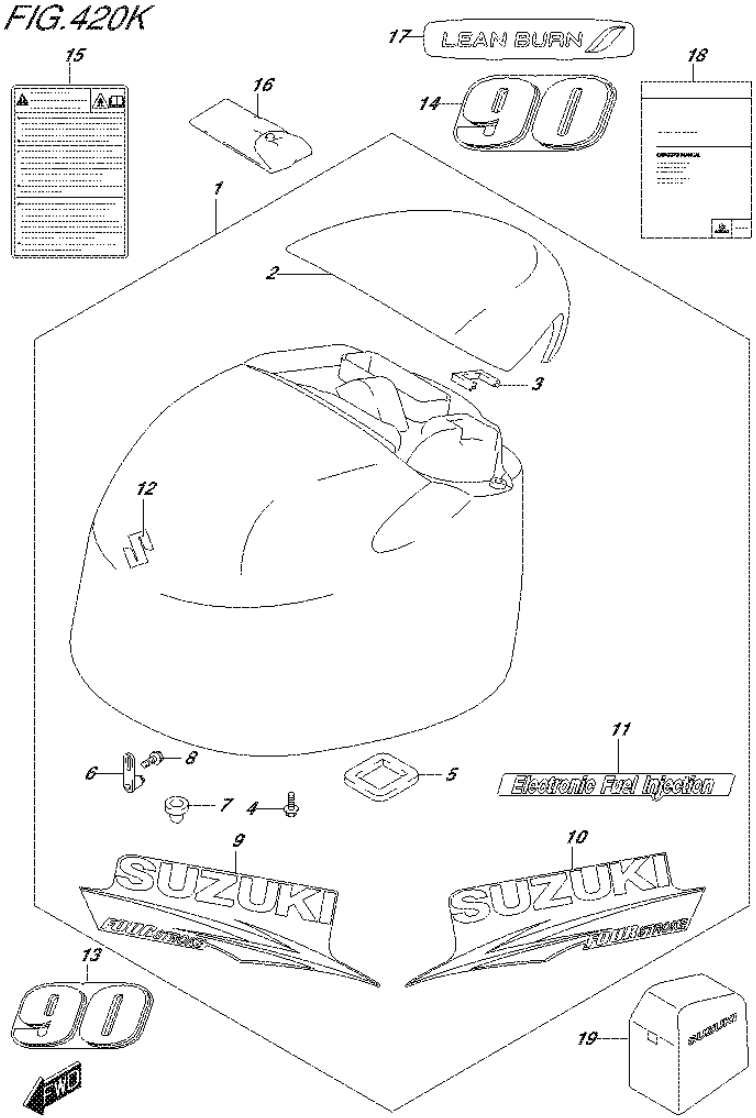

FIG.420K (2-H-8) ENGINE COVER (DF90ATH E40)

REF NO.	PART NO.	DESCRIPTION	Q'TY	REMARKS
1	61400-87Y80-0EP	COVER SET, ENGINE (BLACK)	1	
2	61431-87L21-0EP	.HANDLE, TILT UP (BLACK)	1	
3	61439-87L00	.SEAL, TILT UP HANDLE	1	
4	01550-06167	.BOLT	4	
5	61476-87L00	.SEAL, AIR VENT	1	
6	61610-93J00	.FASTENER	2	
7	09329-10022	.CUSHION	2	
8	01550-06127	.BOLT	2	
9	61443-87L20	.STRIPE, ENGINE COVER STBD	1	
10	61453-87L20	.STRIPE, ENGINE COVER PORT	1	
11	61446-87L12	.DECAL, EFI	1	
12	68111-18G20	.EMBLEM (S)	1	
13	61422-87L70	MARK, EMBLEM FRONT (90)	1	
14	61435-87L70	MARK, EMBLEM REAR (90)	1	
15	61458-99E70	LABEL, ENGINE COVER	1	
16	09800-81840	TOOL SET	1	
17	61471-98J00	DECAL, LEANBURN	1	
18	99011-87L30-059	MANUAL, OWNER'S	1	
19	68110-87L00	COVER, WEATHER	1	OPT

FIG.432A

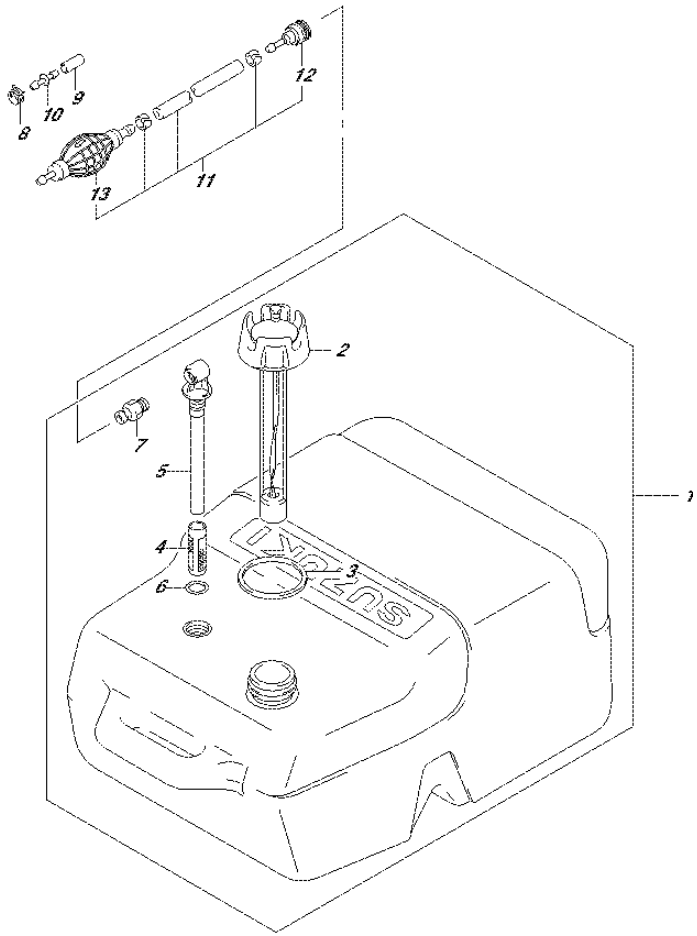

FIG.432A (2-H-9) FUEL TANK

REF NO.	PART NO.	DESCRIPTION	Q'TY	REMARKS
1	65000-95D01	TANK ASSY, FUEL (25L)	1	
2	65520-95D01	.CAP ASSY, FUEL TANK	1	
3	65561-95D00	.GASKET, TANK CAP	1	
4	65831-95D00	.FILTER, OUTLET	1	
5	65890-95D00	.OUTLET ASSY	1	
6	65892-95D00	.O RING, FUEL OUTLET	1	
7	65740-95D01	.PLUG, FUEL CONNECTOR	1	
8	09401-11423	CLIP	1	
9	09251-07003	CAP (OD:11.5)	1	
10	09367-08001	JOINT	1	
11	65700-90J14	HOSE, FUEL (TANK TO ENGINE)	1	
12	65750-95500	.SOCKET, FUEL HOSE	1	
13	65770-90J11	.PUMP, SQUEEZE	1	

FIG.442A

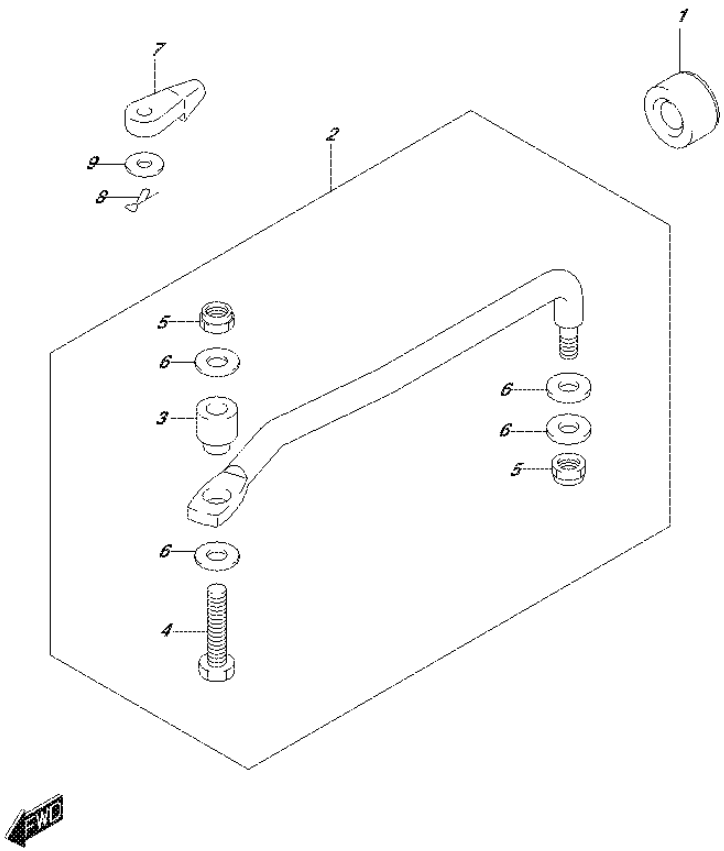

FIG.442A (2-H-10) DRAG LINK (DF70A E01)

REF NO.	PART NO.	DESCRIPTION	Q'TY	REMARKS
1	41161-94400	SEAL, STEERING CABLE	1	
2	67701-87L01	LINK, DRAG	1	
3	67721-87L00	.SPACER	1	
4	67725-99E10	.BOLT, DRAG LINK	1	
5	67726-99E00	.NUT	2	
6	67728-99E00	.WASHER	4	
7	67467-89J01	CONNECTOR, REMOCON CABLE	2	
8	09385-06012	CLIP	2	
9	09160-06055	WASHER (7X12X1)	2	

FIG.442B

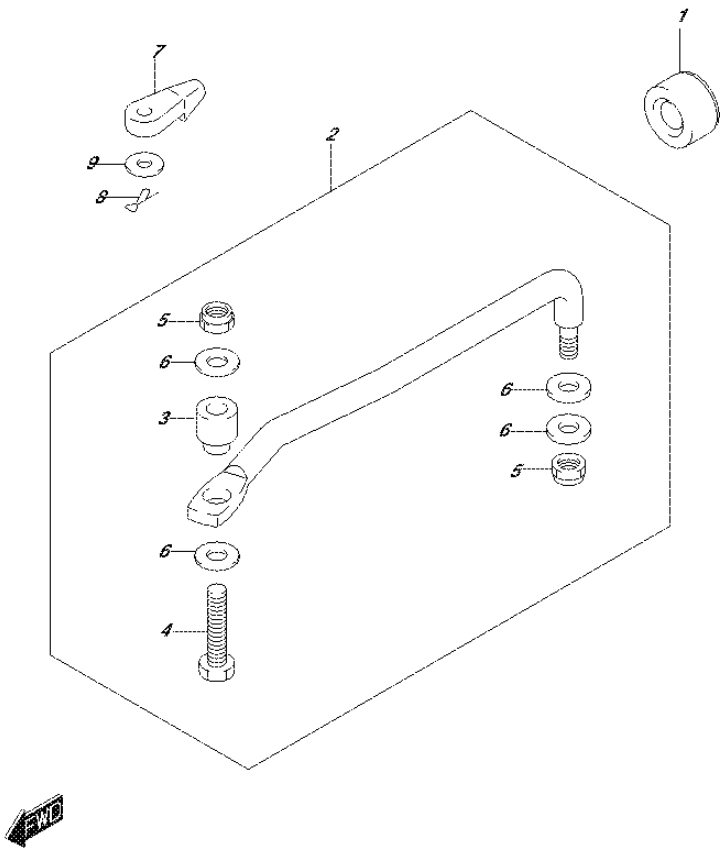

FIG.442B (2-H-11) DRAG LINK (DF70A E40)

REF NO.	PART NO.	DESCRIPTION	Q'TY	REMARKS
1	41161-94400	SEAL, STEERING CABLE	1	
2	67701-87L01	LINK, DRAG	1	
3	67721-87L00	.SPACER	1	
4	67725-99E10	.BOLT, DRAG LINK	1	
5	67726-99E00	.NUT	2	
6	67728-99E00	.WASHER	4	
7	67467-89J01	CONNECTOR, REMOCON CABLE	2	
8	09385-06012	CLIP	2	
9	09160-06055	WASHER (7X12X1)	2	

FIG.442C

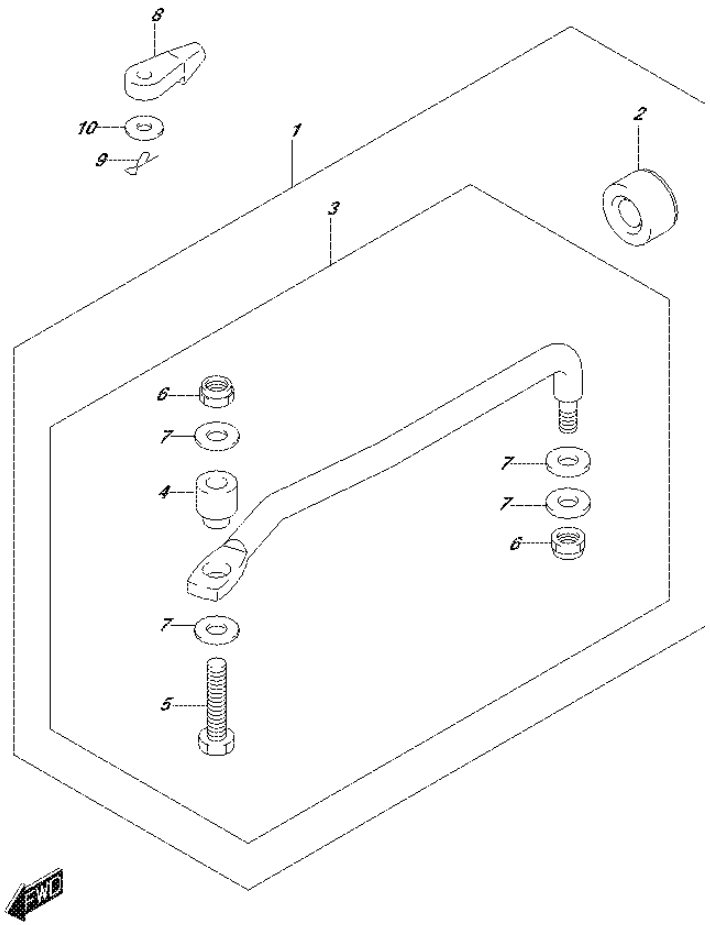

FIG.442C (2-H-12) DRAG LINK (DF70ATH E01)

REF NO.	PART NO.	DESCRIPTION	Q'TY	REMARKS
1	67700-87L01	LINK SET, DRAG	1	OPT
2	41161-94400	.SEAL, STEERING CABLE	1	OPT
3	67701-87L01	.LINK, DRAG	1	OPT
4	67721-87L00	..SPACER	1	OPT
5	67725-99E10	..BOLT, DRAG LINK	1	OPT
6	67726-99E00	..NUT	2	OPT
7	67728-99E00	..WASHER	4	OPT
8	67467-89J01	CONNECTOR, REMOCON CABLE	2	
9	09385-06012	CLIP	2	
10	09160-06055	WASHER (7X12X1)	2	

FIG.442D

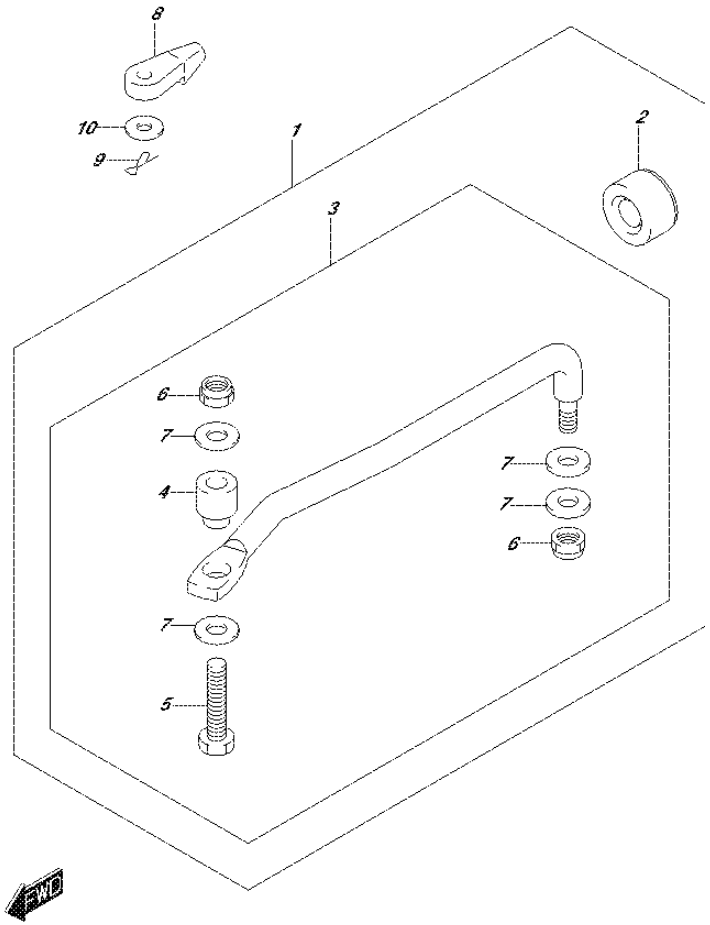

FIG.442D (2-H-13) DRAG LINK (DF70ATH E40)

REF NO.	PART NO.	DESCRIPTION	Q'TY	REMARKS
1	67700-87L01	LINK SET, DRAG	1	OPT
2	41161-94400	.SEAL, STEERING CABLE	1	OPT
3	67701-87L01	.LINK, DRAG	1	OPT
4	67721-87L00	..SPACER	1	OPT
5	67725-99E10	..BOLT, DRAG LINK	1	OPT
6	67726-99E00	..NUT	2	OPT
7	67728-99E00	..WASHER	4	OPT
8	67467-89J01	CONNECTOR, REMOCON CABLE	2	
9	09385-06012	CLIP	2	
10	09160-06055	WASHER (7X12X1)	2	

FIG.442E

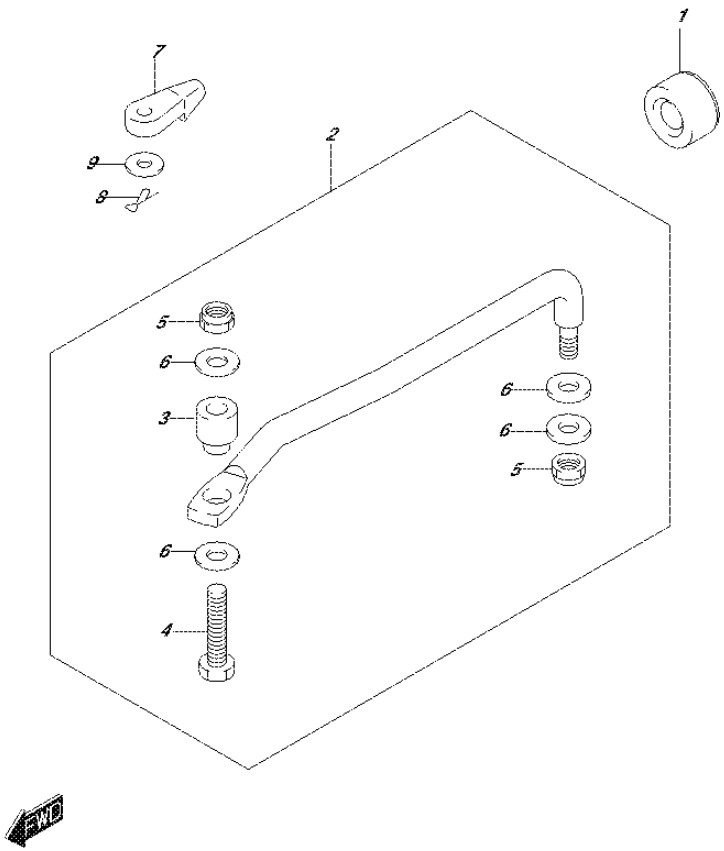

FIG.442E (2-H-14) DRAG LINK (DF80A E01)

REF NO.	PART NO.	DESCRIPTION	Q'TY	REMARKS
1	41161-94400	SEAL, STEERING CABLE	1	
2	67701-87L01	LINK, DRAG	1	
3	67721-87L00	.SPACER	1	
4	67725-99E10	.BOLT, DRAG LINK	1	
5	67726-99E00	.NUT	2	
6	67728-99E00	.WASHER	4	
7	67467-89J01	CONNECTOR, REMOCON CABLE	2	
8	09385-06012	CLIP	2	
9	09160-06055	WASHER (7X12X1)	2	

FIG.442F

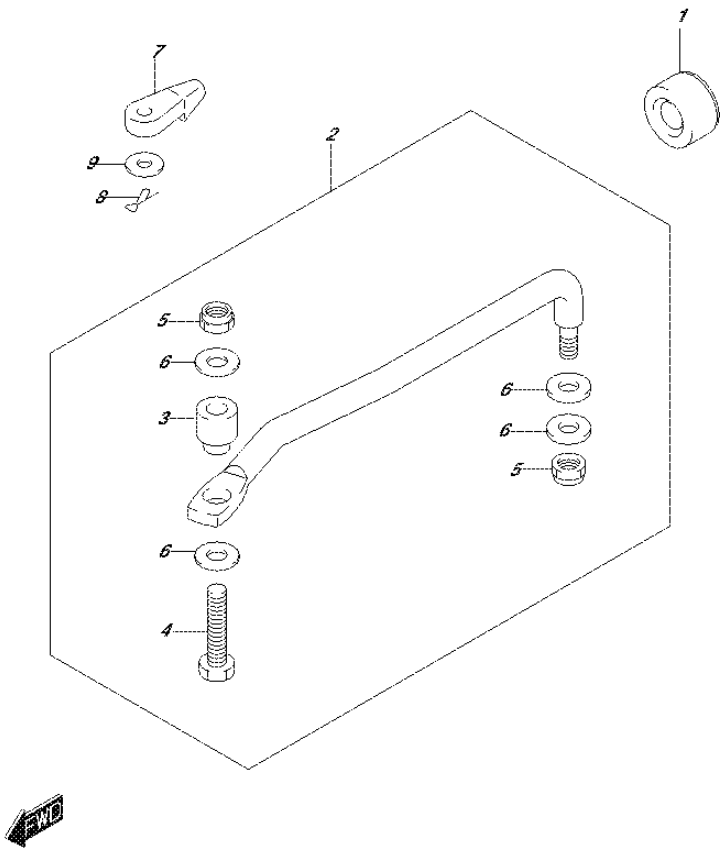

FIG.442F (2-H-15) DRAG LINK (DF80A E40)

REF NO.	PART NO.	DESCRIPTION	Q'TY	REMARKS
1	41161-94400	SEAL, STEERING CABLE	1	
2	67701-87L01	LINK, DRAG	1	
3	67721-87L00	.SPACER	1	
4	67725-99E10	.BOLT, DRAG LINK	1	
5	67726-99E00	.NUT	2	
6	67728-99E00	.WASHER	4	
7	67467-89J01	CONNECTOR, REMOCON CABLE	2	
8	09385-06012	CLIP	2	
9	09160-06055	WASHER (7X12X1)	2	

FIG.442G

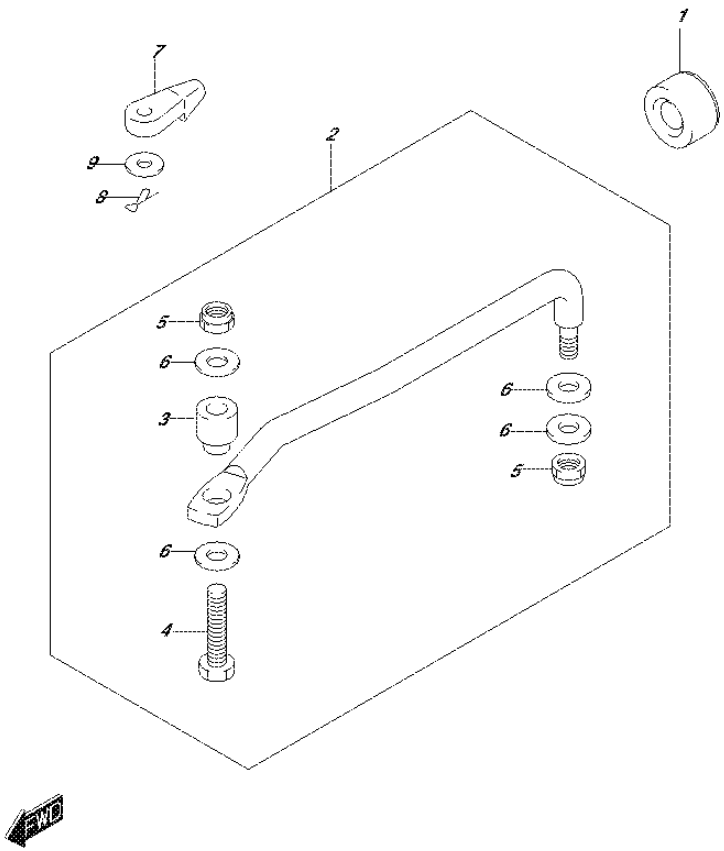

FIG.442G (2-I-2) DRAG LINK (DF90A E01)

REF NO.	PART NO.	DESCRIPTION	Q'TY	REMARKS
1	41161-94400	SEAL, STEERING CABLE	1	
2	67701-87L01	LINK, DRAG	1	
3	67721-87L00	.SPACER	1	
4	67725-99E10	.BOLT, DRAG LINK	1	
5	67726-99E00	.NUT	2	
6	67728-99E00	.WASHER	4	
7	67467-89J01	CONNECTOR, REMOCON CABLE	2	
8	09385-06012	CLIP	2	
9	09160-06055	WASHER (7X12X1)	2	

FIG.442H

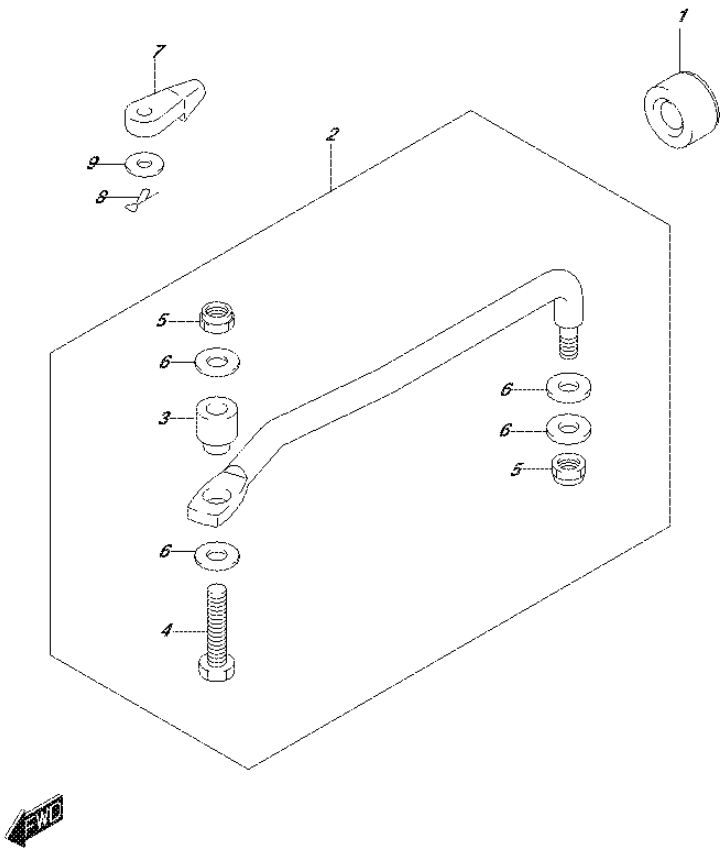

FIG.442H (2-I-3) DRAG LINK (DF90A E40)

REF NO.	PART NO.	DESCRIPTION	Q'TY	REMARKS
1	41161-94400	SEAL, STEERING CABLE	1	
2	67701-87L01	LINK, DRAG	1	
3	67721-87L00	.SPACER	1	
4	67725-99E10	.BOLT, DRAG LINK	1	
5	67726-99E00	.NUT	2	
6	67728-99E00	.WASHER	4	
7	67467-89J01	CONNECTOR, REMOCON CABLE	2	
8	09385-06012	CLIP	2	
9	09160-06055	WASHER (7X12X1)	2	

FIG.442J

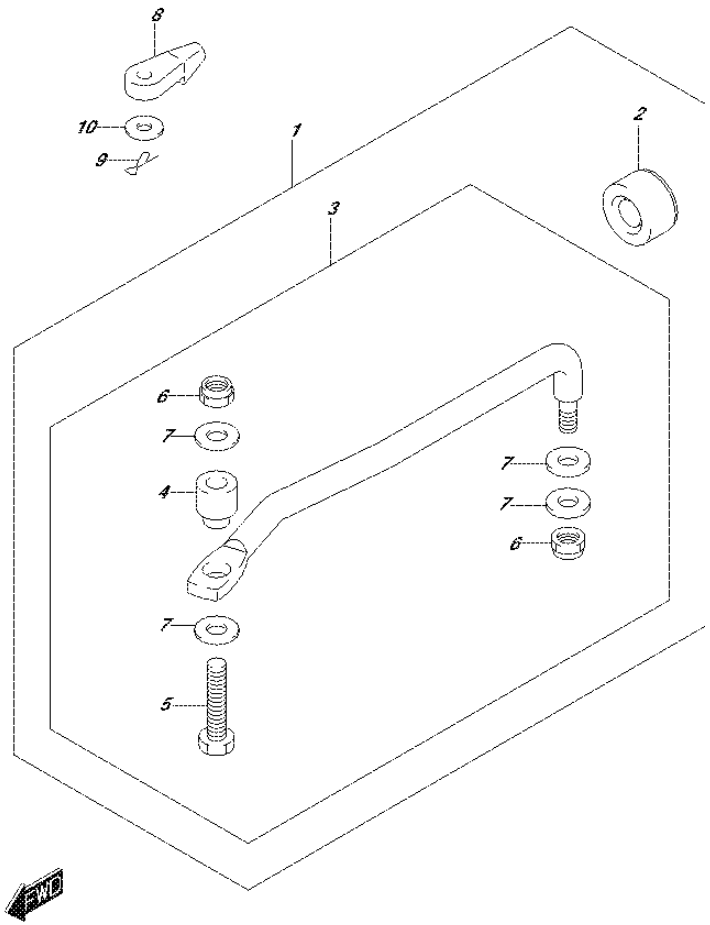

FIG.442J (2-I-4) DRAG LINK (DF90ATH E01)

REF NO.	PART NO.	DESCRIPTION	Q'TY	REMARKS
1	67700-87L01	LINK SET, DRAG	1	OPT
2	41161-94400	.SEAL, STEERING CABLE	1	OPT
3	67701-87L01	.LINK, DRAG	1	OPT
4	67721-87L00	..SPACER	1	OPT
5	67725-99E10	..BOLT, DRAG LINK	1	OPT
6	67726-99E00	..NUT	2	OPT
7	67728-99E00	..WASHER	4	OPT
8	67467-89J01	CONNECTOR, REMOCON CABLE	2	
9	09385-06012	CLIP	2	
10	09160-06055	WASHER (7X12X1)	2	

FIG.442K

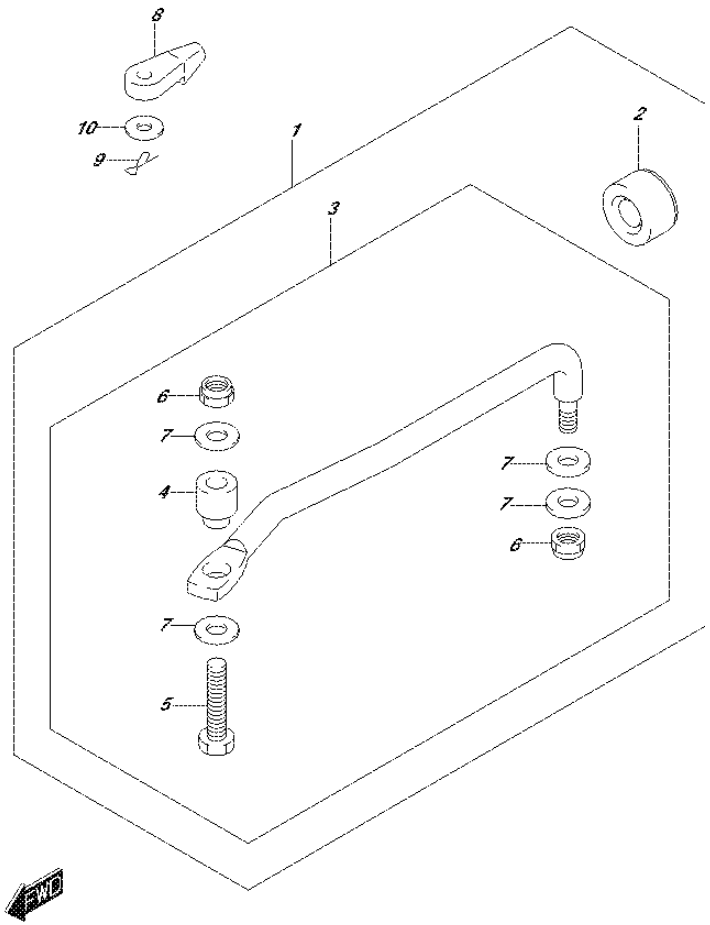

FIG.442K (2-I-5) DRAG LINK (DF90ATH E40)

REF NO.	PART NO.	DESCRIPTION	Q'TY	REMARKS
1	67700-87L01	LINK SET, DRAG	1	OPT
2	41161-94400	.SEAL, STEERING CABLE	1	OPT
3	67701-87L01	.LINK, DRAG	1	OPT
4	67721-87L00	..SPACER	1	OPT
5	67725-99E10	..BOLT, DRAG LINK	1	OPT
6	67726-99E00	..NUT	2	OPT
7	67728-99E00	..WASHER	4	OPT
8	67467-89J01	CONNECTOR, REMOCON CABLE	2	
9	09385-06012	CLIP	2	
10	09160-06055	WASHER (7X12X1)	2	

FIG.444A

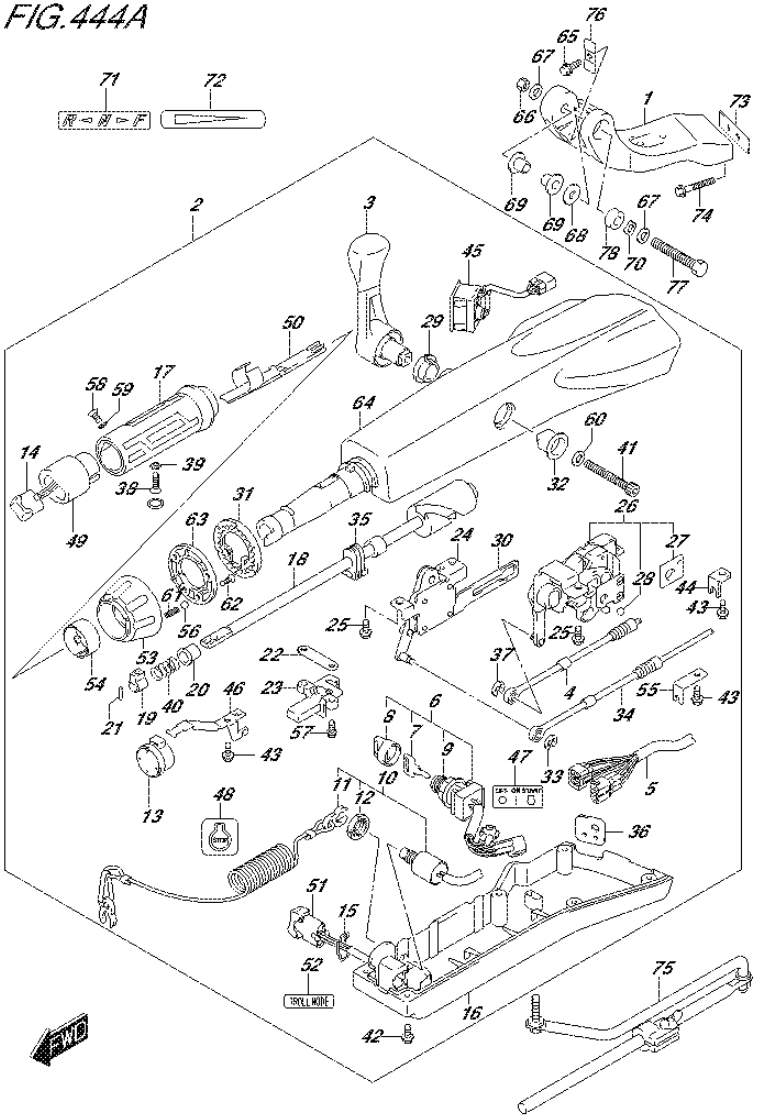

FIG.444A (2-I-6) TILLER HANDLE (DF70ATH E01)

REF NO.	PART NO.	DESCRIPTION	Q'TY	REMARKS
1	43761-88L01-0EP	BRACKET, TILLER HANDLE (BLACK)	1	
2	63110-87L11-0EP	HANDLE ASSY, TILLER (BLACK)	1	
3	21110-88L00	.LEVER, SHIFT	1	
4	23230-90J10	.CABLE, SHIFT	1	
5	36620-87L00	.WIRE ASSY, HARNESS	1	
6	37110-87L01	.SWITCH ASSY, IGNITION	1	
7-1	37141-99E00	..KEY (931)	1	
7-2	37141-99E10	..KEY (932)	1	
7-3	37141-99E20	..KEY (933)	1	
7-4	37141-99E30	..KEY (934)	1	
7-5	37141-99E40	..KEY (935)	1	
7-6	37141-99E50	..KEY (936)	1	
7-7	37141-99E60	..KEY (937)	1	
7-8	37141-99E70	..KEY (938)	1	
7-9	37141-99E80	..KEY (939)	1	
7-10	37141-99E90	..KEY (940)	1	
7-11	37141-99EA0	..KEY (941)	1	
7-12	37141-99EB0	..KEY (942)	1	
8	37143-99E00	..CAP, KEY	1	
9	37149-93J00	..CAP, CYLINDER BODY	1	
10	37820-87L01	.SWITCH ASSY, EMERGENCY	1	
11	37823-92E01	..PLATE, LOCK	1	
12	37826-92J00	..NUT	1	
13	38500-93J90	.BUZZER	1	
14	37850-87L00	.SWITCH ASSY, PTT	1	
15	37852-87J00	.PLATE, TRIM SWITCH	1	
16	63121-88L00	.COVER, UNDER	1	
17	63210-88L00	.GRIP, HANDLE	1	
18	63221-88L00	.SHAFT, THROTTLE	1	
19	63223-92D00	.STOPPER, HANDLE ROD	1	
20	63225-88L00	.BUSH, HANDLE ROD	1	
21	63227-93200	.PIN, HANDLE ROD	1	
22	63235-88L00	.PLATE, THROTTLE SHAFT	1	
23	63246-88L00	.STOPPER THROTTLE ADJ	1	

FIG.444A

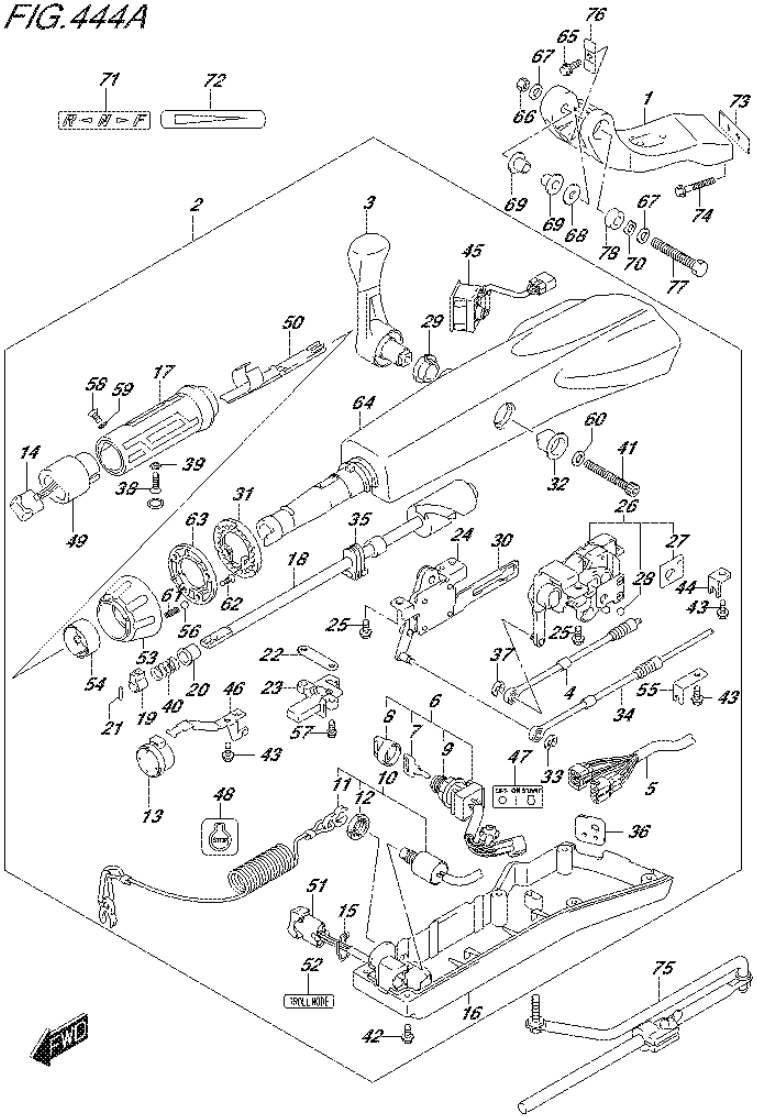

FIG.444A (2-I-7) TILLER HANDLE (DF70ATH E01)

REF NO.	PART NO.	DESCRIPTION	Q'TY	REMARKS
24	63250-88L00	.ARM ASSY, THROTTLE	1	
25	63251-87J00	.BOLT, SHIFT GEAR ASSY	4	
26	63260-88L00	.GEAR ASSY, SHIFT	1	
27	63272-87J00	..PLATE, BALL GUIDE	1	
28	63273-87J00	..BALL	1	
29	63262-87J00	.BUSH, SHIFT LEVER	1	
30	63271-87J00	.PLATE, LOCK	1	
31	63248-99J00	.PLATE, THROTTLE ADJ NOTCH	1	
32	63261-87J00	.BUSH, SHIFT GEAR	1	
33	63274-87J00	.E RING	1	
34	63610-87J00	.CABLE, THROTTLE	1	
35	37853-88L90	.GROMMET, PTT SWITCH LEAD	1	
36	63626-88L00	.GROMMET, WIRE HARNESS	1	
37	67292-87J00	.E RING	2	
38	09126-06015	.SCREW (6X23)	1	
39	09163-06001	.LOCK WASHER	1	
40	09440-12027	.SPRING	1	
41	21112-88L00	.BOLT SHIFT LEVER	1	
42	09125-05047	.SCREW (5X14)	6	
43	63611-88L00	.BOLT CLAMP BRACKET	3	
44	63612-87J00	.BRACKET, CLAMP	1	
45	34200-87L00	.TACHOMETER ASSY, WITH MONITOR	1	
46	36617-88L90	.CLAMP PLATE, MAIN HARNESS	1	
47	37112-88L90	.LABEL, IGNITION SWITCH	1	
48	37835-95D00	.LABEL, STOP	1	
49	37851-88L90	.BASE, PTT SWITCH	1	
50	37852-88L90	.HARNESS, GUIDE	1	
51	37861-87L10	.SWITCH, TROLLING CONTROL	1	
52	37864-88L90	.LABEL, TROLL MODE	1	
53	63244-99J00	.KNOB, THROTTLE ADJ	1	
54	63245-99J00	.BUSH, THROTTLE ADJ	1	
55	63612-88L10	.BRACKET, CLAMP SHIFT	1	

FIG.444A

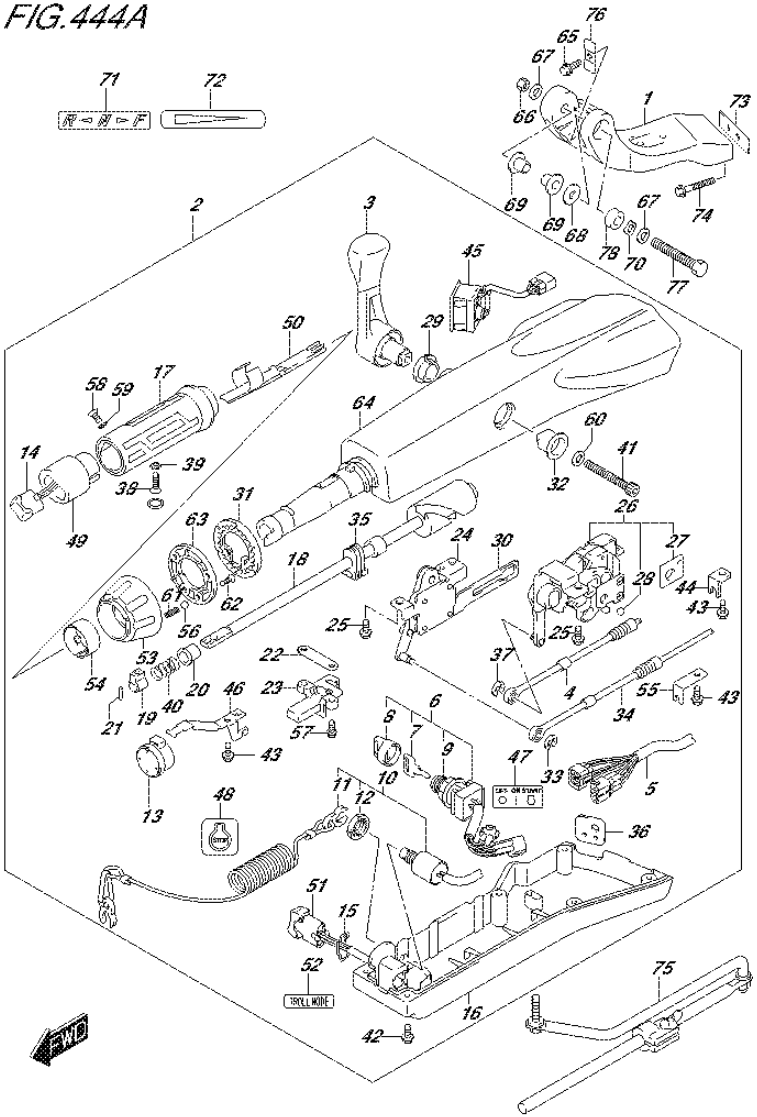

FIG.444A (2-I-8) TILLER HANDLE (DF70ATH E01)

REF NO.	PART NO.	DESCRIPTION	Q'TY	REMARKS
56	09260-10006	.BALL	1	
57	63251-88L90	.BOLT	2	
58	37855-88L90	.SCREW,THROTTLE GRIP	1	
59	37854-88L90	.WASHER,THROTTLE GRIP	1	
60	63258-88L00	.WASHER	1	
61	09440-06037	.SPRING	1	
62	03522-05169	.SCREW	3	
63	63247-99J00	.PLATE,THROTTLE ADJ KNOB	1	
64	63111-88L00-0EP	.HOUSING, TILLER HANDLE (BLACK)	1	
65	09116-08137	BOLT (8X22)	1	
66	09159-12014	NUT	1	
67	09160-12066	WASHER (12.5X22X2.5)	2	
68	09160-12124	WASHER (12.5X32X1.5)	1	
69	63115-88L00	BUSH, TILLER HANDLE PIVOT	2	
70	09164-13010	WASHER	1	
71	21131-88L00	MARK, CLUTCH SHIFT	1	
72	63215-93110	MARK, HANDLE GRIP	1	
73	43776-87L00	SPACER, STRG BRKT	1	
74	09116-10150	BOLT (10X55)	2	
75	43770-99E03	ADJUSTER ASSY, STEERING	1	
76	63132-88L00	STOPPER, TILLER HANDLE	1	
77	43762-88L00	BOLT TILLER HANDLE PIVOT	1	
78	43768-88L00	SPACER, TILLER HANDLE	1	

FIG.444B

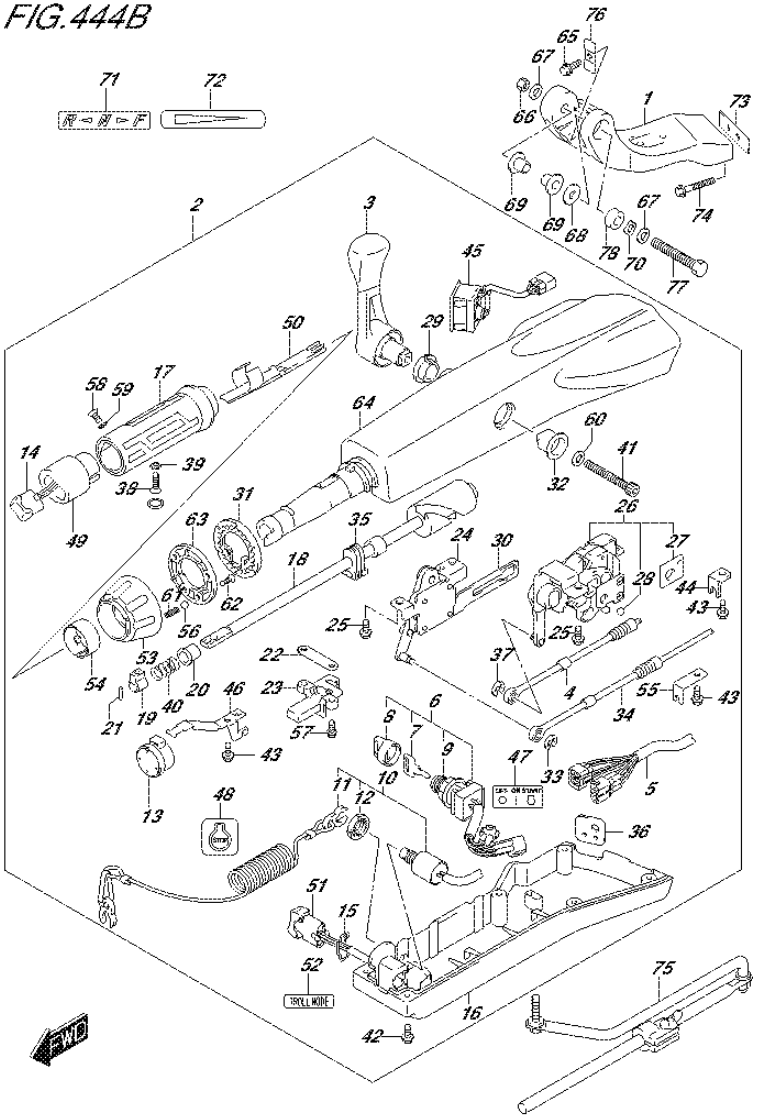

FIG.444B (2-I-9) TILLER HANDLE (DF70ATH E40)

REF NO.	PART NO.	DESCRIPTION	Q'TY	REMARKS
1	43761-88L01-0EP	BRACKET, TILLER HANDLE (BLACK)	1	
2	63110-87L11-0EP	HANDLE ASSY, TILLER (BLACK)	1	
3	21110-88L00	.LEVER, SHIFT	1	
4	23230-90J10	.CABLE, SHIFT	1	
5	36620-87L00	.WIRE ASSY, HARNESS	1	
6	37110-87L01	.SWITCH ASSY, IGNITION	1	
7-1	37141-99E00	..KEY (931)	1	
7-2	37141-99E10	..KEY (932)	1	
7-3	37141-99E20	..KEY (933)	1	
7-4	37141-99E30	..KEY (934)	1	
7-5	37141-99E40	..KEY (935)	1	
7-6	37141-99E50	..KEY (936)	1	
7-7	37141-99E60	..KEY (937)	1	
7-8	37141-99E70	..KEY (938)	1	
7-9	37141-99E80	..KEY (939)	1	
7-10	37141-99E90	..KEY (940)	1	
7-11	37141-99EA0	..KEY (941)	1	
7-12	37141-99EB0	..KEY (942)	1	
8	37143-99E00	..CAP, KEY	1	
9	37149-93J00	..CAP, CYLINDER BODY	1	
10	37820-87L01	.SWITCH ASSY, EMERGENCY	1	
11	37823-92E01	..PLATE, LOCK	1	
12	37826-92J00	..NUT	1	
13	38500-93J90	.BUZZER	1	
14	37850-87L00	.SWITCH ASSY, PTT	1	
15	37852-87J00	.PLATE, TRIM SWITCH	1	
16	63121-88L00	.COVER, UNDER	1	
17	63210-88L00	.GRIP, HANDLE	1	
18	63221-88L00	.SHAFT, THROTTLE	1	
19	63223-92D00	.STOPPER, HANDLE ROD	1	
20	63225-88L00	.BUSH, HANDLE ROD	1	
21	63227-93200	.PIN, HANDLE ROD	1	
22	63235-88L00	.PLATE, THROTTLE SHAFT	1	
23	63246-88L00	.STOPPER THROTTLE ADJ	1	

FIG.444B

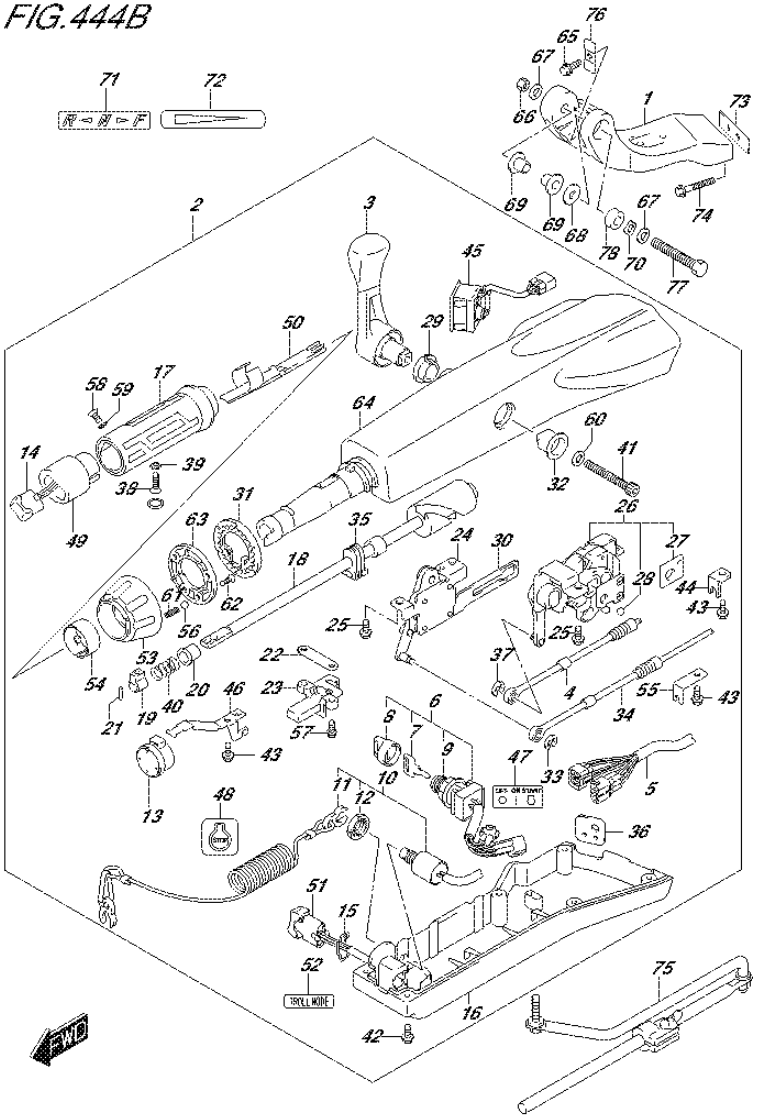

FIG.444B (2-I-10) TILLER HANDLE (DF70ATH E40)

REF NO.	PART NO.	DESCRIPTION	Q'TY	REMARKS
24	63250-88L00	.ARM ASSY, THROTTLE	1	
25	63251-87J00	.BOLT, SHIFT GEAR ASSY	4	
26	63260-88L00	.GEAR ASSY, SHIFT	1	
27	63272-87J00	..PLATE, BALL GUIDE	1	
28	63273-87J00	..BALL	1	
29	63262-87J00	.BUSH, SHIFT LEVER	1	
30	63271-87J00	.PLATE, LOCK	1	
31	63248-99J00	.PLATE, THROTTLE ADJ NOTCH	1	
32	63261-87J00	.BUSH, SHIFT GEAR	1	
33	63274-87J00	.E RING	1	
34	63610-87J00	.CABLE, THROTTLE	1	
35	37853-88L90	.GROMMET, PTT SWITCH LEAD	1	
36	63626-88L00	.GROMMET, WIRE HARNESS	1	
37	67292-87J00	.E RING	2	
38	09126-06015	.SCREW (6X23)	1	
39	09163-06001	.LOCK WASHER	1	
40	09440-12027	.SPRING	1	
41	21112-88L00	.BOLT SHIFT LEVER	1	
42	09125-05047	.SCREW (5X14)	6	
43	63611-88L00	.BOLT CLAMP BRACKET	3	
44	63612-87J00	.BRACKET, CLAMP	1	
45	34200-87L00	.TACHOMETER ASSY, WITH MONITOR	1	
46	36617-88L90	.CLAMP PLATE, MAIN HARNESS	1	
47	37112-88L90	.LABEL, IGNITION SWITCH	1	
48	37835-95D00	.LABEL, STOP	1	
49	37851-88L90	.BASE, PTT SWITCH	1	
50	37852-88L90	.HARNESS, GUIDE	1	
51	37861-87L10	.SWITCH, TROLLING CONTROL	1	
52	37864-88L90	.LABEL, TROLL MODE	1	
53	63244-99J00	.KNOB, THROTTLE ADJ	1	
54	63245-99J00	.BUSH, THROTTLE ADJ	1	
55	63612-88L10	.BRACKET, CLAMP SHIFT	1	

FIG.444B

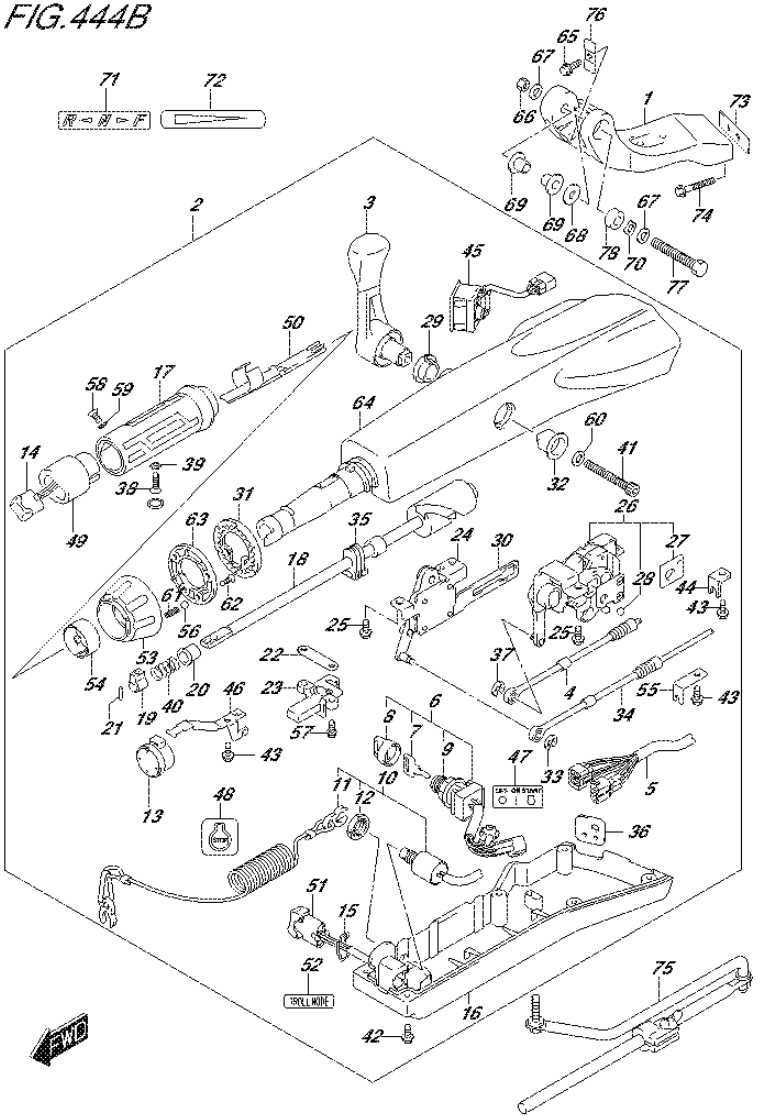

FIG.444B (2-I-11) TILLER HANDLE (DF70ATH E40)

REF NO.	PART NO.	DESCRIPTION	Q'TY	REMARKS
56	09260-10006	.BALL	1	
57	63251-88L90	.BOLT	2	
58	37855-88L90	.SCREW,THROTTLE GRIP	1	
59	37854-88L90	.WASHER,THROTTLE GRIP	1	
60	63258-88L00	.WASHER	1	
61	09440-06037	.SPRING	1	
62	03522-05169	.SCREW	3	
63	63247-99J00	.PLATE,THROTTLE ADJ KNOB	1	
64	63111-88L00-0EP	.HOUSING, TILLER HANDLE (BLACK)	1	
65	09116-08137	BOLT (8X22)	1	
66	09159-12014	NUT	1	
67	09160-12066	WASHER (12.5X22X2.5)	2	
68	09160-12124	WASHER (12.5X32X1.5)	1	
69	63115-88L00	BUSH, TILLER HANDLE PIVOT	2	
70	09164-13010	WASHER	1	
71	21131-88L00	MARK, CLUTCH SHIFT	1	
72	63215-93110	MARK, HANDLE GRIP	1	
73	43776-87L00	SPACER, STRG BRKT	1	
74	09116-10150	BOLT (10X55)	2	
75	43770-99E03	ADJUSTER ASSY, STEERING	1	
76	63132-88L00	STOPPER, TILLER HANDLE	1	
77	43762-88L00	BOLT TILLER HANDLE PIVOT	1	
78	43768-88L00	SPACER, TILLER HANDLE	1	

FIG.444C

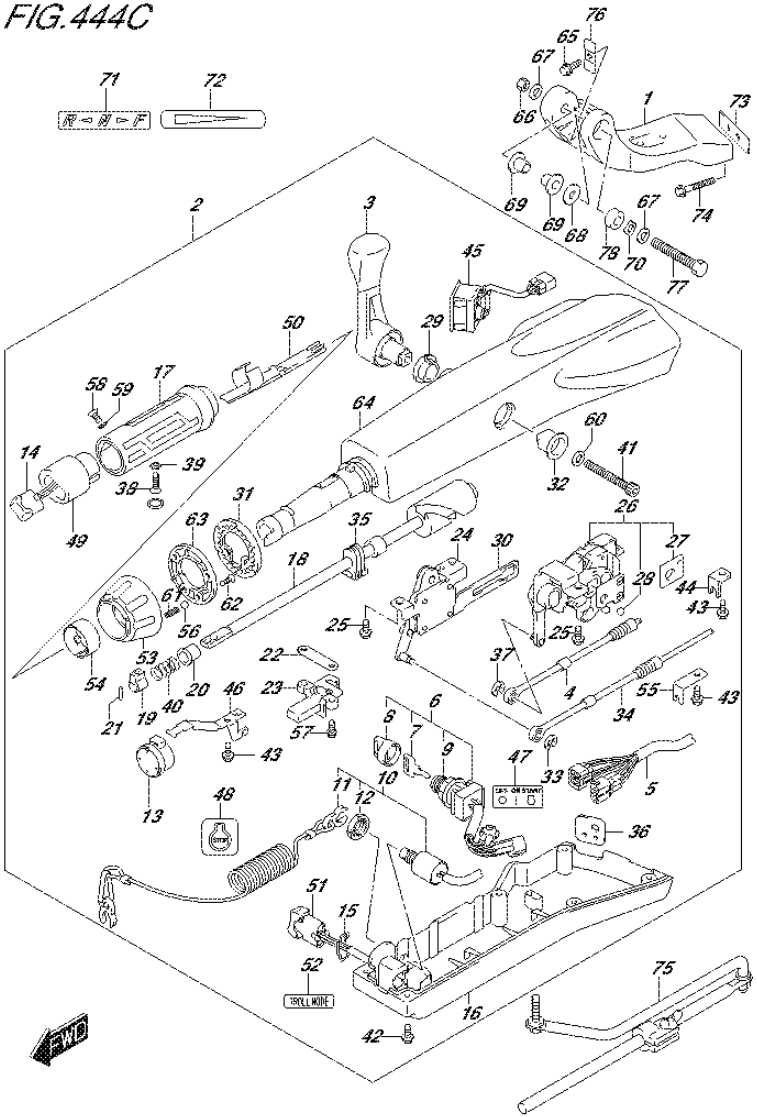

FIG.444C (2-I-12) TILLER HANDLE (DF90ATH E01)

REF NO.	PART NO.	DESCRIPTION	Q'TY	REMARKS
1	43761-88L01-0EP	BRACKET, TILLER HANDLE (BLACK)	1	
2	63110-87L11-0EP	HANDLE ASSY, TILLER (BLACK)	1	
3	21110-88L00	.LEVER, SHIFT	1	
4	23230-90J10	.CABLE, SHIFT	1	
5	36620-87L00	.WIRE ASSY, HARNESS	1	
6	37110-87L01	.SWITCH ASSY, IGNITION	1	
7-1	37141-99E00	..KEY (931)	1	
7-2	37141-99E10	..KEY (932)	1	
7-3	37141-99E20	..KEY (933)	1	
7-4	37141-99E30	..KEY (934)	1	
7-5	37141-99E40	..KEY (935)	1	
7-6	37141-99E50	..KEY (936)	1	
7-7	37141-99E60	..KEY (937)	1	
7-8	37141-99E70	..KEY (938)	1	
7-9	37141-99E80	..KEY (939)	1	
7-10	37141-99E90	..KEY (940)	1	
7-11	37141-99EA0	..KEY (941)	1	
7-12	37141-99EB0	..KEY (942)	1	
8	37143-99E00	..CAP, KEY	1	
9	37149-93J00	..CAP, CYLINDER BODY	1	
10	37820-87L01	.SWITCH ASSY, EMERGENCY	1	
11	37823-92E01	..PLATE, LOCK	1	
12	37826-92J00	..NUT	1	
13	38500-93J90	.BUZZER	1	
14	37850-87L00	.SWITCH ASSY, PTT	1	
15	37852-87J00	.PLATE, TRIM SWITCH	1	
16	63121-88L00	.COVER, UNDER	1	
17	63210-88L00	.GRIP, HANDLE	1	
18	63221-88L00	.SHAFT, THROTTLE	1	
19	63223-92D00	.STOPPER, HANDLE ROD	1	
20	63225-88L00	.BUSH, HANDLE ROD	1	
21	63227-93200	.PIN, HANDLE ROD	1	
22	63235-88L00	.PLATE, THROTTLE SHAFT	1	
23	63246-88L00	.STOPPER THROTTLE ADJ	1	

FIG.444C

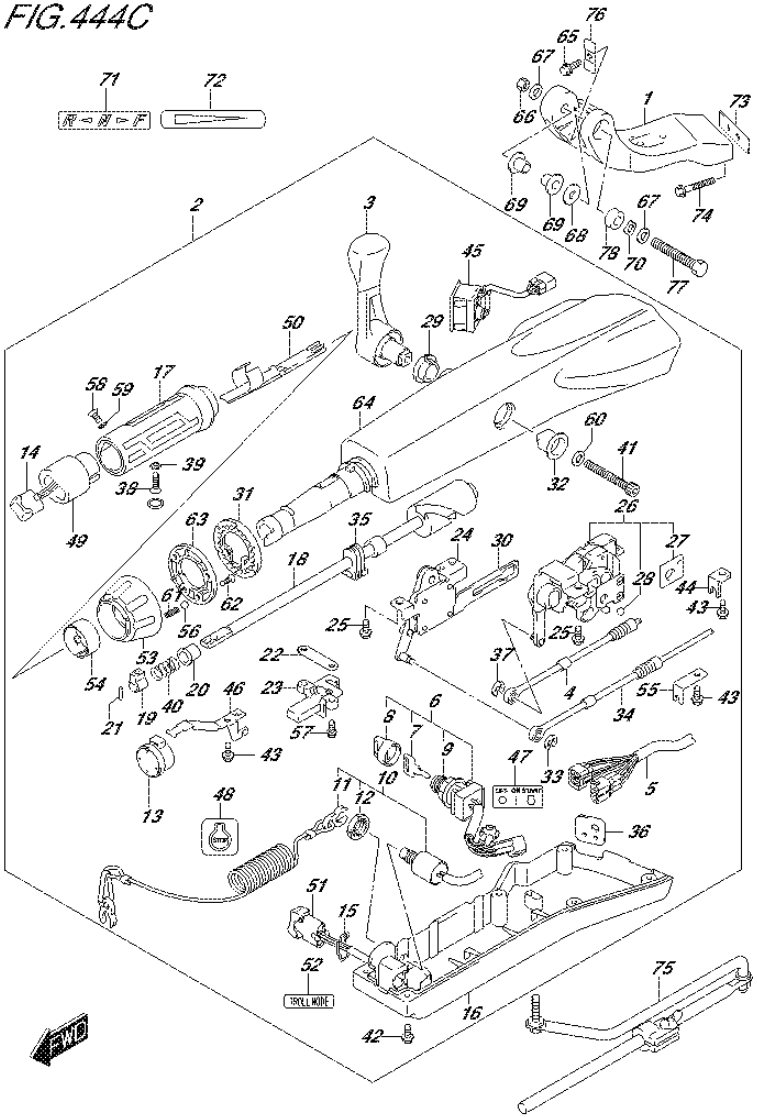

FIG.444C (2-I-13) TILLER HANDLE (DF90ATH E01)

REF NO.	PART NO.	DESCRIPTION	Q'TY	REMARKS
24	63250-88L00	.ARM ASSY, THROTTLE	1	
25	63251-87J00	.BOLT, SHIFT GEAR ASSY	4	
26	63260-88L00	.GEAR ASSY, SHIFT	1	
27	63272-87J00	..PLATE, BALL GUIDE	1	
28	63273-87J00	..BALL	1	
29	63262-87J00	.BUSH, SHIFT LEVER	1	
30	63271-87J00	.PLATE, LOCK	1	
31	63248-99J00	.PLATE, THROTTLE ADJ NOTCH	1	
32	63261-87J00	.BUSH, SHIFT GEAR	1	
33	63274-87J00	.E RING	1	
34	63610-87J00	.CABLE, THROTTLE	1	
35	37853-88L90	.GROMMET, PTT SWITCH LEAD	1	
36	63626-88L00	.GROMMET, WIRE HARNESS	1	
37	67292-87J00	.E RING	2	
38	09126-06015	.SCREW (6X23)	1	
39	09163-06001	.LOCK WASHER	1	
40	09440-12027	.SPRING	1	
41	21112-88L00	.BOLT SHIFT LEVER	1	
42	09125-05047	.SCREW (5X14)	6	
43	63611-88L00	.BOLT CLAMP BRACKET	3	
44	63612-87J00	.BRACKET, CLAMP	1	
45	34200-87L00	.TACHOMETER ASSY, WITH MONITOR	1	
46	36617-88L90	.CLAMP PLATE, MAIN HARNESS	1	
47	37112-88L90	.LABEL, IGNITION SWITCH	1	
48	37835-95D00	.LABEL, STOP	1	
49	37851-88L90	.BASE, PTT SWITCH	1	
50	37852-88L90	.HARNESS, GUIDE	1	
51	37861-87L10	.SWITCH, TROLLING CONTROL	1	
52	37864-88L90	.LABEL, TROLL MODE	1	
53	63244-99J00	.KNOB, THROTTLE ADJ	1	
54	63245-99J00	.BUSH, THROTTLE ADJ	1	
55	63612-88L10	.BRACKET, CLAMP SHIFT	1	

FIG.444C

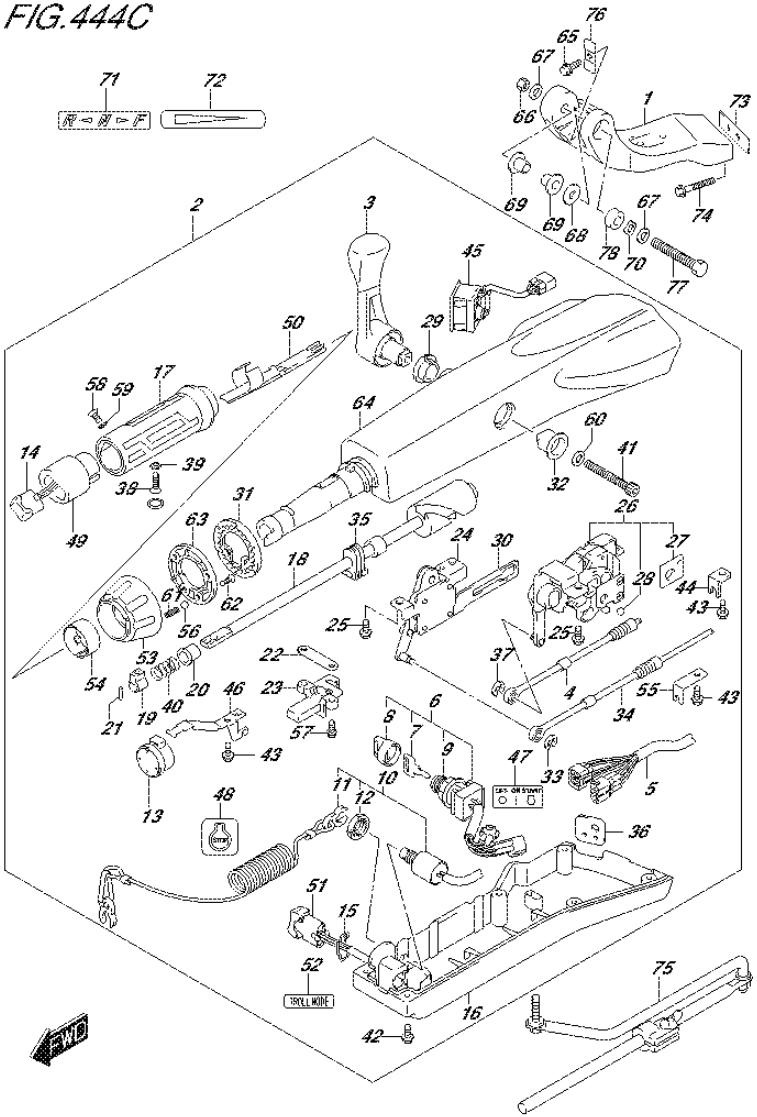

FIG.444C (2-I-14) TILLER HANDLE (DF90ATH E01)

REF NO.	PART NO.	DESCRIPTION	Q'TY	REMARKS
56	09260-10006	.BALL	1	
57	63251-88L90	.BOLT	2	
58	37855-88L90	.SCREW,THROTTLE GRIP	1	
59	37854-88L90	.WASHER,THROTTLE GRIP	1	
60	63258-88L00	.WASHER	1	
61	09440-06037	.SPRING	1	
62	03522-05169	.SCREW	3	
63	63247-99J00	.PLATE,THROTTLE ADJ KNOB	1	
64	63111-88L00-0EP	.HOUSING, TILLER HANDLE (BLACK)	1	
65	09116-08137	BOLT (8X22)	1	
66	09159-12014	NUT	1	
67	09160-12066	WASHER (12.5X22X2.5)	2	
68	09160-12124	WASHER (12.5X32X1.5)	1	
69	63115-88L00	BUSH, TILLER HANDLE PIVOT	2	
70	09164-13010	WASHER	1	
71	21131-88L00	MARK, CLUTCH SHIFT	1	
72	63215-93110	MARK, HANDLE GRIP	1	
73	43776-87L00	SPACER, STRG BRKT	1	
74	09116-10150	BOLT (10X55)	2	
75	43770-99E03	ADJUSTER ASSY, STEERING	1	
76	63132-88L00	STOPPER, TILLER HANDLE	1	
77	43762-88L00	BOLT TILLER HANDLE PIVOT	1	
78	43768-88L00	SPACER, TILLER HANDLE	1	

FIG.444D

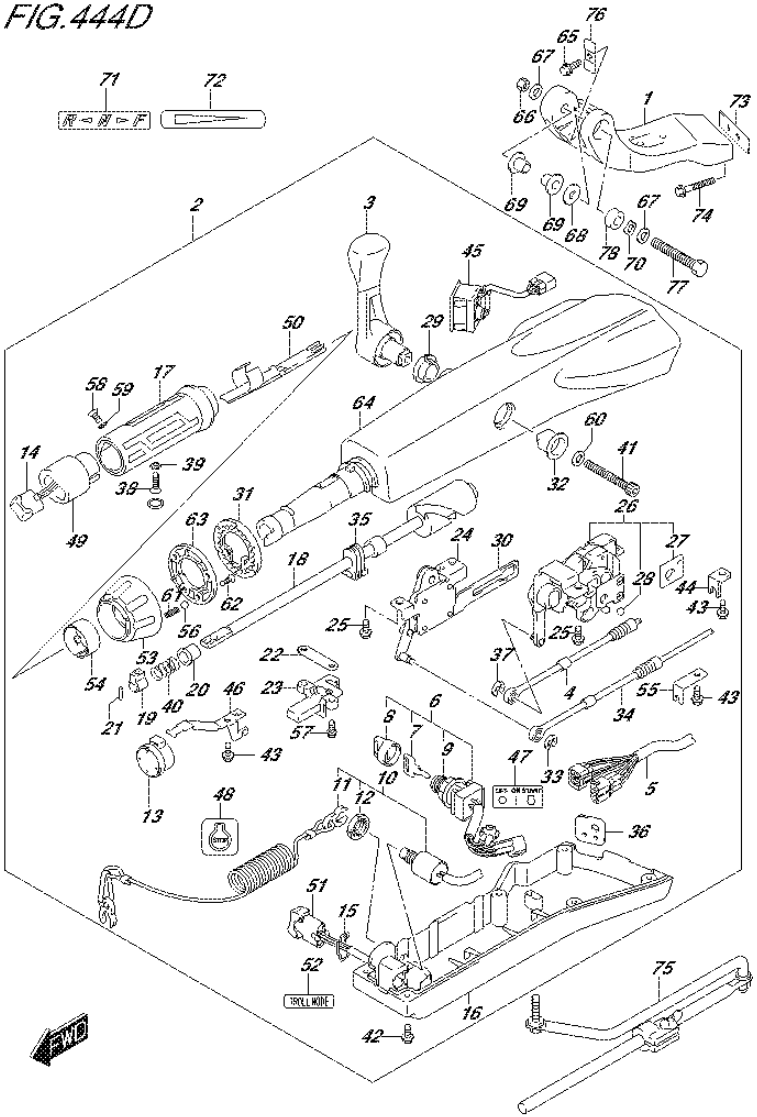

FIG.444D (2-I-15) TILLER HANDLE (DF90ATH E40)

REF NO.	PART NO.	DESCRIPTION	Q'TY	REMARKS
1	43761-88L01-0EP	BRACKET, TILLER HANDLE (BLACK)	1	
2	63110-87L11-0EP	HANDLE ASSY, TILLER (BLACK)	1	
3	21110-88L00	.LEVER, SHIFT	1	
4	23230-90J10	.CABLE, SHIFT	1	
5	36620-87L00	.WIRE ASSY, HARNESS	1	
6	37110-87L01	.SWITCH ASSY, IGNITION	1	
7-1	37141-99E00	..KEY (931)	1	
7-2	37141-99E10	..KEY (932)	1	
7-3	37141-99E20	..KEY (933)	1	
7-4	37141-99E30	..KEY (934)	1	
7-5	37141-99E40	..KEY (935)	1	
7-6	37141-99E50	..KEY (936)	1	
7-7	37141-99E60	..KEY (937)	1	
7-8	37141-99E70	..KEY (938)	1	
7-9	37141-99E80	..KEY (939)	1	
7-10	37141-99E90	..KEY (940)	1	
7-11	37141-99EA0	..KEY (941)	1	
7-12	37141-99EB0	..KEY (942)	1	
8	37143-99E00	..CAP, KEY	1	
9	37149-93J00	..CAP, CYLINDER BODY	1	
10	37820-87L01	.SWITCH ASSY, EMERGENCY	1	
11	37823-92E01	..PLATE, LOCK	1	
12	37826-92J00	..NUT	1	
13	38500-93J90	.BUZZER	1	
14	37850-87L00	.SWITCH ASSY, PTT	1	
15	37852-87J00	.PLATE, TRIM SWITCH	1	
16	63121-88L00	.COVER, UNDER	1	
17	63210-88L00	.GRIP, HANDLE	1	
18	63221-88L00	.SHAFT, THROTTLE	1	
19	63223-92D00	.STOPPER, HANDLE ROD	1	
20	63225-88L00	.BUSH, HANDLE ROD	1	
21	63227-93200	.PIN, HANDLE ROD	1	
22	63235-88L00	.PLATE, THROTTLE SHAFT	1	
23	63246-88L00	.STOPPER THROTTLE ADJ	1	

FIG.444D

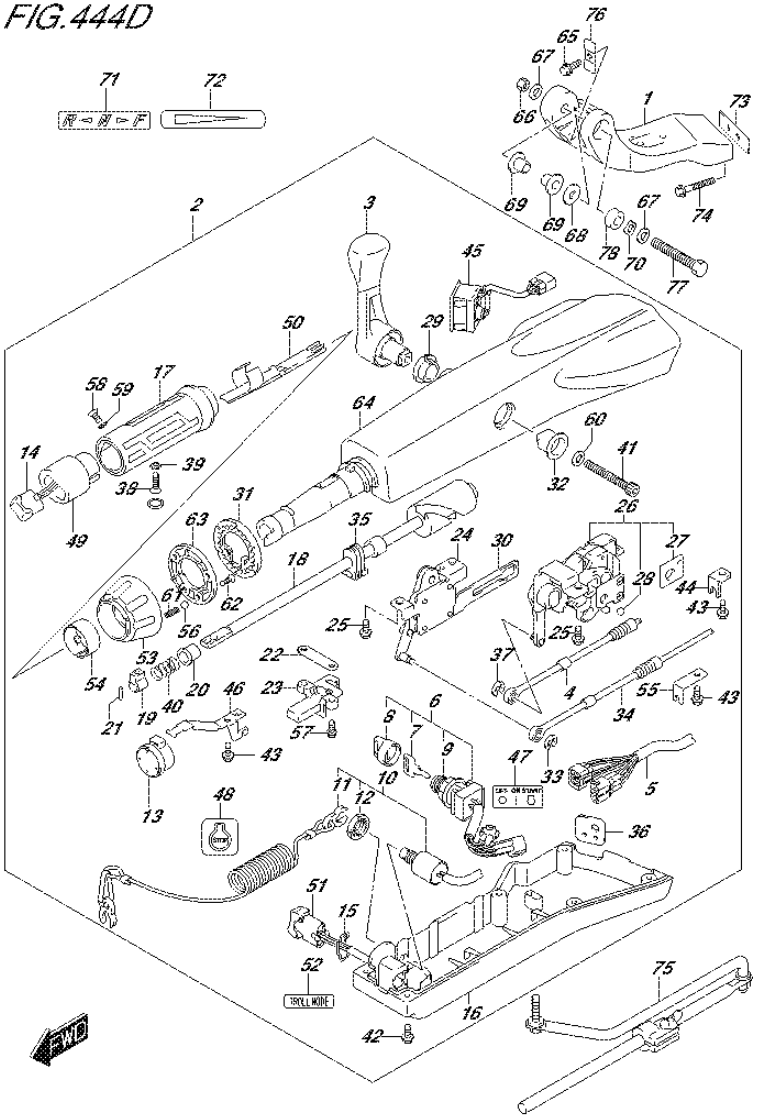

FIG.444D (2-J-2) TILLER HANDLE (DF90ATH E40)

REF NO.	PART NO.	DESCRIPTION	Q'TY	REMARKS
24	63250-88L00	.ARM ASSY, THROTTLE	1	
25	63251-87J00	.BOLT, SHIFT GEAR ASSY	4	
26	63260-88L00	.GEAR ASSY, SHIFT	1	
27	63272-87J00	..PLATE, BALL GUIDE	1	
28	63273-87J00	..BALL	1	
29	63262-87J00	.BUSH, SHIFT LEVER	1	
30	63271-87J00	.PLATE, LOCK	1	
31	63248-99J00	.PLATE, THROTTLE ADJ NOTCH	1	
32	63261-87J00	.BUSH, SHIFT GEAR	1	
33	63274-87J00	.E RING	1	
34	63610-87J00	.CABLE, THROTTLE	1	
35	37853-88L90	.GROMMET, PTT SWITCH LEAD	1	
36	63626-88L00	.GROMMET, WIRE HARNESS	1	
37	67292-87J00	.E RING	2	
38	09126-06015	.SCREW (6X23)	1	
39	09163-06001	.LOCK WASHER	1	
40	09440-12027	.SPRING	1	
41	21112-88L00	.BOLT SHIFT LEVER	1	
42	09125-05047	.SCREW (5X14)	6	
43	63611-88L00	.BOLT CLAMP BRACKET	3	
44	63612-87J00	.BRACKET, CLAMP	1	
45	34200-87L00	.TACHOMETER ASSY, WITH MONITOR	1	
46	36617-88L90	.CLAMP PLATE, MAIN HARNESS	1	
47	37112-88L90	.LABEL, IGNITION SWITCH	1	
48	37835-95D00	.LABEL, STOP	1	
49	37851-88L90	.BASE, PTT SWITCH	1	
50	37852-88L90	.HARNESS, GUIDE	1	
51	37861-87L10	.SWITCH, TROLLING CONTROL	1	
52	37864-88L90	.LABEL, TROLL MODE	1	
53	63244-99J00	.KNOB, THROTTLE ADJ	1	
54	63245-99J00	.BUSH, THROTTLE ADJ	1	
55	63612-88L10	.BRACKET, CLAMP SHIFT	1	

FIG.444D

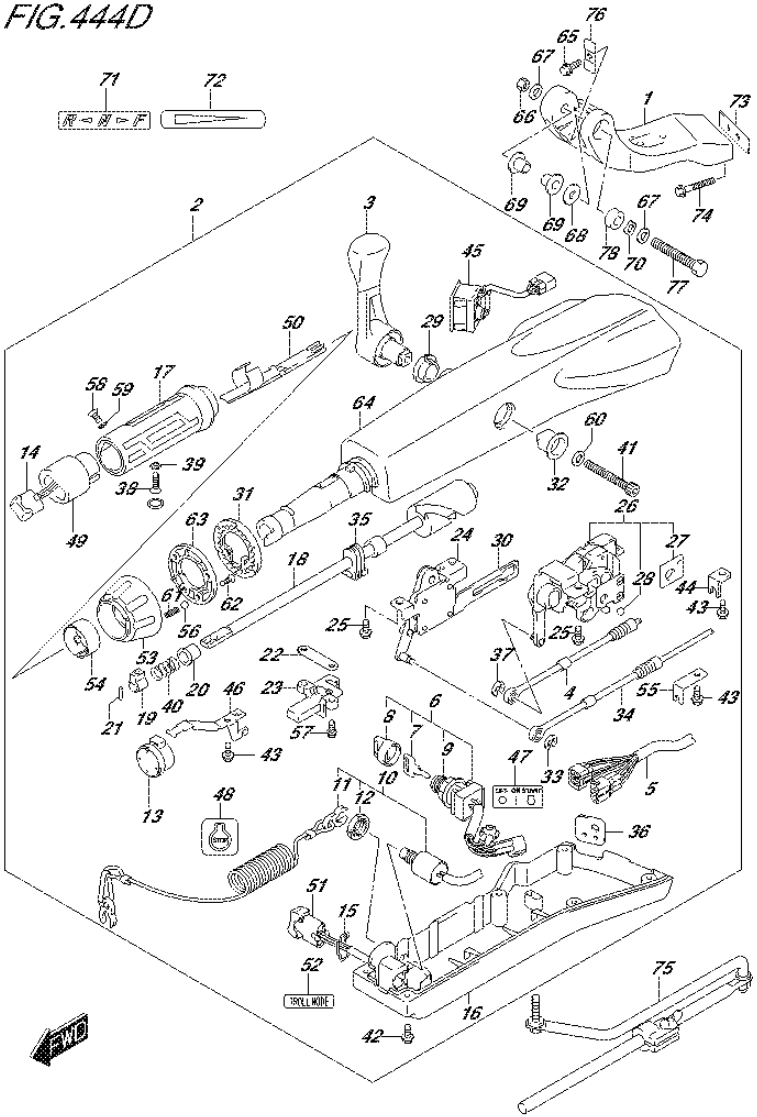

FIG.444D (2-J-3) TILLER HANDLE (DF90ATH E40)

REF NO.	PART NO.	DESCRIPTION	Q'TY	REMARKS
56	09260-10006	.BALL	1	
57	63251-88L90	.BOLT	2	
58	37855-88L90	.SCREW,THROTTLE GRIP	1	
59	37854-88L90	.WASHER,THROTTLE GRIP	1	
60	63258-88L00	.WASHER	1	
61	09440-06037	.SPRING	1	
62	03522-05169	.SCREW	3	
63	63247-99J00	.PLATE,THROTTLE ADJ KNOB	1	
64	63111-88L00-0EP	.HOUSING, TILLER HANDLE (BLACK)	1	
65	09116-08137	BOLT (8X22)	1	
66	09159-12014	NUT	1	
67	09160-12066	WASHER (12.5X22X2.5)	2	
68	09160-12124	WASHER (12.5X32X1.5)	1	
69	63115-88L00	BUSH, TILLER HANDLE PIVOT	2	
70	09164-13010	WASHER	1	
71	21131-88L00	MARK, CLUTCH SHIFT	1	
72	63215-93110	MARK, HANDLE GRIP	1	
73	43776-87L00	SPACER, STRG BRKT	1	
74	09116-10150	BOLT (10X55)	2	
75	43770-99E03	ADJUSTER ASSY, STEERING	1	
76	63132-88L00	STOPPER, TILLER HANDLE	1	
77	43762-88L00	BOLT TILLER HANDLE PIVOT	1	
78	43768-88L00	SPACER, TILLER HANDLE	1	

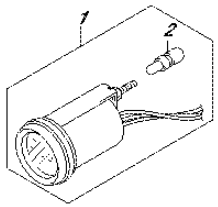

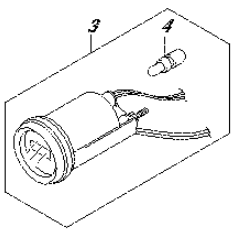

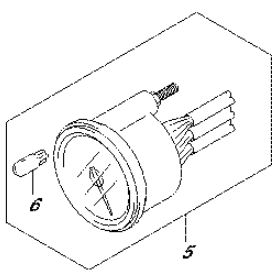

FIG.460A (2-J-4) METER (DF70A E01)

REF NO.	PART NO.	DESCRIPTION	Q'TY	REMARKS
1-1	34800-93J00	METER ASSY, TRIM	1	BLACK
1-2	34800-93J11	METER ASSY, TRIM	1	WHITE
2	09471-12103	.BULB (12V,3W,T6.5)	1	
3-1	34500-93J00	METER ASSY, HOUR	1	BLACK
3-2	34500-93J11	METER ASSY, HOUR	1	WHITE
4	09471-12103	.BULB (12V,3W,T6.5)	1	
5-1	34200-93J00	TACHOMETER ASSY, WITH MONITOR	1	BLACK
5-2	34200-93J12	TACHOMETER ASSY, WITH MONITOR	1	WHITE
6	09471-12077	.BULB (12V,1.7W)	1	

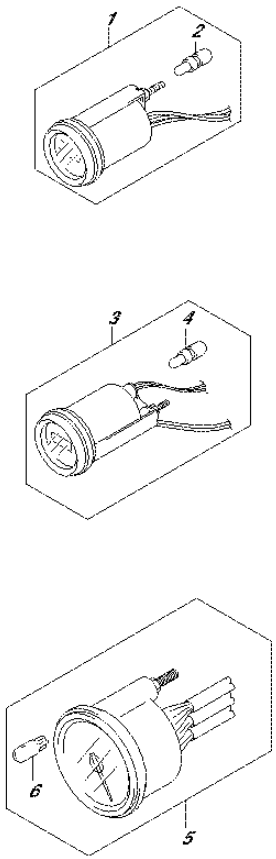

FIG.460B (2-J-5) METER (DF70A E40)

REF NO.	PART NO.	DESCRIPTION	Q'TY	REMARKS
1-1	34800-93J00	METER ASSY, TRIM	1	BLACK
1-2	34800-93J11	METER ASSY, TRIM	1	WHITE
2	09471-12103	.BULB (12V,3W,T6.5)	1	
3-1	34500-93J00	METER ASSY, HOUR	1	BLACK
3-2	34500-93J11	METER ASSY, HOUR	1	WHITE
4	09471-12103	.BULB (12V,3W,T6.5)	1	
5-1	34200-93J00	TACHOMETER ASSY, WITH MONITOR	1	BLACK
5-2	34200-93J12	TACHOMETER ASSY, WITH MONITOR	1	WHITE
6	09471-12077	.BULB (12V,1.7W)	1	

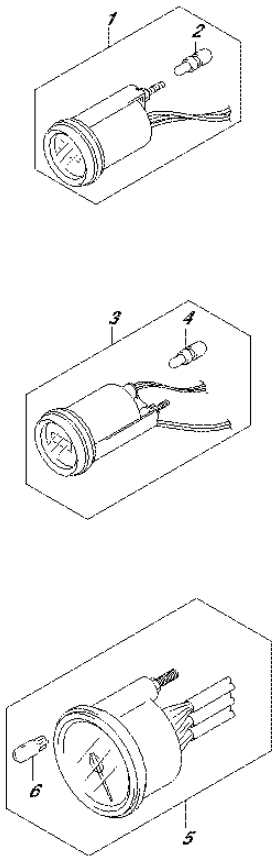

FIG.460C (2-J-6) METER (DF80A E01)

REF NO.	PART NO.	DESCRIPTION	Q'TY	REMARKS
1-1	34800-93J00	METER ASSY, TRIM	1	BLACK
1-2	34800-93J11	METER ASSY, TRIM	1	WHITE
2	09471-12103	.BULB (12V,3W,T6.5)	1	
3-1	34500-93J00	METER ASSY, HOUR	1	BLACK
3-2	34500-93J11	METER ASSY, HOUR	1	WHITE
4	09471-12103	.BULB (12V,3W,T6.5)	1	
5-1	34200-93J00	TACHOMETER ASSY, WITH MONITOR	1	BLACK
5-2	34200-93J12	TACHOMETER ASSY, WITH MONITOR	1	WHITE
6	09471-12077	.BULB (12V,1.7W)	1	

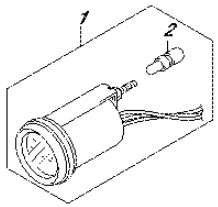

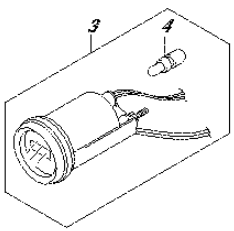

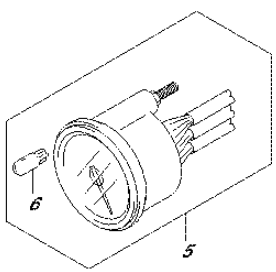

FIG.460D (2-J-7) METER (DF80A E40)

REF NO.	PART NO.	DESCRIPTION	Q'TY	REMARKS
1-1	34800-93J00	METER ASSY, TRIM	1	BLACK
1-2	34800-93J11	METER ASSY, TRIM	1	WHITE
2	09471-12103	.BULB (12V,3W,T6.5)	1	
3-1	34500-93J00	METER ASSY, HOUR	1	BLACK
3-2	34500-93J11	METER ASSY, HOUR	1	WHITE
4	09471-12103	.BULB (12V,3W,T6.5)	1	
5-1	34200-93J00	TACHOMETER ASSY, WITH MONITOR	1	BLACK
5-2	34200-93J12	TACHOMETER ASSY, WITH MONITOR	1	WHITE
6	09471-12077	.BULB (12V,1.7W)	1	

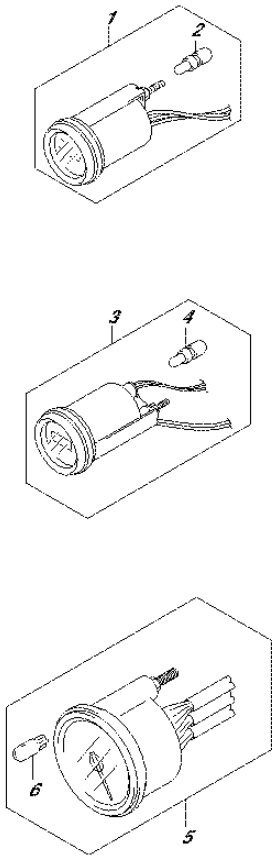

FIG.460E (2-J-8) METER (DF90A E01)

REF NO.	PART NO.	DESCRIPTION	Q'TY	REMARKS
1-1	34800-93J00	METER ASSY, TRIM	1	BLACK
1-2	34800-93J11	METER ASSY, TRIM	1	WHITE
2	09471-12103	.BULB (12V,3W,T6.5)	1	
3-1	34500-93J00	METER ASSY, HOUR	1	BLACK
3-2	34500-93J11	METER ASSY, HOUR	1	WHITE
4	09471-12103	.BULB (12V,3W,T6.5)	1	
5-1	34200-93J00	TACHOMETER ASSY, WITH MONITOR	1	BLACK
5-2	34200-93J12	TACHOMETER ASSY, WITH MONITOR	1	WHITE
6	09471-12077	.BULB (12V,1.7W)	1	

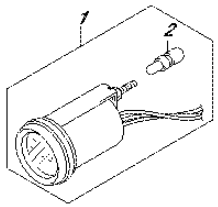

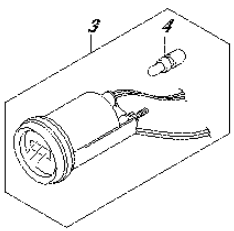

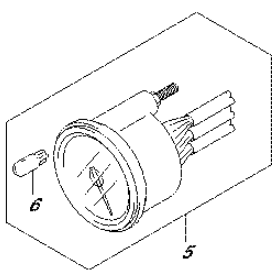

FIG.460F (2-J-9) METER (DF90A E40)

REF NO.	PART NO.	DESCRIPTION	Q'TY	REMARKS
1-1	34800-93J00	METER ASSY, TRIM	1	BLACK
1-2	34800-93J11	METER ASSY, TRIM	1	WHITE
2	09471-12103	.BULB (12V,3W,T6.5)	1	
3-1	34500-93J00	METER ASSY, HOUR	1	BLACK
3-2	34500-93J11	METER ASSY, HOUR	1	WHITE
4	09471-12103	.BULB (12V,3W,T6.5)	1	
5-1	34200-93J00	TACHOMETER ASSY, WITH MONITOR	1	BLACK
5-2	34200-93J12	TACHOMETER ASSY, WITH MONITOR	1	WHITE
6	09471-12077	.BULB (12V,1.7W)	1	

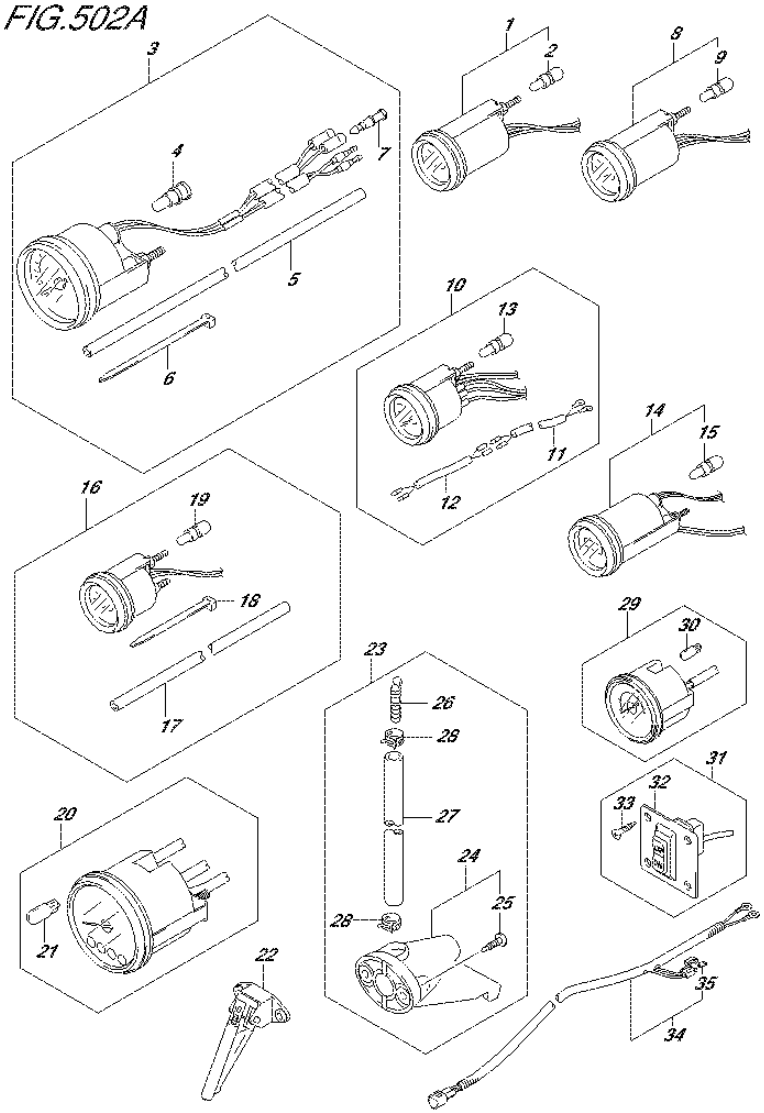

FIG.502A (2-J-10) OPT:METER (1) (DF70A E01)

REF NO.	PART NO.	DESCRIPTION	Q'TY	REMARKS
1-1	34800-93J00	METER ASSY, TRIM	1	BLACK
1-2	34800-93J11	METER ASSY, TRIM	1	WHITE
2	09471-12103	.BULB (12V,3W,T6.5)	1	
3-1	34100-93J00	SPEEDOMETER ASSY	1	MAX 130KM/H BLACK
3-2	34100-93J11	SPEEDOMETER ASSY	1	MAX 130KM/H WHITE
3-3	34100-93J20	SPEEDOMETER ASSY	1	MAX 80KM/H BLACK
3-4	34100-93J31	SPEEDOMETER ASSY	1	MAX 80KM/H WHITE
3-5	34100-93J40	SPEEDOMETER ASSY	1	MAX 45KNOTS BLACK
3-6	34100-93J51	SPEEDOMETER ASSY	1	MAX 45KNOTS WHITE
3-7	34100-93J60	SPEEDOMETER ASSY	1	MAX 65KNOTS WHITE
4	09471-12028	.BULB (12V,3.4W)	1	
5	34191-92E00	.TUBE	1	
6	09407-14407	.CLAMP (L:145)	2	
7	36615-96300	.TERMINAL, RESIN	2	
8-1	34600-93J00	METER ASSY, VOLTAGE	1	BLACK
8-2	34600-93J11	METER ASSY, VOLTAGE	1	WHITE
9	09471-12103	.BULB (12V,3W,T6.5)	1	
10-1	34300-93J00	GAUGE ASSY, FUEL	1	BLACK
10-2	34300-93J11	GAUGE ASSY, FUEL	1	WHITE
11	34310-92E00	.LEAD, FUEL GAUGE	1	
12	34360-92E00	.ADAPTER, FUEL GAUGE	1	
13	09471-12103	.BULB (12V,3W,T6.5)	1	
14-1	34500-93J00	METER ASSY, HOUR	1	BLACK
14-2	34500-93J11	METER ASSY, HOUR	1	WHITE
15	09471-12103	.BULB (12V,3W,T6.5)	1	
16-1	34650-93J20	GAUGE ASSY, WATER PRESSURE	1	15PSI BLACK
16-2	34650-93J31	GAUGE ASSY, WATER PRESSURE	1	15PSI WHITE
17	34191-92E00	.TUBE	1	
18	09407-14407	.CLAMP (L:145)	2	
19	09471-12103	.BULB (12V,3W,T6.5)	1	
20-1	34200-93J00	TACHOMETER ASSY, WITH MONITOR	1	BLACK
20-2	34200-93J12	TACHOMETER ASSY, WITH MONITOR	1	WHITE
21	09471-12077	.BULB (12V,1.7W)	1	

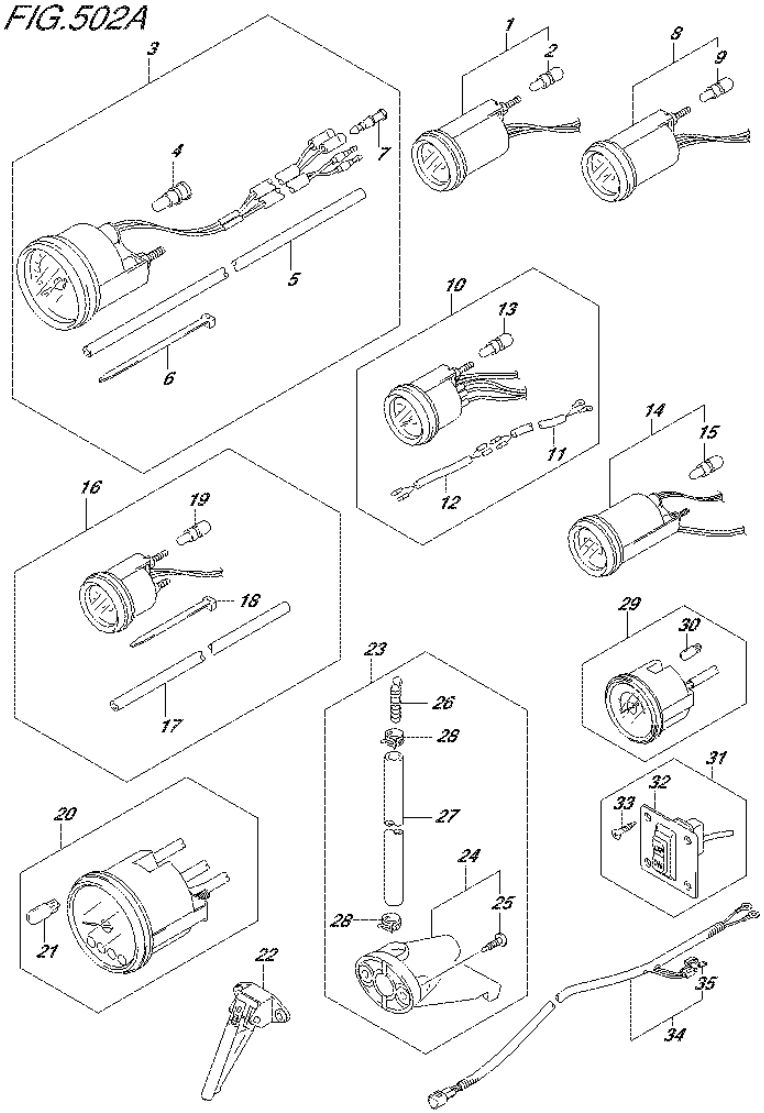

FIG.502A (2-J-11) OPT:METER (1) (DF70A E01)

REF NO.	PART NO.	DESCRIPTION	Q'TY	REMARKS
22	34190-87D00	SENDER ASSY, SPEEDOMETER	1	
23	34120-98J01	KIT, SPEEDOMETER SUB	1	
24	34190-95500	.SENDER ASSY, SPEEDOMETER	1	
25	03112-06303	..SCREW	2	
26	55127-87D00	.UNION, SPEEDOMETER HOSE	1	
27	09355-40805-00B	.HOSE (4X8X2000)	1	L:2000->1700
28	09407-10404	.CLAMP (L:100)	2	
29-1	34200-93J40	TACHOMETER ASSY, WITH MONITOR	1	BLACK
29-2	34200-93J51	TACHOMETER ASSY, WITH MONITOR	1	WHITE
30	09471-12077	.BULB (12V,1.7W)	1	
31	37860-87L00	PANEL ASSY, TROLLING CONTROL	1	
32	37862-87L00	.PANEL	1	
33	09131-05004	.SCREW (5X16)	4	
34	36663-98J00	WIRE, GAUGE POWER (2.5M)	1	
35	09481-05501	.FUSE (5A)	1	

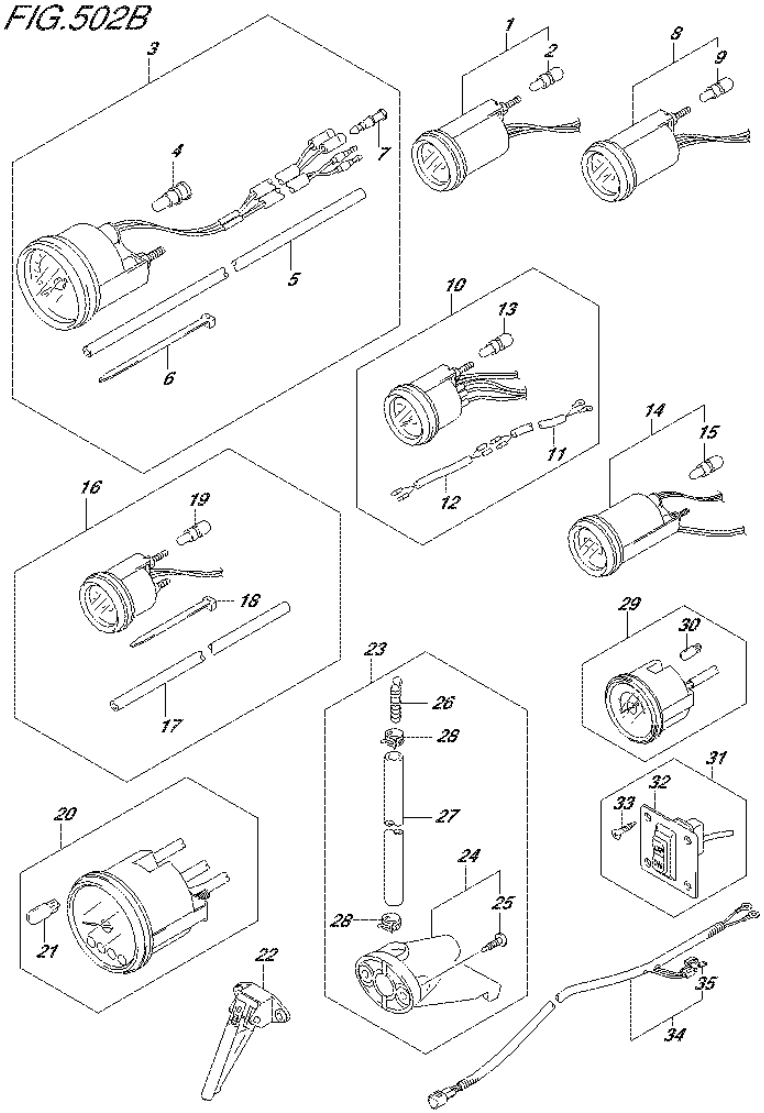

FIG.502B (2-J-12) OPT:METER (1) (DF70A E40)

REF NO.	PART NO.	DESCRIPTION	Q'TY	REMARKS
1-1	34800-93J00	METER ASSY, TRIM	1	BLACK
1-2	34800-93J11	METER ASSY, TRIM	1	WHITE
2	09471-12103	.BULB (12V,3W,T6.5)	1	
3-1	34100-93J00	SPEEDOMETER ASSY	1	MAX 130KM/H BLACK
3-2	34100-93J11	SPEEDOMETER ASSY	1	MAX 130KM/H WHITE
3-3	34100-93J20	SPEEDOMETER ASSY	1	MAX 80KM/H BLACK
3-4	34100-93J31	SPEEDOMETER ASSY	1	MAX 80KM/H WHITE
3-5	34100-93J40	SPEEDOMETER ASSY	1	MAX 45KNOTS BLACK
3-6	34100-93J51	SPEEDOMETER ASSY	1	MAX 45KNOTS WHITE
3-7	34100-93J60	SPEEDOMETER ASSY	1	MAX 65KNOTS WHITE
4	09471-12028	.BULB (12V,3.4W)	1	
5	34191-92E00	.TUBE	1	
6	09407-14407	.CLAMP (L:145)	2	
7	36615-96300	.TERMINAL, RESIN	2	
8-1	34600-93J00	METER ASSY, VOLTAGE	1	BLACK
8-2	34600-93J11	METER ASSY, VOLTAGE	1	WHITE
9	09471-12103	.BULB (12V,3W,T6.5)	1	
10-1	34300-93J00	GAUGE ASSY, FUEL	1	BLACK
10-2	34300-93J11	GAUGE ASSY, FUEL	1	WHITE
11	34310-92E00	.LEAD, FUEL GAUGE	1	
12	34360-92E00	.ADAPTER, FUEL GAUGE	1	
13	09471-12103	.BULB (12V,3W,T6.5)	1	
14-1	34500-93J00	METER ASSY, HOUR	1	BLACK
14-2	34500-93J11	METER ASSY, HOUR	1	WHITE
15	09471-12103	.BULB (12V,3W,T6.5)	1	
16-1	34650-93J20	GAUGE ASSY, WATER PRESSURE	1	15PSI BLACK
16-2	34650-93J31	GAUGE ASSY, WATER PRESSURE	1	15PSI WHITE
17	34191-92E00	.TUBE	1	
18	09407-14407	.CLAMP (L:145)	2	
19	09471-12103	.BULB (12V,3W,T6.5)	1	
20-1	34200-93J00	TACHOMETER ASSY, WITH MONITOR	1	BLACK
20-2	34200-93J12	TACHOMETER ASSY, WITH MONITOR	1	WHITE
21	09471-12077	.BULB (12V,1.7W)	1	

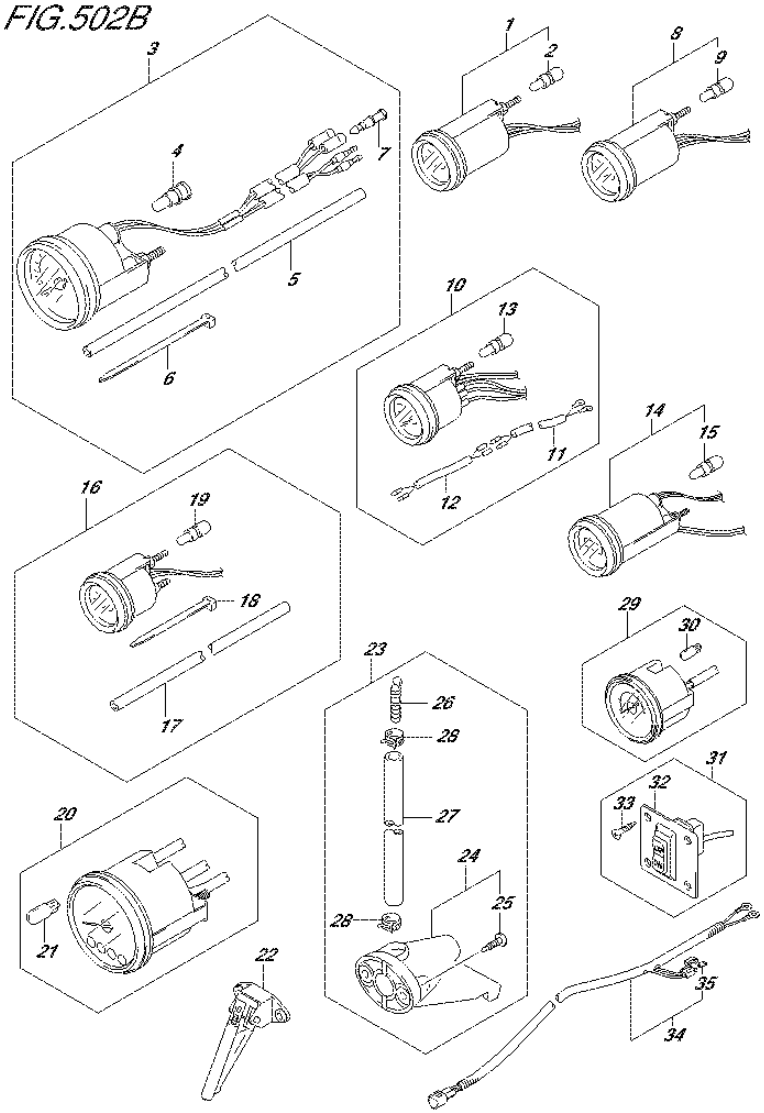

FIG.502B (2-J-13) OPT:METER (1) (DF70A E40)

REF NO.	PART NO.	DESCRIPTION	Q'TY	REMARKS
22	34190-87D00	SENDER ASSY, SPEEDOMETER	1	
23	34120-98J01	KIT, SPEEDOMETER SUB	1	
24	34190-95500	.SENDER ASSY, SPEEDOMETER	1	
25	03112-06303	..SCREW	2	
26	55127-87D00	.UNION, SPEEDOMETER HOSE	1	
27	09355-40805-00B	.HOSE (4X8X2000)	1	L:2000->1700
28	09407-10404	.CLAMP (L:100)	2	
29-1	34200-93J40	TACHOMETER ASSY, WITH MONITOR	1	BLACK
29-2	34200-93J51	TACHOMETER ASSY, WITH MONITOR	1	WHITE
30	09471-12077	.BULB (12V,1.7W)	1	
31	37860-87L00	PANEL ASSY, TROLLING CONTROL	1	
32	37862-87L00	.PANEL	1	
33	09131-05004	.SCREW (5X16)	4	
34	36663-98J00	WIRE, GAUGE POWER (2.5M)	1	
35	09481-05501	.FUSE (5A)	1	

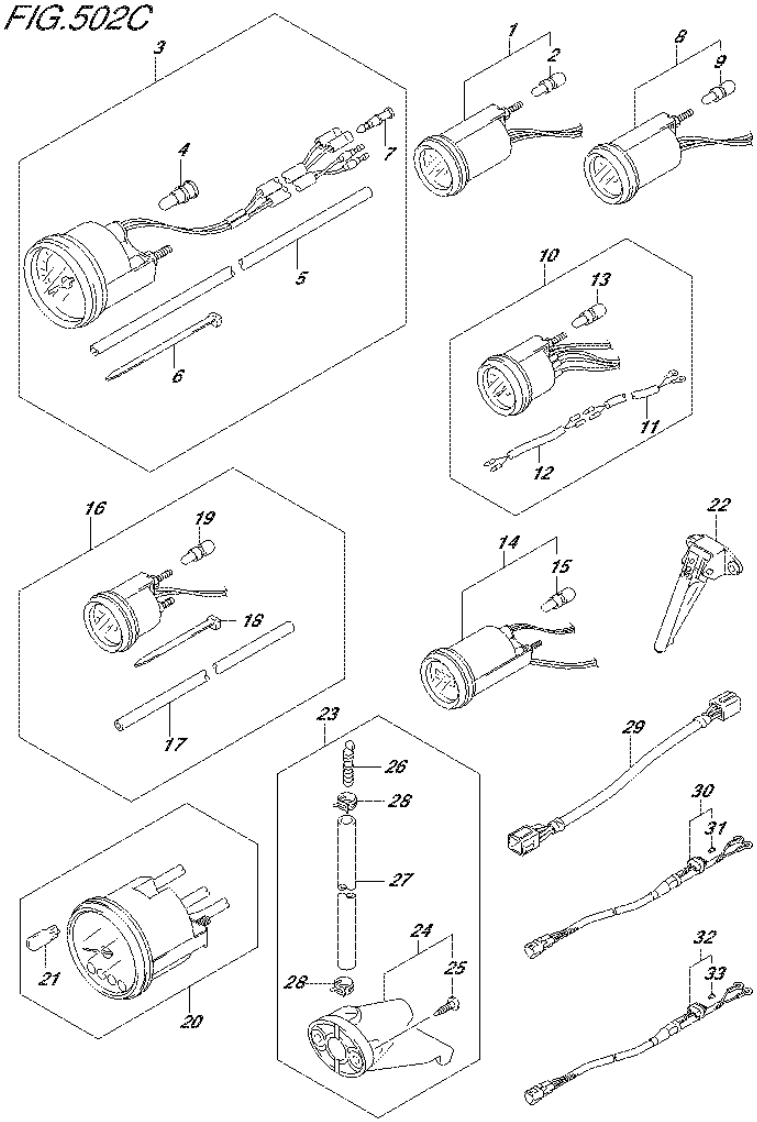

FIG.502C (2-J-14) OPT:METER (1) (DF70ATH E01)

REF NO.	PART NO.	DESCRIPTION	Q'TY	REMARKS
1-1	34800-93J00	METER ASSY, TRIM	1	BLACK
1-2	34800-93J11	METER ASSY, TRIM	1	WHITE
2	09471-12103	.BULB (12V,3W,T6.5)	1	
3-1	34100-93J00	SPEEDOMETER ASSY	1	MAX 130KM/H BLACK
3-2	34100-93J11	SPEEDOMETER ASSY	1	MAX 130KM/H WHITE
3-3	34100-93J20	SPEEDOMETER ASSY	1	MAX 80KM/H BLACK
3-4	34100-93J31	SPEEDOMETER ASSY	1	MAX 80KM/H WHITE
3-5	34100-93J40	SPEEDOMETER ASSY	1	MAX 45KNOTS BLACK
3-6	34100-93J51	SPEEDOMETER ASSY	1	MAX 45KNOTS WHITE
3-7	34100-93J60	SPEEDOMETER ASSY	1	MAX 65KNOTS WHITE
4	09471-12028	.BULB (12V,3.4W)	1	
5	34191-92E00	.TUBE	1	
6	09407-14407	.CLAMP (L:145)	2	
7	36615-96300	.TERMINAL, RESIN	2	
8-1	34600-93J00	METER ASSY, VOLTAGE	1	BLACK
8-2	34600-93J11	METER ASSY, VOLTAGE	1	WHITE
9	09471-12103	.BULB (12V,3W,T6.5)	1	
10-1	34300-93J00	GAUGE ASSY, FUEL	1	BLACK
10-2	34300-93J11	GAUGE ASSY, FUEL	1	WHITE
11	34310-92E00	.LEAD, FUEL GAUGE	1	
12	34360-92E00	.ADAPTER, FUEL GAUGE	1	
13	09471-12103	.BULB (12V,3W,T6.5)	1	
14-1	34500-93J00	METER ASSY, HOUR	1	BLACK
14-2	34500-93J11	METER ASSY, HOUR	1	WHITE
15	09471-12103	.BULB (12V,3W,T6.5)	1	
16-1	34650-93J20	GAUGE ASSY, WATER PRESSURE	1	15PSI BLACK
16-2	34650-93J31	GAUGE ASSY, WATER PRESSURE	1	15PSI WHITE
17	34191-92E00	.TUBE	1	
18	09407-14407	.CLAMP (L:145)	2	
19	09471-12103	.BULB (12V,3W,T6.5)	1	
20-1	34200-93J00	TACHOMETER ASSY, WITH MONITOR	1	BLACK
20-2	34200-93J12	TACHOMETER ASSY, WITH MONITOR	1	WHITE
21	09471-12077	.BULB (12V,1.7W)	1	

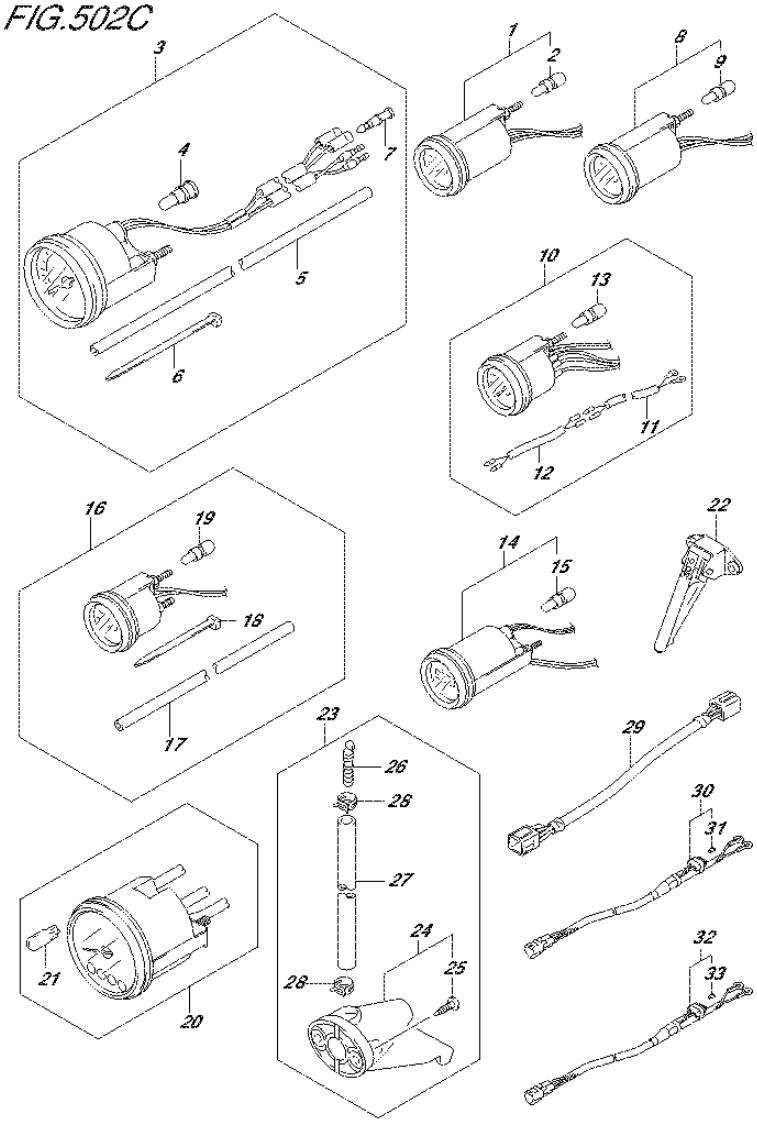

FIG.502C (2-J-15) OPT:METER (1) (DF70ATH E01)

REF NO.	PART NO.	DESCRIPTION	Q'TY	REMARKS
22	34190-87D00	SENDER ASSY, SPEEDOMETER	1	
23	34120-98J01	KIT, SPEEDOMETER SUB	1	
24	34190-95500	.SENDER ASSY, SPEEDOMETER	1	
25	03112-06303	..SCREW	2	
26	55127-87D00	.UNION, SPEEDOMETER HOSE	1	
27	09355-40805-00B	.HOSE (4X8X2000)	1	L:2000->1700
28	09407-10404	.CLAMP (L:100)	2	
29	36682-92E00	WIRE, TRIM METER	1	
30	36663-98J00	WIRE, GAUGE POWER (2.5M)	1	
31	09481-05501	.FUSE (5A)	1	
32	36663-98J10	HARNESS, ACTIVE HUB PWR (6M)	1	
33	09481-05501	.FUSE (5A)	1	

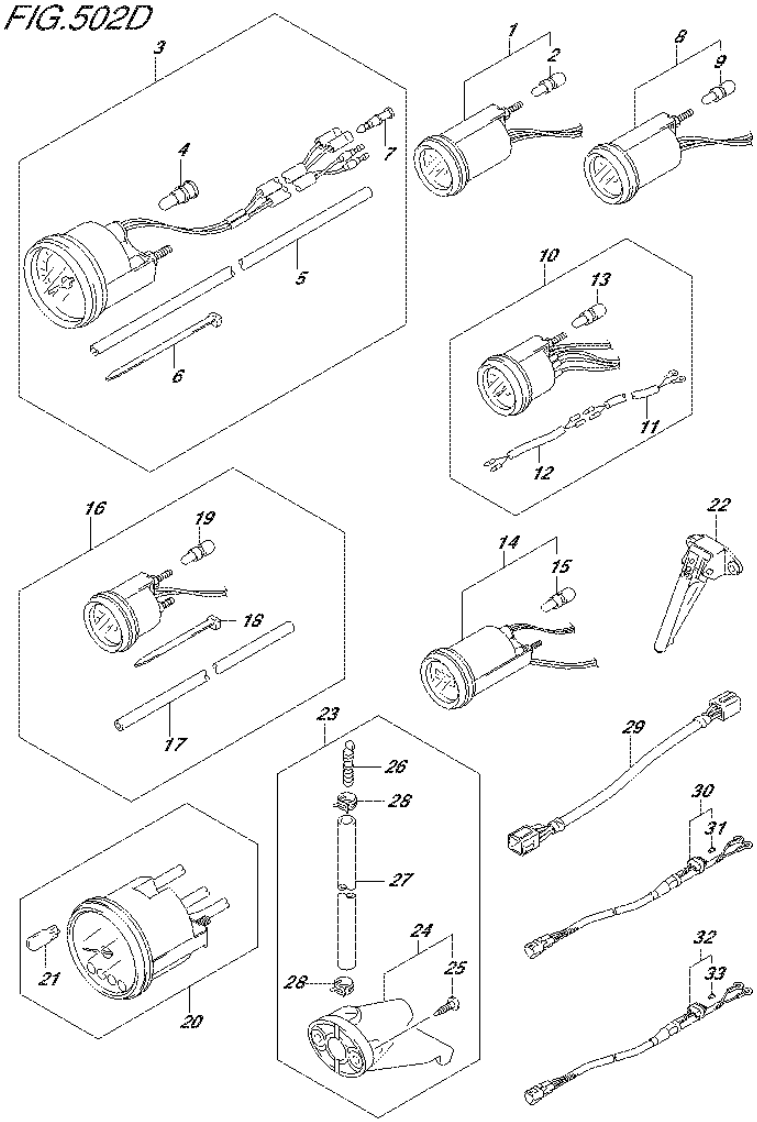

FIG.502D (2-K-2) OPT:METER (1) (DF70ATH E40)

REF NO.	PART NO.	DESCRIPTION	Q'TY	REMARKS
1-1	34800-93J00	METER ASSY, TRIM	1	BLACK
1-2	34800-93J11	METER ASSY, TRIM	1	WHITE
2	09471-12103	.BULB (12V,3W,T6.5)	1	
3-1	34100-93J00	SPEEDOMETER ASSY	1	MAX 130KM/H BLACK
3-2	34100-93J11	SPEEDOMETER ASSY	1	MAX 130KM/H WHITE
3-3	34100-93J20	SPEEDOMETER ASSY	1	MAX 80KM/H BLACK
3-4	34100-93J31	SPEEDOMETER ASSY	1	MAX 80KM/H WHITE
3-5	34100-93J40	SPEEDOMETER ASSY	1	MAX 45KNOTS BLACK
3-6	34100-93J51	SPEEDOMETER ASSY	1	MAX 45KNOTS WHITE
3-7	34100-93J60	SPEEDOMETER ASSY	1	MAX 65KNOTS WHITE
4	09471-12028	.BULB (12V,3.4W)	1	
5	34191-92E00	.TUBE	1	
6	09407-14407	.CLAMP (L:145)	2	
7	36615-96300	.TERMINAL, RESIN	2	
8-1	34600-93J00	METER ASSY, VOLTAGE	1	BLACK
8-2	34600-93J11	METER ASSY, VOLTAGE	1	WHITE
9	09471-12103	.BULB (12V,3W,T6.5)	1	
10-1	34300-93J00	GAUGE ASSY, FUEL	1	BLACK
10-2	34300-93J11	GAUGE ASSY, FUEL	1	WHITE
11	34310-92E00	.LEAD, FUEL GAUGE	1	
12	34360-92E00	.ADAPTER, FUEL GAUGE	1	
13	09471-12103	.BULB (12V,3W,T6.5)	1	
14-1	34500-93J00	METER ASSY, HOUR	1	BLACK
14-2	34500-93J11	METER ASSY, HOUR	1	WHITE
15	09471-12103	.BULB (12V,3W,T6.5)	1	
16-1	34650-93J20	GAUGE ASSY, WATER PRESSURE	1	15PSI BLACK
16-2	34650-93J31	GAUGE ASSY, WATER PRESSURE	1	15PSI WHITE
17	34191-92E00	.TUBE	1	
18	09407-14407	.CLAMP (L:145)	2	
19	09471-12103	.BULB (12V,3W,T6.5)	1	
20-1	34200-93J00	TACHOMETER ASSY, WITH MONITOR	1	BLACK
20-2	34200-93J12	TACHOMETER ASSY, WITH MONITOR	1	WHITE
21	09471-12077	.BULB (12V,1.7W)	1	

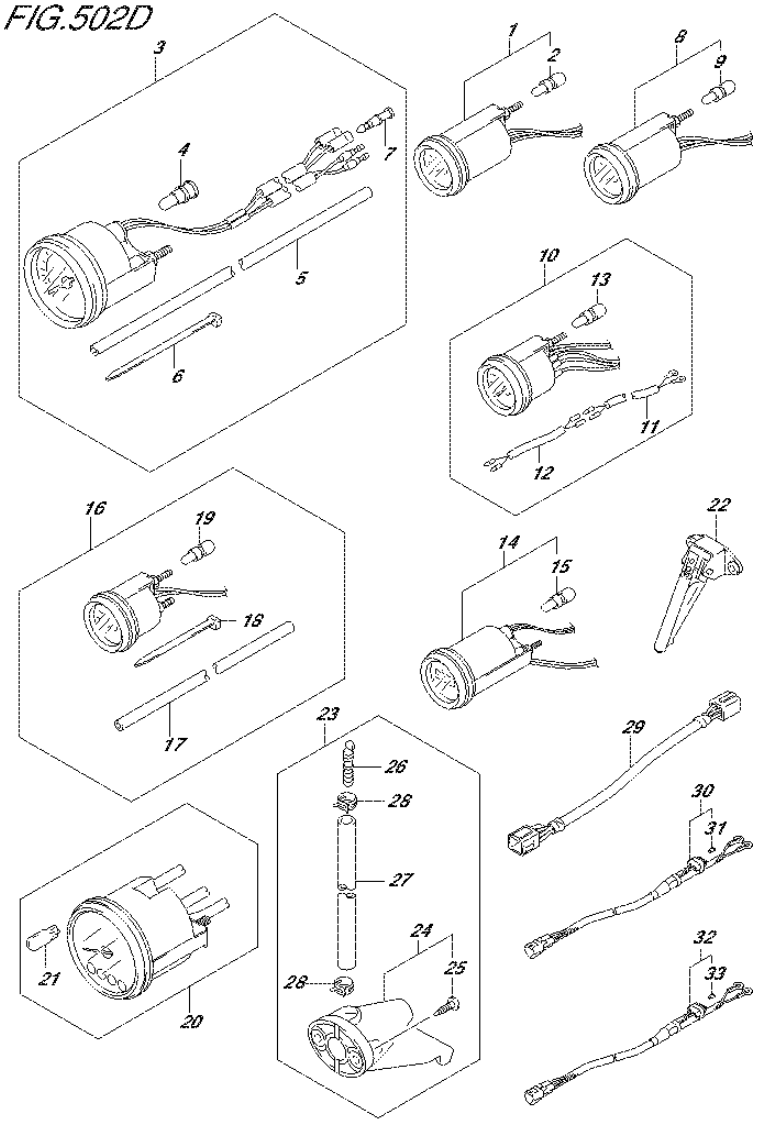

FIG.502D (2-K-3) OPT:METER (1) (DF70ATH E40)

REF NO.	PART NO.	DESCRIPTION	Q'TY	REMARKS
22	34190-87D00	SENDER ASSY, SPEEDOMETER	1	
23	34120-98J01	KIT, SPEEDOMETER SUB	1	
24	34190-95500	.SENDER ASSY, SPEEDOMETER	1	
25	03112-06303	..SCREW	2	
26	55127-87D00	.UNION, SPEEDOMETER HOSE	1	
27	09355-40805-00B	.HOSE (4X8X2000)	1	L:2000->1700
28	09407-10404	.CLAMP (L:100)	2	
29	36682-92E00	WIRE, TRIM METER	1	
30	36663-98J00	WIRE, GAUGE POWER (2.5M)	1	
31	09481-05501	.FUSE (5A)	1	
32	36663-98J10	HARNESS, ACTIVE HUB PWR (6M)	1	
33	09481-05501	.FUSE (5A)	1	

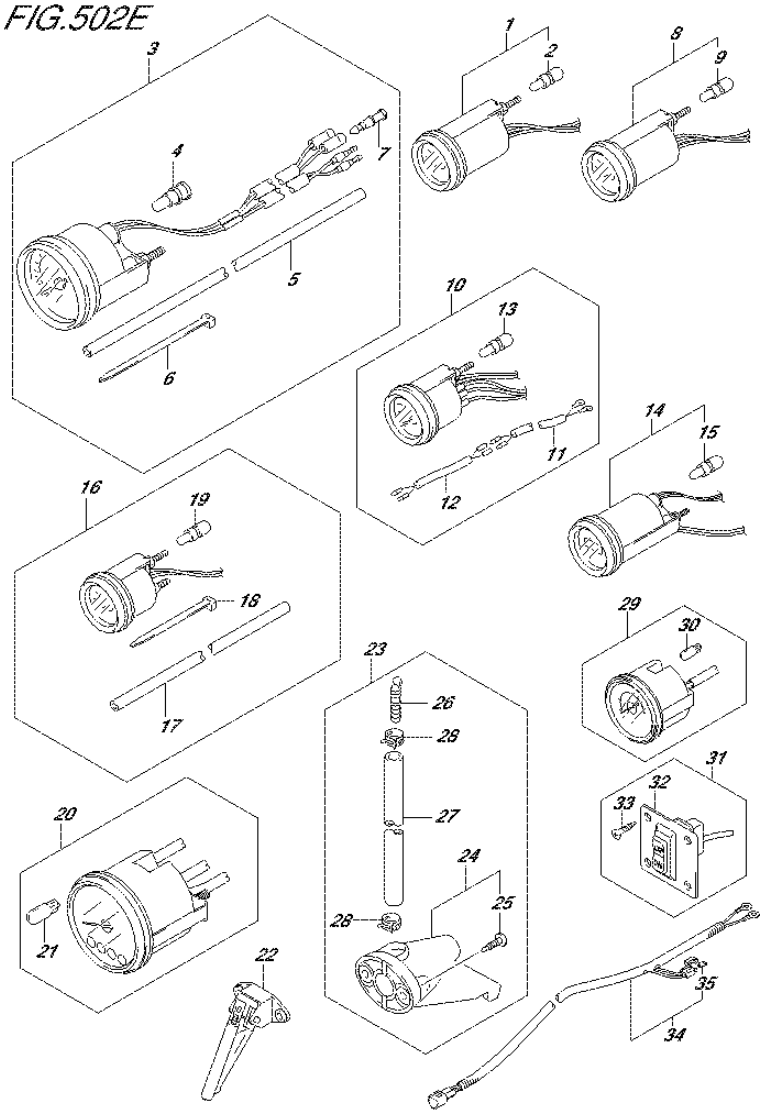

FIG.502E (2-K-4) OPT:METER (1) (DF80A E01)

REF NO.	PART NO.	DESCRIPTION	Q'TY	REMARKS
1-1	34800-93J00	METER ASSY, TRIM	1	BLACK
1-2	34800-93J11	METER ASSY, TRIM	1	WHITE
2	09471-12103	.BULB (12V,3W,T6.5)	1	
3-1	34100-93J00	SPEEDOMETER ASSY	1	MAX 130KM/H BLACK
3-2	34100-93J11	SPEEDOMETER ASSY	1	MAX 130KM/H WHITE
3-3	34100-93J20	SPEEDOMETER ASSY	1	MAX 80KM/H BLACK
3-4	34100-93J31	SPEEDOMETER ASSY	1	MAX 80KM/H WHITE
3-5	34100-93J40	SPEEDOMETER ASSY	1	MAX 45KNOTS BLACK
3-6	34100-93J51	SPEEDOMETER ASSY	1	MAX 45KNOTS WHITE
3-7	34100-93J60	SPEEDOMETER ASSY	1	MAX 65KNOTS WHITE
4	09471-12028	.BULB (12V,3.4W)	1	
5	34191-92E00	.TUBE	1	
6	09407-14407	.CLAMP (L:145)	2	
7	36615-96300	.TERMINAL, RESIN	2	
8-1	34600-93J00	METER ASSY, VOLTAGE	1	BLACK
8-2	34600-93J11	METER ASSY, VOLTAGE	1	WHITE
9	09471-12103	.BULB (12V,3W,T6.5)	1	
10-1	34300-93J00	GAUGE ASSY, FUEL	1	BLACK
10-2	34300-93J11	GAUGE ASSY, FUEL	1	WHITE
11	34310-92E00	.LEAD, FUEL GAUGE	1	
12	34360-92E00	.ADAPTER, FUEL GAUGE	1	
13	09471-12103	.BULB (12V,3W,T6.5)	1	
14-1	34500-93J00	METER ASSY, HOUR	1	BLACK
14-2	34500-93J11	METER ASSY, HOUR	1	WHITE
15	09471-12103	.BULB (12V,3W,T6.5)	1	
16-1	34650-93J20	GAUGE ASSY, WATER PRESSURE	1	15PSI BLACK
16-2	34650-93J31	GAUGE ASSY, WATER PRESSURE	1	15PSI WHITE
17	34191-92E00	.TUBE	1	
18	09407-14407	.CLAMP (L:145)	2	
19	09471-12103	.BULB (12V,3W,T6.5)	1	
20-1	34200-93J00	TACHOMETER ASSY, WITH MONITOR	1	BLACK
20-2	34200-93J12	TACHOMETER ASSY, WITH MONITOR	1	WHITE
21	09471-12077	.BULB (12V,1.7W)	1	

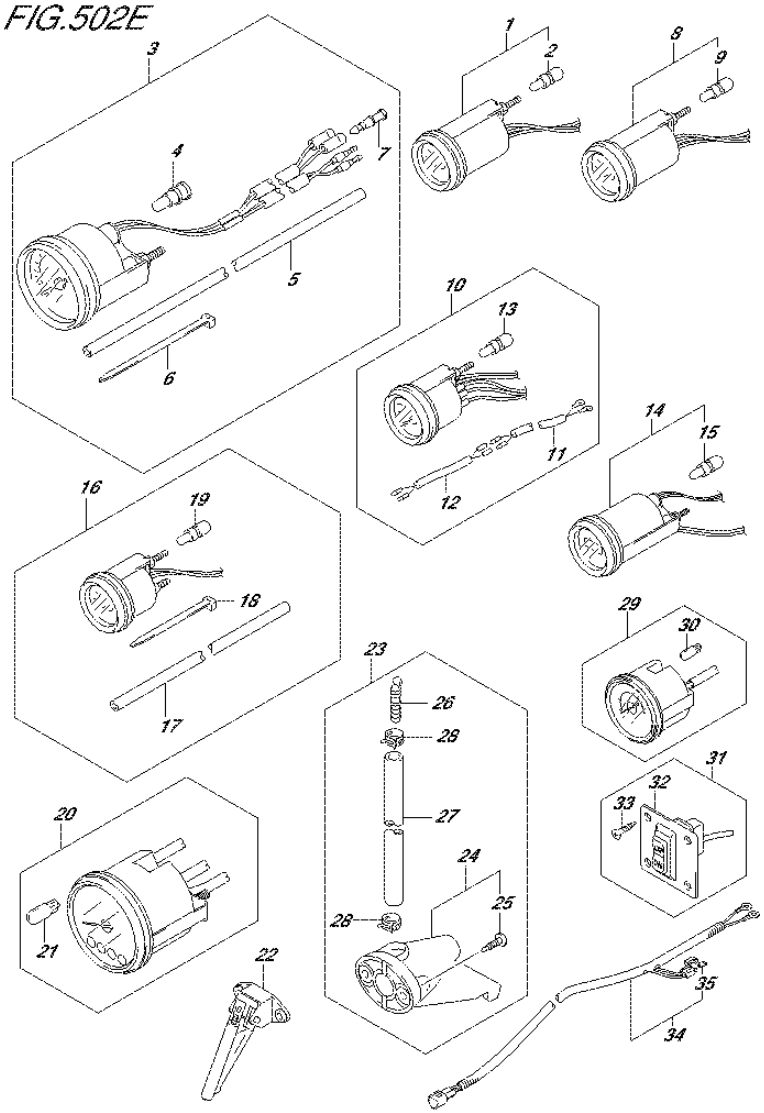

FIG.502E (2-K-5) OPT:METER (1) (DF80A E01)

REF NO.	PART NO.	DESCRIPTION	Q'TY	REMARKS
22	34190-87D00	SENDER ASSY, SPEEDOMETER	1	
23	34120-98J01	KIT, SPEEDOMETER SUB	1	
24	34190-95500	.SENDER ASSY, SPEEDOMETER	1	
25	03112-06303	..SCREW	2	
26	55127-87D00	.UNION, SPEEDOMETER HOSE	1	
27	09355-40805-00B	.HOSE (4X8X2000)	1	L:2000->1700
28	09407-10404	.CLAMP (L:100)	2	
29-1	34200-93J40	TACHOMETER ASSY, WITH MONITOR	1	BLACK
29-2	34200-93J51	TACHOMETER ASSY, WITH MONITOR	1	WHITE
30	09471-12077	.BULB (12V,1.7W)	1	
31	37860-87L00	PANEL ASSY, TROLLING CONTROL	1	
32	37862-87L00	.PANEL	1	
33	09131-05004	.SCREW (5X16)	4	
34	36663-98J00	WIRE, GAUGE POWER (2.5M)	1	
35	09481-05501	.FUSE (5A)	1	

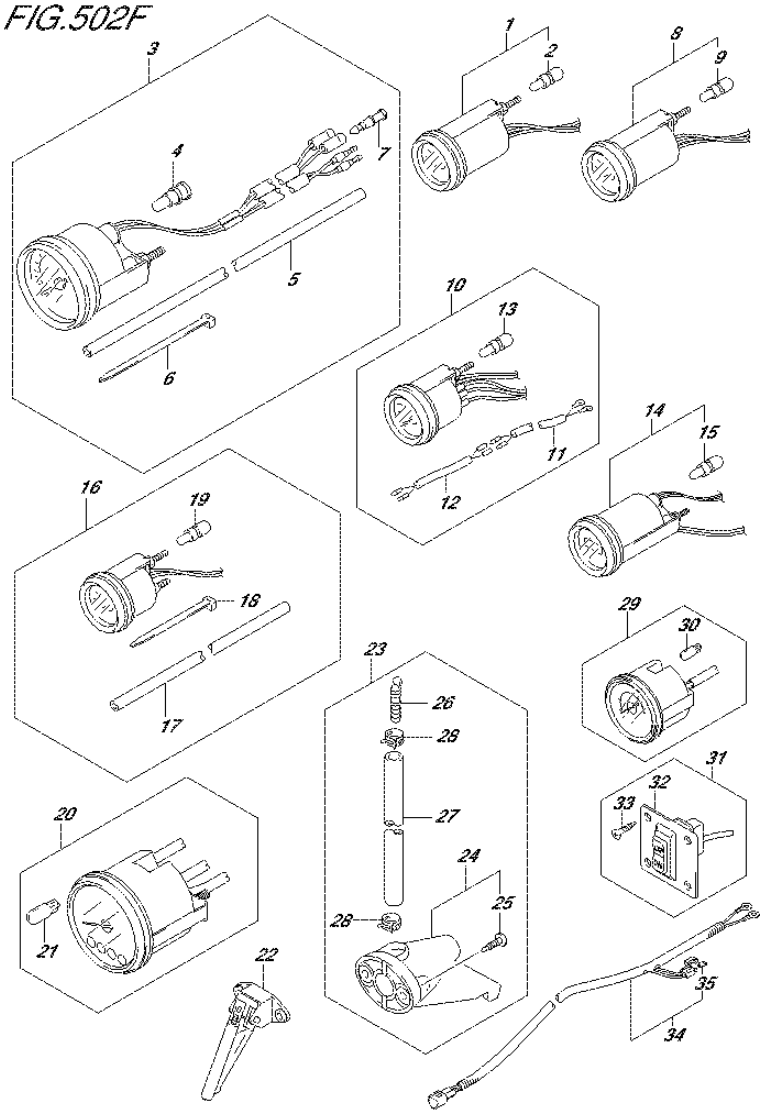

FIG.502F (2-K-6) OPT:METER (1) (DF80A E40)

REF NO.	PART NO.	DESCRIPTION	Q'TY	REMARKS
1-1	34800-93J00	METER ASSY, TRIM	1	BLACK
1-2	34800-93J11	METER ASSY, TRIM	1	WHITE
2	09471-12103	.BULB (12V,3W,T6.5)	1	
3-1	34100-93J00	SPEEDOMETER ASSY	1	MAX 130KM/H BLACK
3-2	34100-93J11	SPEEDOMETER ASSY	1	MAX 130KM/H WHITE
3-3	34100-93J20	SPEEDOMETER ASSY	1	MAX 80KM/H BLACK
3-4	34100-93J31	SPEEDOMETER ASSY	1	MAX 80KM/H WHITE
3-5	34100-93J40	SPEEDOMETER ASSY	1	MAX 45KNOTS BLACK
3-6	34100-93J51	SPEEDOMETER ASSY	1	MAX 45KNOTS WHITE
3-7	34100-93J60	SPEEDOMETER ASSY	1	MAX 65KNOTS WHITE
4	09471-12028	.BULB (12V,3.4W)	1	
5	34191-92E00	.TUBE	1	
6	09407-14407	.CLAMP (L:145)	2	
7	36615-96300	.TERMINAL, RESIN	2	
8-1	34600-93J00	METER ASSY, VOLTAGE	1	BLACK
8-2	34600-93J11	METER ASSY, VOLTAGE	1	WHITE
9	09471-12103	.BULB (12V,3W,T6.5)	1	
10-1	34300-93J00	GAUGE ASSY, FUEL	1	BLACK
10-2	34300-93J11	GAUGE ASSY, FUEL	1	WHITE
11	34310-92E00	.LEAD, FUEL GAUGE	1	
12	34360-92E00	.ADAPTER, FUEL GAUGE	1	
13	09471-12103	.BULB (12V,3W,T6.5)	1	
14-1	34500-93J00	METER ASSY, HOUR	1	BLACK
14-2	34500-93J11	METER ASSY, HOUR	1	WHITE
15	09471-12103	.BULB (12V,3W,T6.5)	1	
16-1	34650-93J20	GAUGE ASSY, WATER PRESSURE	1	15PSI BLACK
16-2	34650-93J31	GAUGE ASSY, WATER PRESSURE	1	15PSI WHITE
17	34191-92E00	.TUBE	1	
18	09407-14407	.CLAMP (L:145)	2	
19	09471-12103	.BULB (12V,3W,T6.5)	1	
20-1	34200-93J00	TACHOMETER ASSY, WITH MONITOR	1	BLACK
20-2	34200-93J12	TACHOMETER ASSY, WITH MONITOR	1	WHITE
21	09471-12077	.BULB (12V,1.7W)	1	

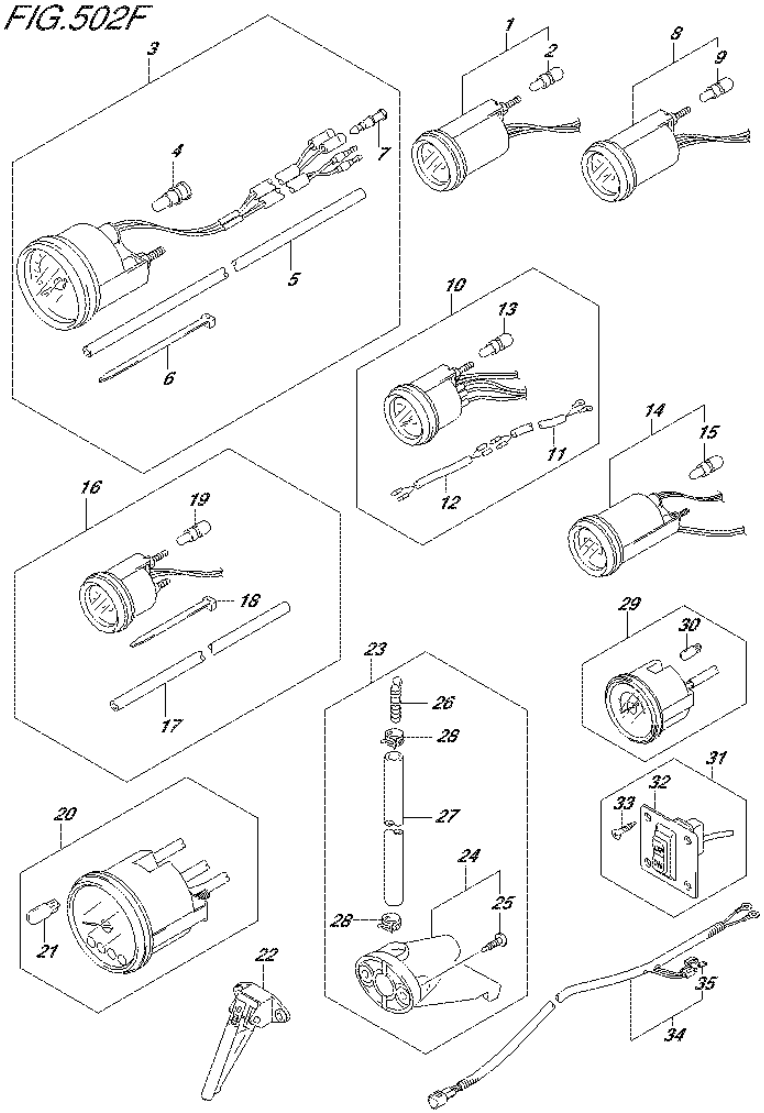

FIG.502F (2-K-7) OPT:METER (1) (DF80A E40)

REF NO.	PART NO.	DESCRIPTION	Q'TY	REMARKS
22	34190-87D00	SENDER ASSY, SPEEDOMETER	1	
23	34120-98J01	KIT, SPEEDOMETER SUB	1	
24	34190-95500	.SENDER ASSY, SPEEDOMETER	1	
25	03112-06303	..SCREW	2	
26	55127-87D00	.UNION, SPEEDOMETER HOSE	1	
27	09355-40805-00B	.HOSE (4X8X2000)	1	L:2000->1700
28	09407-10404	.CLAMP (L:100)	2	
29-1	34200-93J40	TACHOMETER ASSY, WITH MONITOR	1	BLACK
29-2	34200-93J51	TACHOMETER ASSY, WITH MONITOR	1	WHITE
30	09471-12077	.BULB (12V,1.7W)	1	
31	37860-87L00	PANEL ASSY, TROLLING CONTROL	1	
32	37862-87L00	.PANEL	1	
33	09131-05004	.SCREW (5X16)	4	
34	36663-98J00	WIRE, GAUGE POWER (2.5M)	1	
35	09481-05501	.FUSE (5A)	1	

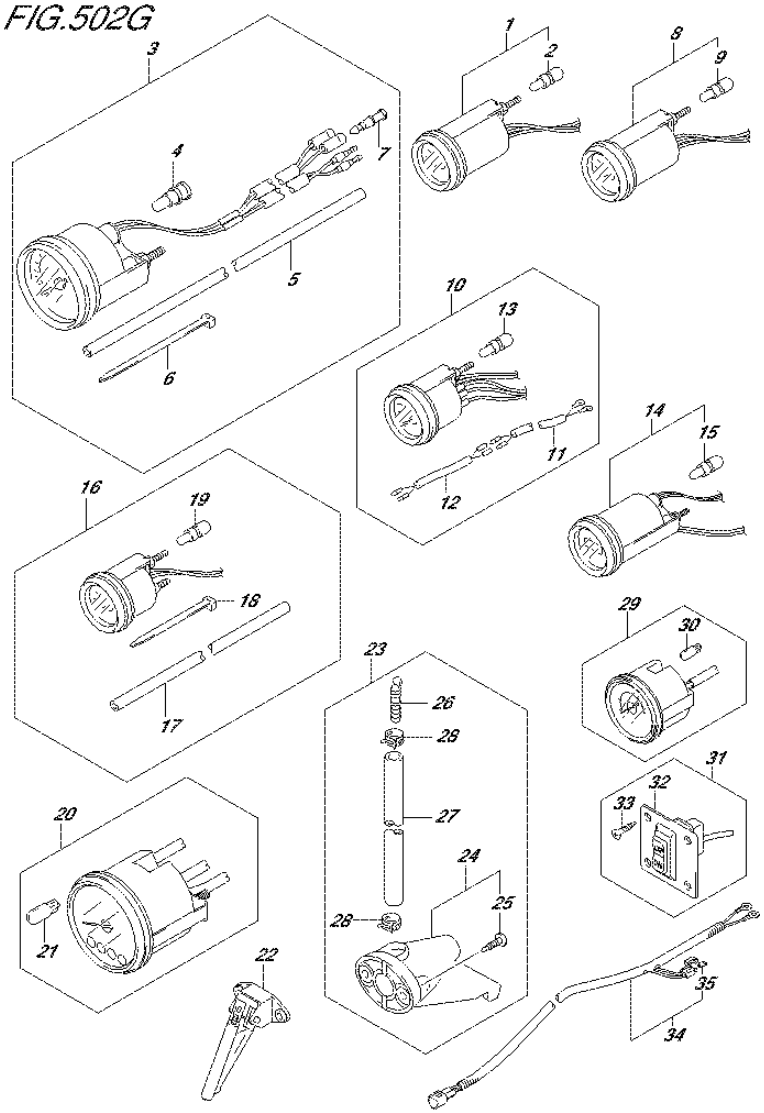

FIG.502G (2-K-8) OPT:METER (1) (DF90A E01)

REF NO.	PART NO.	DESCRIPTION	Q'TY	REMARKS
1-1	34800-93J00	METER ASSY, TRIM	1	BLACK
1-2	34800-93J11	METER ASSY, TRIM	1	WHITE
2	09471-12103	.BULB (12V,3W,T6.5)	1	
3-1	34100-93J00	SPEEDOMETER ASSY	1	MAX 130KM/H BLACK
3-2	34100-93J11	SPEEDOMETER ASSY	1	MAX 130KM/H WHITE
3-3	34100-93J20	SPEEDOMETER ASSY	1	MAX 80KM/H BLACK
3-4	34100-93J31	SPEEDOMETER ASSY	1	MAX 80KM/H WHITE
3-5	34100-93J40	SPEEDOMETER ASSY	1	MAX 45KNOTS BLACK
3-6	34100-93J51	SPEEDOMETER ASSY	1	MAX 45KNOTS WHITE
3-7	34100-93J60	SPEEDOMETER ASSY	1	MAX 65KNOTS WHITE
4	09471-12028	.BULB (12V,3.4W)	1	
5	34191-92E00	.TUBE	1	
6	09407-14407	.CLAMP (L:145)	2	
7	36615-96300	.TERMINAL, RESIN	2	
8-1	34600-93J00	METER ASSY, VOLTAGE	1	BLACK
8-2	34600-93J11	METER ASSY, VOLTAGE	1	WHITE
9	09471-12103	.BULB (12V,3W,T6.5)	1	
10-1	34300-93J00	GAUGE ASSY, FUEL	1	BLACK
10-2	34300-93J11	GAUGE ASSY, FUEL	1	WHITE
11	34310-92E00	.LEAD, FUEL GAUGE	1	
12	34360-92E00	.ADAPTER, FUEL GAUGE	1	
13	09471-12103	.BULB (12V,3W,T6.5)	1	
14-1	34500-93J00	METER ASSY, HOUR	1	BLACK
14-2	34500-93J11	METER ASSY, HOUR	1	WHITE
15	09471-12103	.BULB (12V,3W,T6.5)	1	
16-1	34650-93J20	GAUGE ASSY, WATER PRESSURE	1	15PSI BLACK
16-2	34650-93J31	GAUGE ASSY, WATER PRESSURE	1	15PSI WHITE
17	34191-92E00	.TUBE	1	
18	09407-14407	.CLAMP (L:145)	2	
19	09471-12103	.BULB (12V,3W,T6.5)	1	
20-1	34200-93J00	TACHOMETER ASSY, WITH MONITOR	1	BLACK
20-2	34200-93J12	TACHOMETER ASSY, WITH MONITOR	1	WHITE
21	09471-12077	.BULB (12V,1.7W)	1	

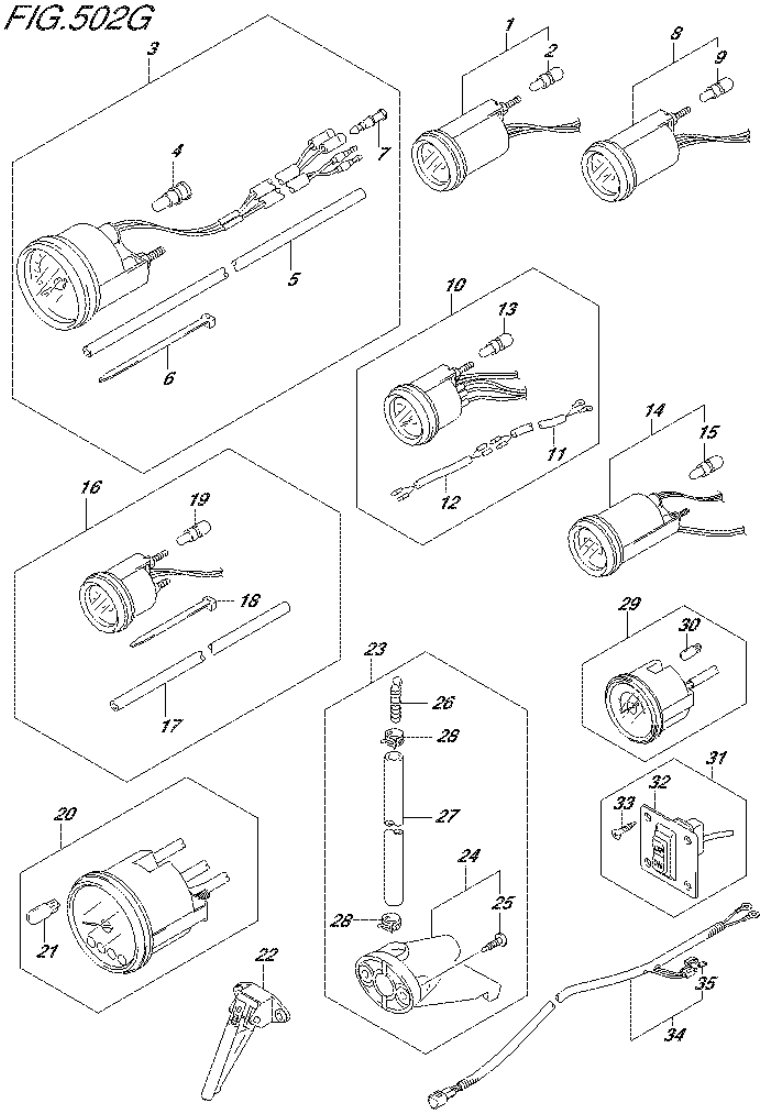

FIG.502G (2-K-9) OPT:METER (1) (DF90A E01)

REF NO.	PART NO.	DESCRIPTION	Q'TY	REMARKS
22	34190-87D00	SENDER ASSY, SPEEDOMETER	1	
23	34120-98J01	KIT, SPEEDOMETER SUB	1	
24	34190-95500	.SENDER ASSY, SPEEDOMETER	1	
25	03112-06303	..SCREW	2	
26	55127-87D00	.UNION, SPEEDOMETER HOSE	1	
27	09355-40805-00B	.HOSE (4X8X2000)	1	L:2000->1700
28	09407-10404	.CLAMP (L:100)	2	
29-1	34200-93J40	TACHOMETER ASSY, WITH MONITOR	1	BLACK
29-2	34200-93J51	TACHOMETER ASSY, WITH MONITOR	1	WHITE
30	09471-12077	.BULB (12V,1.7W)	1	
31	37860-87L00	PANEL ASSY, TROLLING CONTROL	1	
32	37862-87L00	.PANEL	1	
33	09131-05004	.SCREW (5X16)	4	
34	36663-98J00	WIRE, GAUGE POWER (2.5M)	1	
35	09481-05501	.FUSE (5A)	1	

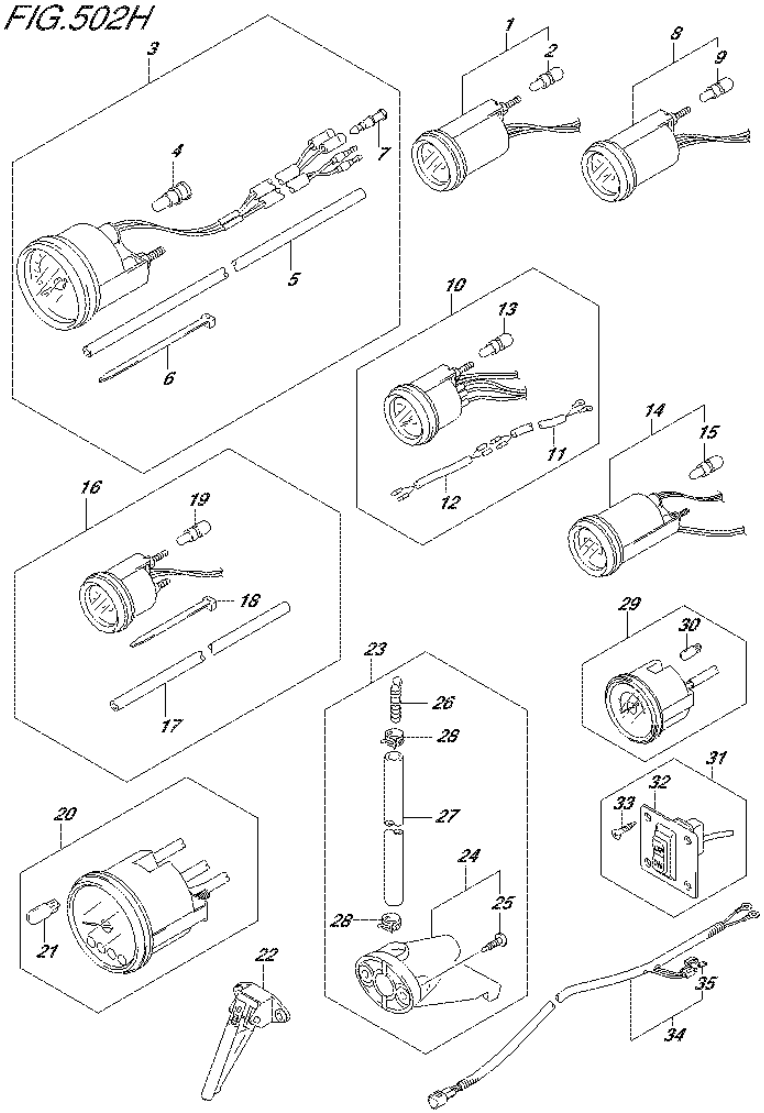

FIG.502H (2-K-10) OPT:METER (1) (DF90A E40)

REF NO.	PART NO.	DESCRIPTION	Q'TY	REMARKS
1-1	34800-93J00	METER ASSY, TRIM	1	BLACK
1-2	34800-93J11	METER ASSY, TRIM	1	WHITE
2	09471-12103	.BULB (12V,3W,T6.5)	1	
3-1	34100-93J00	SPEEDOMETER ASSY	1	MAX 130KM/H BLACK
3-2	34100-93J11	SPEEDOMETER ASSY	1	MAX 130KM/H WHITE
3-3	34100-93J20	SPEEDOMETER ASSY	1	MAX 80KM/H BLACK
3-4	34100-93J31	SPEEDOMETER ASSY	1	MAX 80KM/H WHITE
3-5	34100-93J40	SPEEDOMETER ASSY	1	MAX 45KNOTS BLACK
3-6	34100-93J51	SPEEDOMETER ASSY	1	MAX 45KNOTS WHITE
3-7	34100-93J60	SPEEDOMETER ASSY	1	MAX 65KNOTS WHITE
4	09471-12028	.BULB (12V,3.4W)	1	
5	34191-92E00	.TUBE	1	
6	09407-14407	.CLAMP (L:145)	2	
7	36615-96300	.TERMINAL, RESIN	2	
8-1	34600-93J00	METER ASSY, VOLTAGE	1	BLACK
8-2	34600-93J11	METER ASSY, VOLTAGE	1	WHITE
9	09471-12103	.BULB (12V,3W,T6.5)	1	
10-1	34300-93J00	GAUGE ASSY, FUEL	1	BLACK
10-2	34300-93J11	GAUGE ASSY, FUEL	1	WHITE
11	34310-92E00	.LEAD, FUEL GAUGE	1	
12	34360-92E00	.ADAPTER, FUEL GAUGE	1	
13	09471-12103	.BULB (12V,3W,T6.5)	1	
14-1	34500-93J00	METER ASSY, HOUR	1	BLACK
14-2	34500-93J11	METER ASSY, HOUR	1	WHITE
15	09471-12103	.BULB (12V,3W,T6.5)	1	
16-1	34650-93J20	GAUGE ASSY, WATER PRESSURE	1	15PSI BLACK
16-2	34650-93J31	GAUGE ASSY, WATER PRESSURE	1	15PSI WHITE
17	34191-92E00	.TUBE	1	
18	09407-14407	.CLAMP (L:145)	2	
19	09471-12103	.BULB (12V,3W,T6.5)	1	
20-1	34200-93J00	TACHOMETER ASSY, WITH MONITOR	1	BLACK
20-2	34200-93J12	TACHOMETER ASSY, WITH MONITOR	1	WHITE
21	09471-12077	.BULB (12V,1.7W)	1	

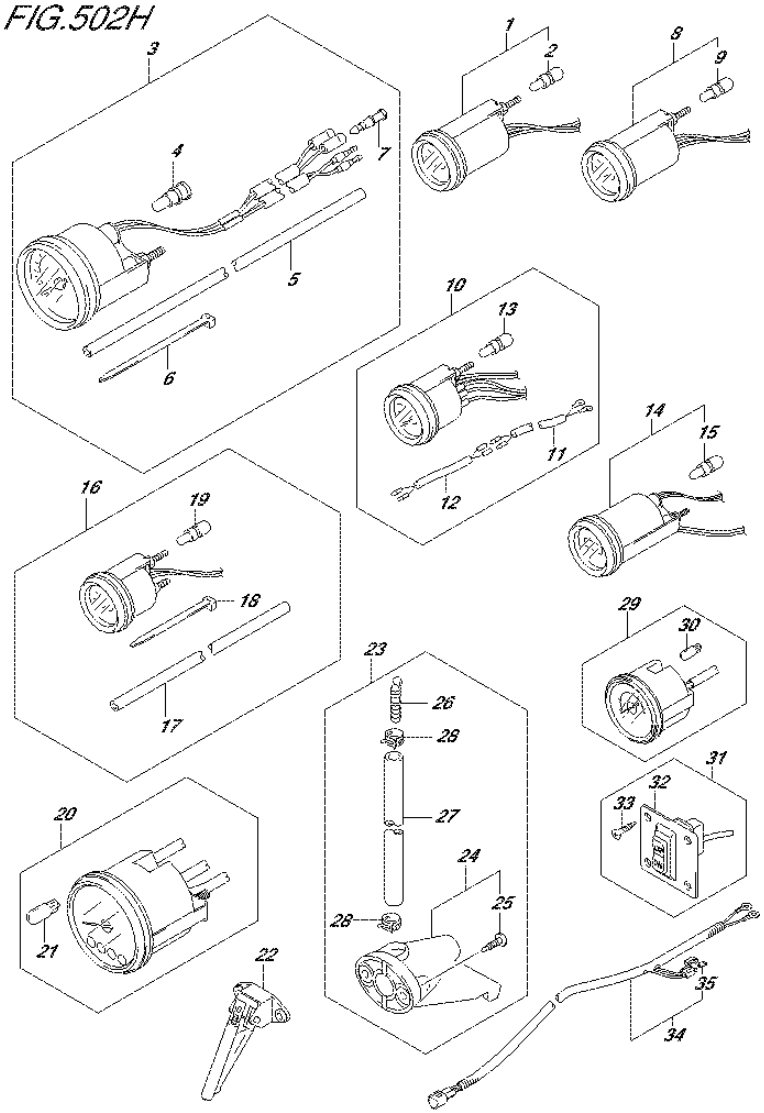

FIG.502H (2-K-11) OPT:METER (1) (DF90A E40)

REF NO.	PART NO.	DESCRIPTION	Q'TY	REMARKS
22	34190-87D00	SENDER ASSY, SPEEDOMETER	1	
23	34120-98J01	KIT, SPEEDOMETER SUB	1	
24	34190-95500	.SENDER ASSY, SPEEDOMETER	1	
25	03112-06303	..SCREW	2	
26	55127-87D00	.UNION, SPEEDOMETER HOSE	1	
27	09355-40805-00B	.HOSE (4X8X2000)	1	L:2000->1700
28	09407-10404	.CLAMP (L:100)	2	
29-1	34200-93J40	TACHOMETER ASSY, WITH MONITOR	1	BLACK
29-2	34200-93J51	TACHOMETER ASSY, WITH MONITOR	1	WHITE
30	09471-12077	.BULB (12V,1.7W)	1	
31	37860-87L00	PANEL ASSY, TROLLING CONTROL	1	
32	37862-87L00	.PANEL	1	
33	09131-05004	.SCREW (5X16)	4	
34	36663-98J00	WIRE, GAUGE POWER (2.5M)	1	
35	09481-05501	.FUSE (5A)	1	

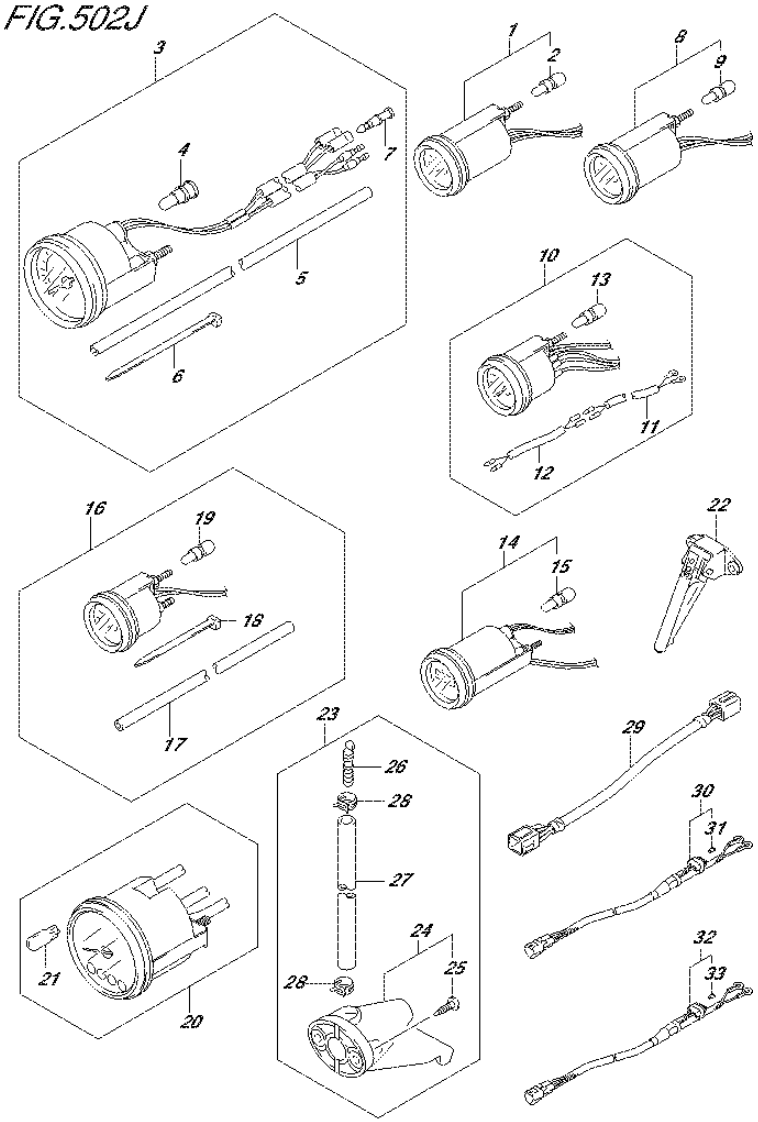

FIG.502J (2-K-12) OPT:METER (1) (DF90ATH E01)

REF NO.	PART NO.	DESCRIPTION	Q'TY	REMARKS
1-1	34800-93J00	METER ASSY, TRIM	1	BLACK
1-2	34800-93J11	METER ASSY, TRIM	1	WHITE
2	09471-12103	.BULB (12V,3W,T6.5)	1	
3-1	34100-93J00	SPEEDOMETER ASSY	1	MAX 130KM/H BLACK
3-2	34100-93J11	SPEEDOMETER ASSY	1	MAX 130KM/H WHITE
3-3	34100-93J20	SPEEDOMETER ASSY	1	MAX 80KM/H BLACK
3-4	34100-93J31	SPEEDOMETER ASSY	1	MAX 80KM/H WHITE
3-5	34100-93J40	SPEEDOMETER ASSY	1	MAX 45KNOTS BLACK
3-6	34100-93J51	SPEEDOMETER ASSY	1	MAX 45KNOTS WHITE
3-7	34100-93J60	SPEEDOMETER ASSY	1	MAX 65KNOTS WHITE
4	09471-12028	.BULB (12V,3.4W)	1	
5	34191-92E00	.TUBE	1	
6	09407-14407	.CLAMP (L:145)	2	
7	36615-96300	.TERMINAL, RESIN	2	
8-1	34600-93J00	METER ASSY, VOLTAGE	1	BLACK
8-2	34600-93J11	METER ASSY, VOLTAGE	1	WHITE
9	09471-12103	.BULB (12V,3W,T6.5)	1	
10-1	34300-93J00	GAUGE ASSY, FUEL	1	BLACK
10-2	34300-93J11	GAUGE ASSY, FUEL	1	WHITE
11	34310-92E00	.LEAD, FUEL GAUGE	1	
12	34360-92E00	.ADAPTER, FUEL GAUGE	1	
13	09471-12103	.BULB (12V,3W,T6.5)	1	
14-1	34500-93J00	METER ASSY, HOUR	1	BLACK
14-2	34500-93J11	METER ASSY, HOUR	1	WHITE
15	09471-12103	.BULB (12V,3W,T6.5)	1	
16-1	34650-93J20	GAUGE ASSY, WATER PRESSURE	1	15PSI BLACK
16-2	34650-93J31	GAUGE ASSY, WATER PRESSURE	1	15PSI WHITE
17	34191-92E00	.TUBE	1	
18	09407-14407	.CLAMP (L:145)	2	
19	09471-12103	.BULB (12V,3W,T6.5)	1	
20-1	34200-93J00	TACHOMETER ASSY, WITH MONITOR	1	BLACK
20-2	34200-93J12	TACHOMETER ASSY, WITH MONITOR	1	WHITE
21	09471-12077	.BULB (12V,1.7W)	1	

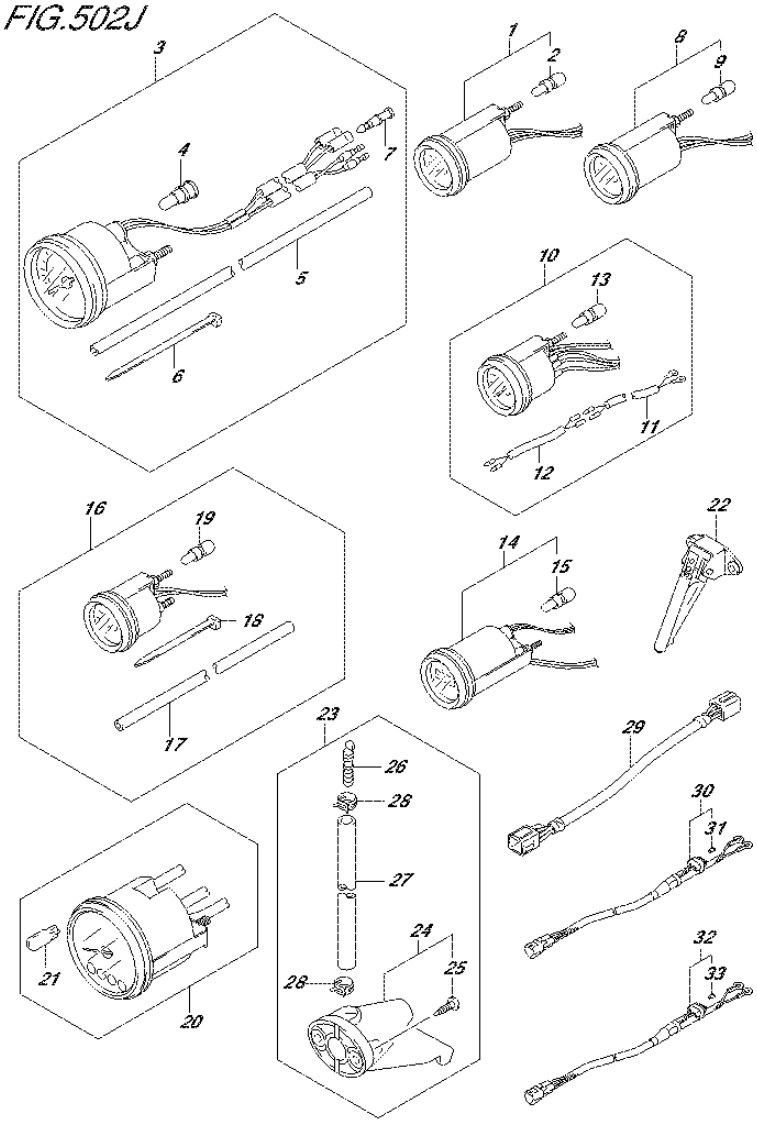

FIG.502J (2-K-13) OPT:METER (1) (DF90ATH E01)

REF NO.	PART NO.	DESCRIPTION	Q'TY	REMARKS
22	34190-87D00	SENDER ASSY, SPEEDOMETER	1	
23	34120-98J01	KIT, SPEEDOMETER SUB	1	
24	34190-95500	.SENDER ASSY, SPEEDOMETER	1	
25	03112-06303	..SCREW	2	
26	55127-87D00	.UNION, SPEEDOMETER HOSE	1	
27	09355-40805-00B	.HOSE (4X8X2000)	1	L:2000->1700
28	09407-10404	.CLAMP (L:100)	2	
29	36682-92E00	WIRE, TRIM METER	1	
30	36663-98J00	WIRE, GAUGE POWER (2.5M)	1	
31	09481-05501	.FUSE (5A)	1	
32	36663-98J10	HARNESS, ACTIVE HUB PWR (6M)	1	
33	09481-05501	.FUSE (5A)	1	

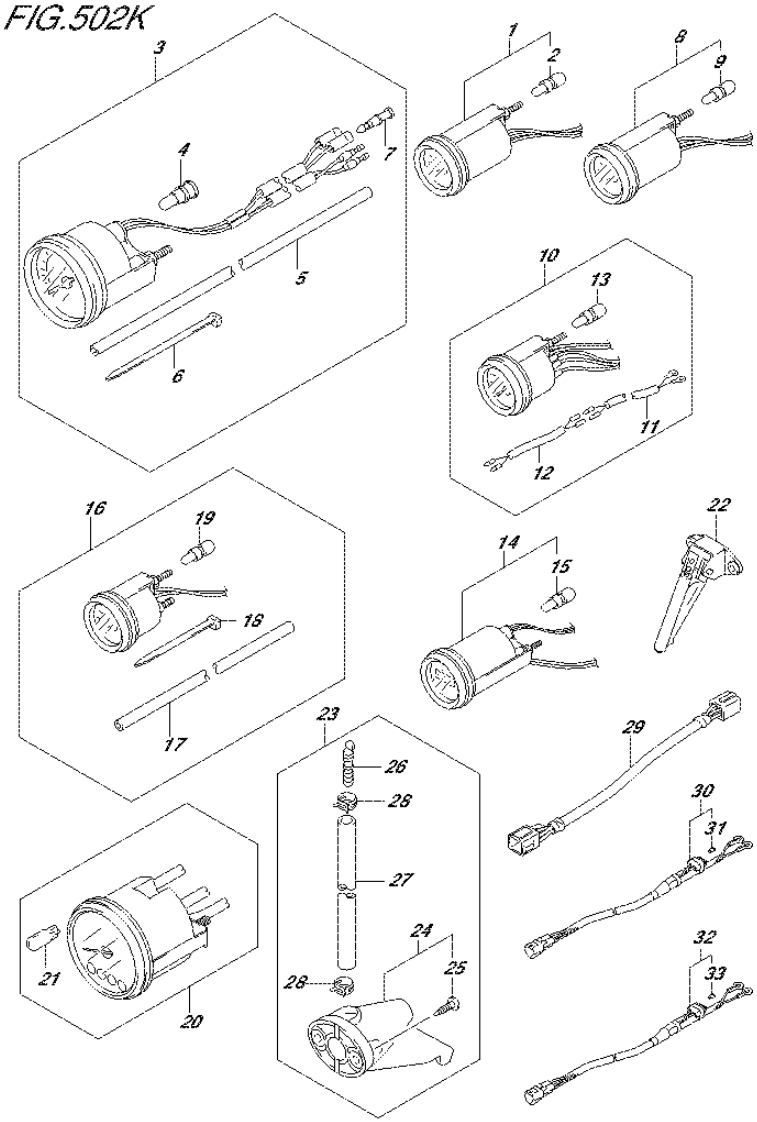

FIG.502K (2-K-14) OPT:METER (1) (DF90ATH E40)

REF NO.	PART NO.	DESCRIPTION	Q'TY	REMARKS
1-1	34800-93J00	METER ASSY, TRIM	1	BLACK
1-2	34800-93J11	METER ASSY, TRIM	1	WHITE
2	09471-12103	.BULB (12V,3W,T6.5)	1	
3-1	34100-93J00	SPEEDOMETER ASSY	1	MAX 130KM/H BLACK
3-2	34100-93J11	SPEEDOMETER ASSY	1	MAX 130KM/H WHITE
3-3	34100-93J20	SPEEDOMETER ASSY	1	MAX 80KM/H BLACK
3-4	34100-93J31	SPEEDOMETER ASSY	1	MAX 80KM/H WHITE
3-5	34100-93J40	SPEEDOMETER ASSY	1	MAX 45KNOTS BLACK
3-6	34100-93J51	SPEEDOMETER ASSY	1	MAX 45KNOTS WHITE
3-7	34100-93J60	SPEEDOMETER ASSY	1	MAX 65KNOTS WHITE
4	09471-12028	.BULB (12V,3.4W)	1	
5	34191-92E00	.TUBE	1	
6	09407-14407	.CLAMP (L:145)	2	
7	36615-96300	.TERMINAL, RESIN	2	
8-1	34600-93J00	METER ASSY, VOLTAGE	1	BLACK
8-2	34600-93J11	METER ASSY, VOLTAGE	1	WHITE
9	09471-12103	.BULB (12V,3W,T6.5)	1	
10-1	34300-93J00	GAUGE ASSY, FUEL	1	BLACK
10-2	34300-93J11	GAUGE ASSY, FUEL	1	WHITE
11	34310-92E00	.LEAD, FUEL GAUGE	1	
12	34360-92E00	.ADAPTER, FUEL GAUGE	1	
13	09471-12103	.BULB (12V,3W,T6.5)	1	
14-1	34500-93J00	METER ASSY, HOUR	1	BLACK
14-2	34500-93J11	METER ASSY, HOUR	1	WHITE
15	09471-12103	.BULB (12V,3W,T6.5)	1	
16-1	34650-93J20	GAUGE ASSY, WATER PRESSURE	1	15PSI BLACK
16-2	34650-93J31	GAUGE ASSY, WATER PRESSURE	1	15PSI WHITE
17	34191-92E00	.TUBE	1	
18	09407-14407	.CLAMP (L:145)	2	
19	09471-12103	.BULB (12V,3W,T6.5)	1	
20-1	34200-93J00	TACHOMETER ASSY, WITH MONITOR	1	BLACK
20-2	34200-93J12	TACHOMETER ASSY, WITH MONITOR	1	WHITE
21	09471-12077	.BULB (12V,1.7W)	1	

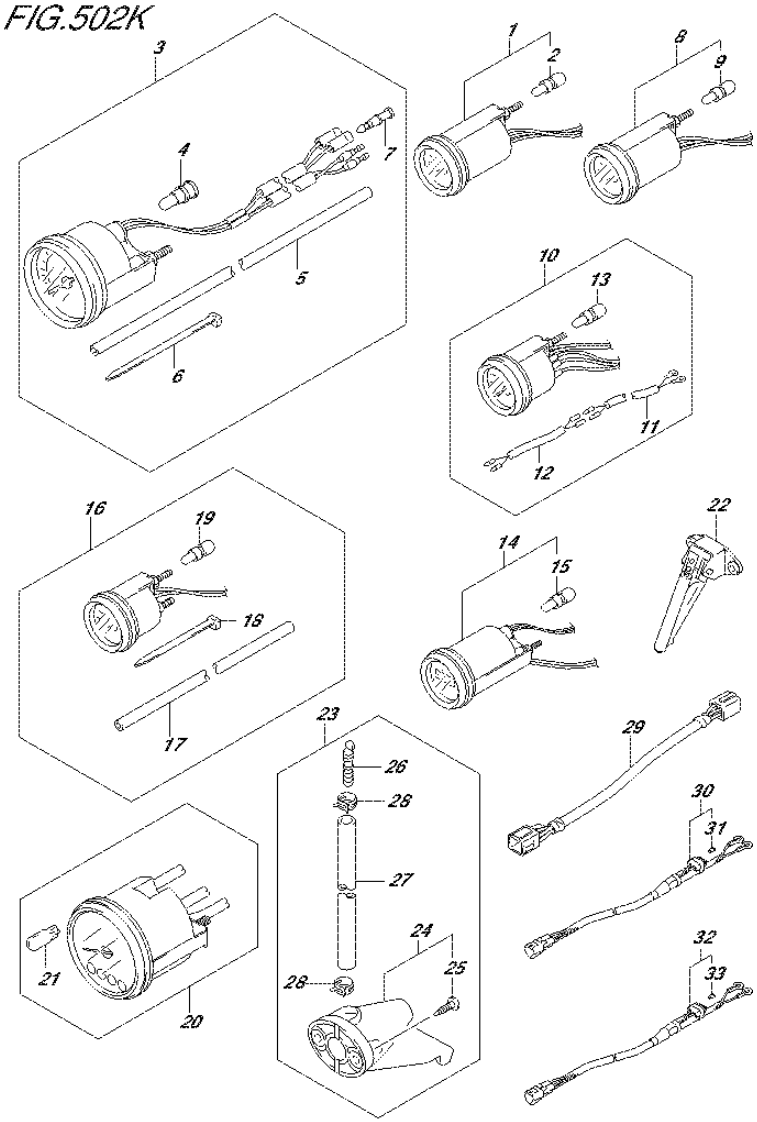

FIG.502K (2-K-15) OPT:METER (1) (DF90ATH E40)

REF NO.	PART NO.	DESCRIPTION	Q'TY	REMARKS
22	34190-87D00	SENDER ASSY, SPEEDOMETER	1	
23	34120-98J01	KIT, SPEEDOMETER SUB	1	
24	34190-95500	.SENDER ASSY, SPEEDOMETER	1	
25	03112-06303	..SCREW	2	
26	55127-87D00	.UNION, SPEEDOMETER HOSE	1	
27	09355-40805-00B	.HOSE (4X8X2000)	1	L:2000->1700
28	09407-10404	.CLAMP (L:100)	2	
29	36682-92E00	WIRE, TRIM METER	1	
30	36663-98J00	WIRE, GAUGE POWER (2.5M)	1	
31	09481-05501	.FUSE (5A)	1	
32	36663-98J10	HARNESS, ACTIVE HUB PWR (6M)	1	
33	09481-05501	.FUSE (5A)	1	

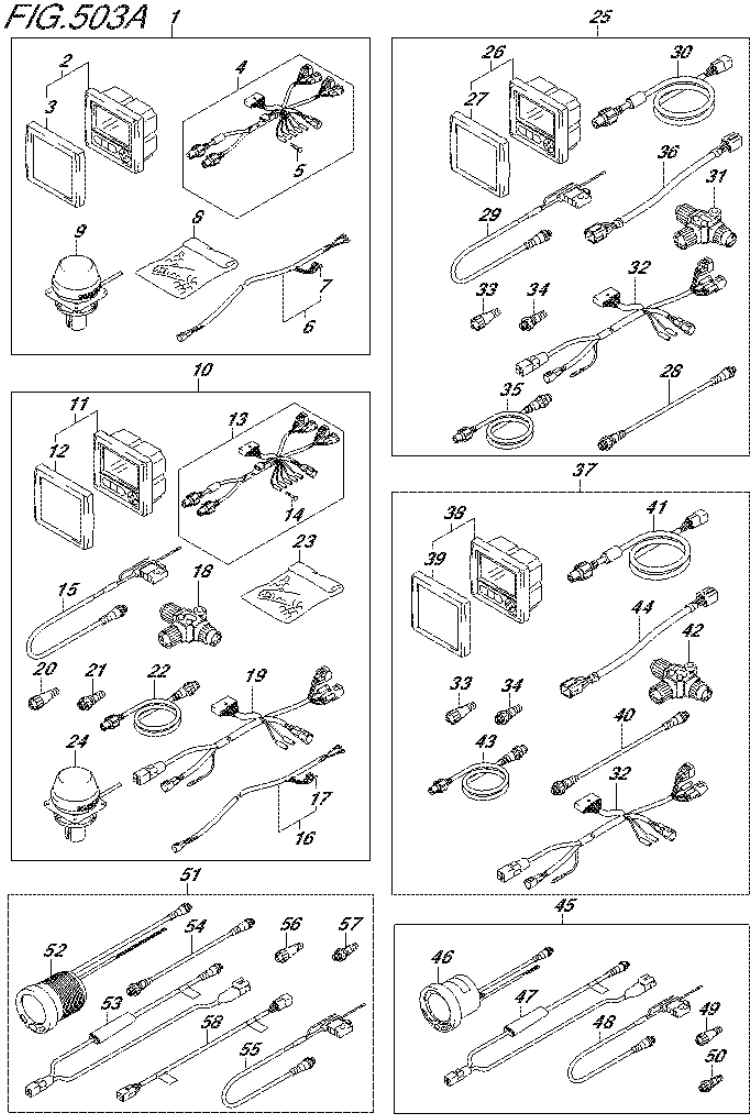

FIG.503A (2-L-2) OPT:METER (2)

REF NO.	PART NO.	DESCRIPTION	Q'TY	REMARKS
1	34011-87L00	KIT, SINGLE GAUGE	1	
2	34200-87L12	.GAUGE ASSY, MULTI	1	
3	34211-87L00	..COVER, FRONT	1	
4	36661-87L00	.ADAPTER, GAUGE	1	
5	36615-96300	..TERMINAL, RESIN	5	
6	36663-98J10	.HARNESS,ACTIVE HUB PWR (6M)	1	
7	09481-05501	..FUSE (5A)	1	
8	36990-87D00	.TERMINAL & SLEEVE SET	1	
9	39950-87L00	.MODULE ASSY, GPS RECEIVER	1	
10	34011-87L10	KIT, DUAL GAUGE	1	
11	34200-87L12	.GAUGE ASSY, MULTI	2	
12	34211-87L00	..COVER, FRONT	2	
13	36661-87L00	.ADAPTER, GAUGE	2	
14	36615-96300	..TERMINAL, RESIN	10	
15	36663-88L00	.HARNESS ASSY, NETWORK POWER	1	
16	36663-98J10	.HARNESS,ACTIVE HUB PWR (6M)	1	
17	09481-05501	..FUSE (5A)	1	
18	36664-88L00	.CONNECTOR, BRANCH	3	
19	36665-87L00	.ADAPTER, GAUGE FOR MULTI	1	
20	36665-88L00	.UNIT, RESISTOR FEMALE	1	
21	36665-88L10	.UNIT, RESISTOR MALE	1	
22	36666-87L00	.WIRE, NETWORK	2	
23	36990-87D00	.TERMINAL & SLEEVE SET	1	
24	39950-87L00	.MODULE ASSY, GPS RECEIVER	1	
25	34011-87L40	KIT, SNGL GAUGE & DUAL STATION	1	
26	34200-87L12	.GAUGE ASSY, MULTI	1	
27	34211-87L00	..COVER, FRONT	1	
28	36662-88L00	.WIRE, 25 EXTENSION	1	
29	36663-88L00	.HARNESS ASSY, NETWORK POWER	1	
30	36664-87L00	.ADAPTER, GAUGE FOR DUAL	1	
31	36664-88L00	.CONNECTOR, BRANCH	3	
32	36665-87L00	.ADAPTER, GAUGE FOR MULTI	1	
33	36665-88L00	.UNIT, RESISTOR FEMALE	1	
34	36665-88L10	.UNIT, RESISTOR MALE	1	

FIG.503A

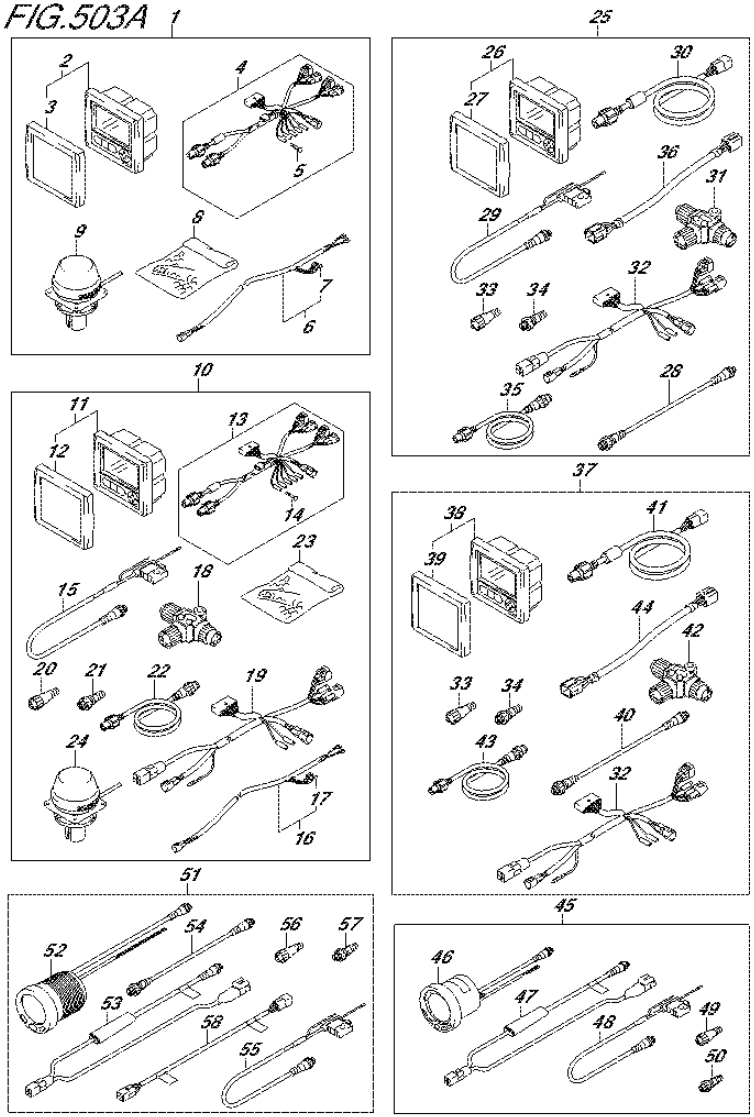

FIG.503A (2-L-3) OPT:METER (2)

REF NO.	PART NO.	DESCRIPTION	Q'TY	REMARKS
35	36666-87L00	.WIRE, NETWORK	2	
36	36682-92E00	.WIRE, TRIM METER EXT (L:6500)	1	
37	34011-87L50	KIT, DUAL GAUGE & DUAL STATION	1	
38	34200-87L12	.GAUGE ASSY, MULTI	2	
39	34211-87L00	..COVER, FRONT	2	
40	36662-88L00	.WIRE, 25 EXTENSION	1	
41	36664-87L00	.ADAPTER, GAUGE FOR DUAL	2	
42	36664-88L00	.CONNECTOR, BRANCH	2	
43	36666-87L00	.WIRE, NETWORK	2	
44	36682-92E00	.WIRE, TRIM METER EXT (L:6500)	2	
45	34011-88L03	KIT, 4 IN MULTI GAUGE	1	
46	34200-88L02	.GAUGE ASSY, 4 IN MULTI	1	
47	34922-88L02	.UNIT, INTERFACE	1	
48	36663-88L00	.HARNESS ASSY, NETWORK POWER	1	
49	36665-88L00	.UNIT, RESISTOR FEMALE	1	
50	36665-88L10	.UNIT, RESISTOR MALE	1	
51	34011-88L13	KIT, 2 IN MULTI GAUGE	1	
52	34800-88L01	.GAUGE ASSY, 2 IN MULTI	1	
53	34922-88L02	.UNIT, INTERFACE	1	
54	36662-88L00	.WIRE, 25 EXTENSION	1	
55	36663-88L00	.HARNESS ASSY, NETWORK POWER	1	
56	36665-88L00	.UNIT, RESISTOR FEMALE	1	
57	36665-88L10	.UNIT, RESISTOR MALE	1	
58	36668-88L00	.WIRE COMP,ADAPTER TO DIAGNS	1	

FIG.507A

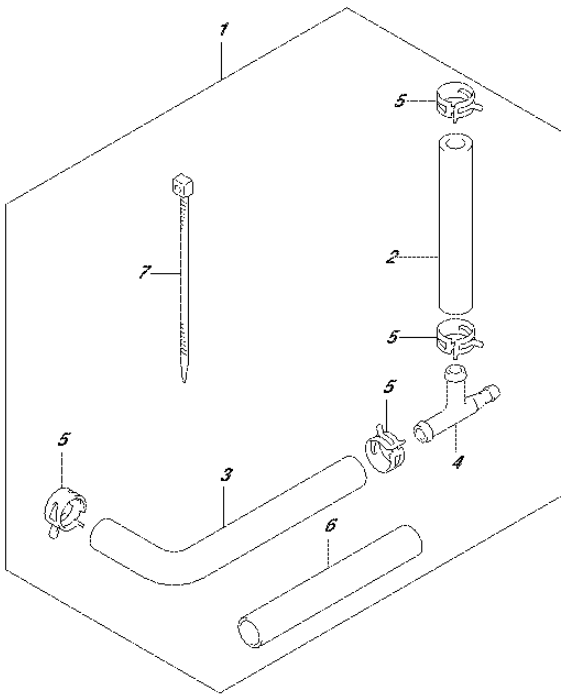

FIG.507A (2-L-4) OPT:WATER PRESSURE GAUGE SUB KIT

REF NO.	PART NO.	DESCRIPTION	Q'TY	REMARKS
1	34660-90J02	WATER PRESSURE GAUGE SUB KIT	1	
2	09352-50903-600	.HOSE (5X9X600)	1	L:600->160
3	09352-50903-600	.HOSE (5X9X600)	1	L:600->210
4	09367-06006	.3 WAY	1	
5	09401-08413	.CLIP	4	
6	18498-99EA0	.PROTECTOR (L:80)	1	
7	09407-25402	.CLAMP (L:250)	1	

FIG.508A

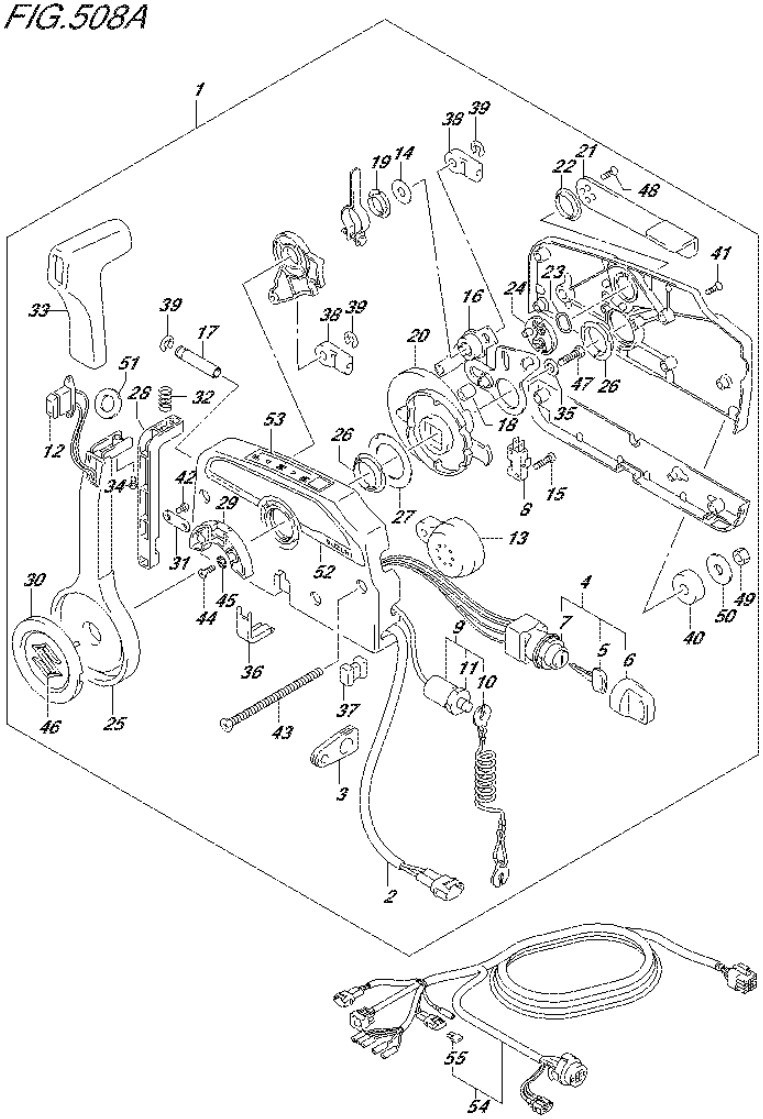

FIG.508A (2-L-5) OPT:REMOTE CONTROL (DF70A E01)

REF NO.	PART NO.	DESCRIPTION	Q'TY	REMARKS
1	67200-93J50	REMOTE CONTROL ASSY	1	
2	36646-93J01	.WIRE ASSY, PTT SW ADAPTER	1	
3	36628-92E00	.GROMMET, WIRE HARNESS	1	
4	37110-93J11	.SWITCH ASSY, IGNITION	1	
5-1	37141-99E00	..KEY (931)	2	
5-2	37141-99E10	..KEY (932)	2	
5-3	37141-99E20	..KEY (933)	2	
5-4	37141-99E30	..KEY (934)	2	
5-5	37141-99E40	..KEY (935)	2	
5-6	37141-99E50	..KEY (936)	2	
5-7	37141-99E60	..KEY (937)	2	
5-8	37141-99E70	..KEY (938)	2	
5-9	37141-99E80	..KEY (939)	2	
5-10	37141-99E90	..KEY (940)	2	
5-11	37141-99EA0	..KEY (941)	2	
5-12	37141-99EB0	..KEY (942)	2	
6	37143-99E00	..CAP, KEY	2	
7	37149-93J00	..CAP CYLINDER BODY	1	
8	37721-93J91	.SWITCH, NEUTRAL	1	
9	37820-93J04	.SWITCH ASSY, EMERGENCY	1	
10	37823-92E01	..PLATE	1	
11	37826-92J00	..NUT	1	
12	37850-90J05	.SWITCH ASSY, PTT	1	
13	38500-93J90	.BUZZER	1	
14	67212-95600	.WASHER	1	
15	67296-92E11	.SCREW, NEUTRAL SW	2	
16	67220-95630	.PLATE ASSY	1	
17	67223-99E10	.KNOB, BRAKE ADJ	1	
18	67229-95600	.ROLLER	1	
19	67232-95600	.BUSH	1	
20	67238-87D00	.GEAR, DRIVE	1	
21	67241-99E10	.LEVER, FREE THROTTLE	1	
22	67243-95600	.BUSH	1	
23	67244-95600	.WASHER, WAVE	1	

FIG.508A

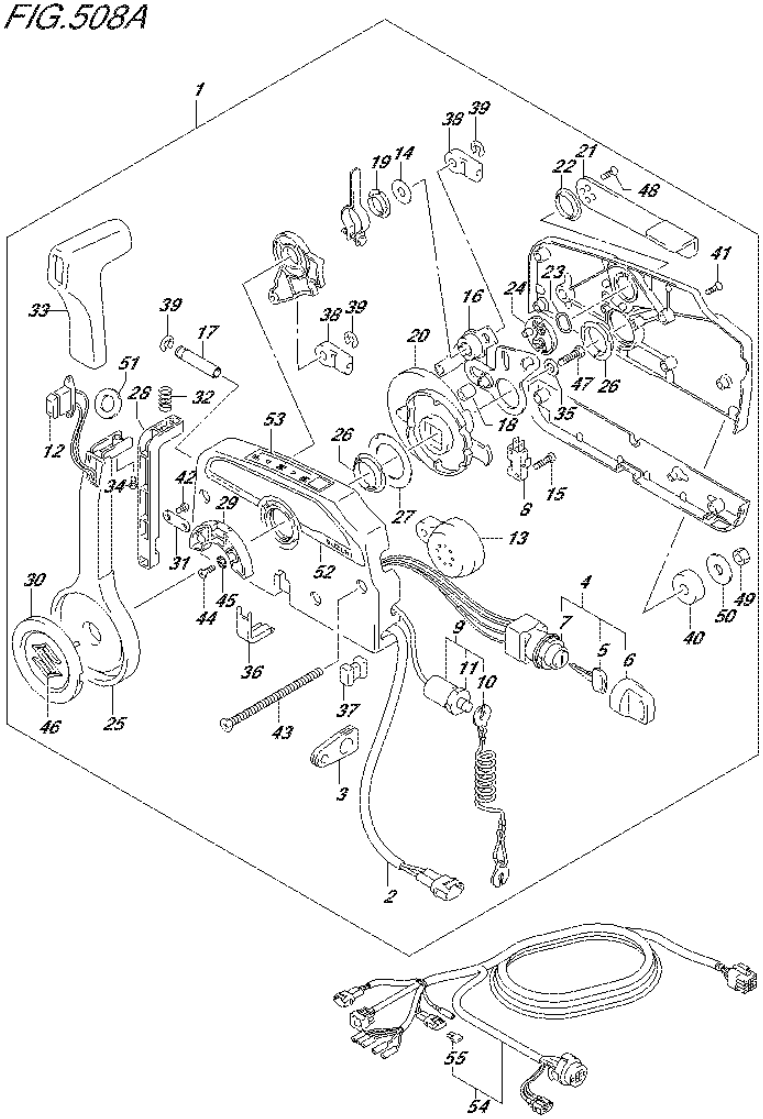

FIG.508A (2-L-6) OPT:REMOTE CONTROL (DF70A E01)

REF NO.	PART NO.	DESCRIPTION	Q'TY	REMARKS
24	67245-95600	.DRUM, FREE THROTTLE	1	
25	67251-99E20	.LEVER, HANDLE	1	
26	67252-95600	.BUSH	2	
27	67253-95600	.WASHER	1	
28	67255-99E10	.ARM, LOCK	1	
29	67256-95600	.HOLDER, NEUT LOCK	1	
30	67257-99E10	.CAP, LEVER	1	
31	67258-99E00	.BRACKET, LOCK ARM	1	
32	67259-87D00	.SPRING, NEUTRAL ARM	1	
33	67261-99E10	.GRIP	1	
34	67296-94310	.SCREW	1	
35	67264-95600	.WASHER	1	
36	67267-93J00	.COVER, WIRE	1	
37	67273-95600	.SPACER	1	
38	67275-95600	.END, CABLE	2	
39	67292-94300	.E RING	3	
40	67294-95600	.SPACER	3	
41	67296-90J00	.SCREW	5	
42	67296-94300	.SCREW	2	
43	67296-95600	.SCREW	3	
44	67296-95610	.SCREW	2	
45	67297-95600	.WASHER	2	
46	77811-54GB0-0PG	.EMBLEM, REAR MARK S (CHROME)	1	
47	09100-08232	.BOLT (8X30)	1	
48	09126-05003	.SCREW (5X12)	2	
49	09140-06020	.NUT	3	
50	09160-06104	.WASHER (6.5X24X2)	3	
51	37859-90J00	.SPACER	1	
52	67282-94L00	.DECAL, REMOCON SIDE	1	
53	67284-94L00	.MARK, HANDLE LEVER	1	
54-1	36620-93J02	WIRE ASSY, REMOTE CONTROL	1	L:5000
54-2	36620-93J52	WIRE ASSY, REMOTE CONTROL	1	L:3500
54-3	36620-93J62	WIRE ASSY, REMOTE CONTROL	1	L:6500
55	09481-10501	.FUSE (10A)	1	

FIG.508B

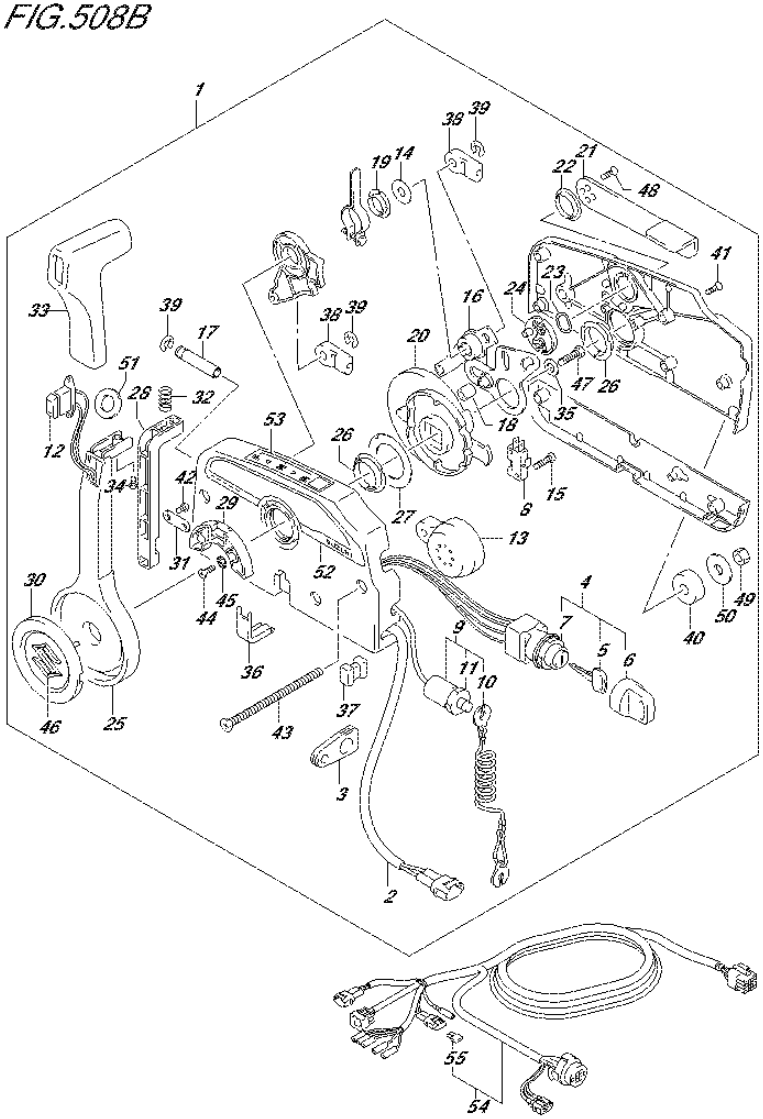

FIG.508B (2-L-7) OPT:REMOTE CONTROL (DF70A E40)

REF NO.	PART NO.	DESCRIPTION	Q'TY	REMARKS
1	67200-93J50	REMOTE CONTROL ASSY	1	
2	36646-93J01	.WIRE ASSY, PTT SW ADAPTER	1	
3	36628-92E00	.GROMMET, WIRE HARNESS	1	
4	37110-93J11	.SWITCH ASSY, IGNITION	1	
5-1	37141-99E00	..KEY (931)	2	
5-2	37141-99E10	..KEY (932)	2	
5-3	37141-99E20	..KEY (933)	2	
5-4	37141-99E30	..KEY (934)	2	
5-5	37141-99E40	..KEY (935)	2	
5-6	37141-99E50	..KEY (936)	2	
5-7	37141-99E60	..KEY (937)	2	
5-8	37141-99E70	..KEY (938)	2	
5-9	37141-99E80	..KEY (939)	2	
5-10	37141-99E90	..KEY (940)	2	
5-11	37141-99EA0	..KEY (941)	2	
5-12	37141-99EB0	..KEY (942)	2	
6	37143-99E00	..CAP, KEY	2	
7	37149-93J00	..CAP CYLINDER BODY	1	
8	37721-93J91	.SWITCH, NEUTRAL	1	
9	37820-93J04	.SWITCH ASSY, EMERGENCY	1	
10	37823-92E01	..PLATE	1	
11	37826-92J00	..NUT	1	
12	37850-90J05	.SWITCH ASSY, PTT	1	
13	38500-93J90	.BUZZER	1	
14	67212-95600	.WASHER	1	
15	67296-92E11	.SCREW, NEUTRAL SW	2	
16	67220-95630	.PLATE ASSY	1	
17	67223-99E10	.KNOB, BRAKE ADJ	1	
18	67229-95600	.ROLLER	1	
19	67232-95600	.BUSH	1	
20	67238-87D00	.GEAR, DRIVE	1	
21	67241-99E10	.LEVER, FREE THROTTLE	1	
22	67243-95600	.BUSH	1	
23	67244-95600	.WASHER, WAVE	1	

FIG.508B

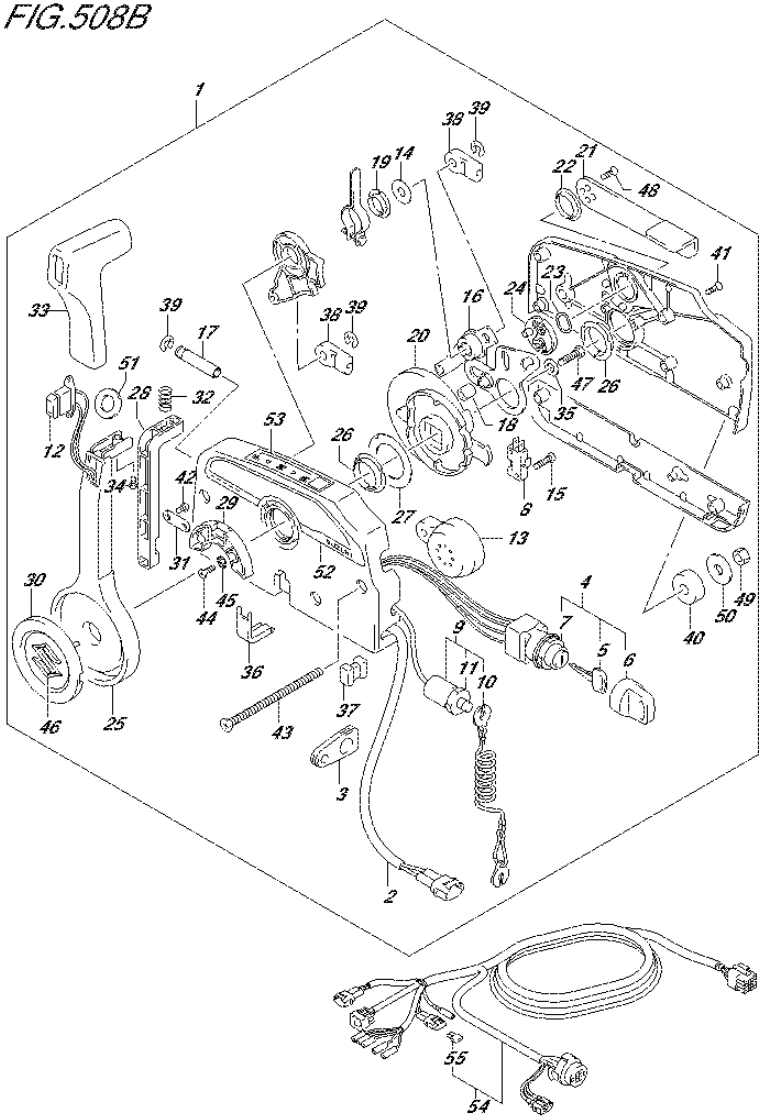

FIG.508B (2-L-8) OPT:REMOTE CONTROL (DF70A E40)

REF NO.	PART NO.	DESCRIPTION	Q'TY	REMARKS
24	67245-95600	.DRUM, FREE THROTTLE	1	
25	67251-99E20	.LEVER, HANDLE	1	
26	67252-95600	.BUSH	2	
27	67253-95600	.WASHER	1	
28	67255-99E10	.ARM, LOCK	1	
29	67256-95600	.HOLDER, NEUT LOCK	1	
30	67257-99E10	.CAP, LEVER	1	
31	67258-99E00	.BRACKET, LOCK ARM	1	
32	67259-87D00	.SPRING, NEUTRAL ARM	1	
33	67261-99E10	.GRIP	1	
34	67296-94310	.SCREW	1	
35	67264-95600	.WASHER	1	
36	67267-93J00	.COVER, WIRE	1	
37	67273-95600	.SPACER	1	
38	67275-95600	.END, CABLE	2	
39	67292-94300	.E RING	3	
40	67294-95600	.SPACER	3	
41	67296-90J00	.SCREW	5	
42	67296-94300	.SCREW	2	
43	67296-95600	.SCREW	3	
44	67296-95610	.SCREW	2	
45	67297-95600	.WASHER	2	
46	77811-54GB0-0PG	.EMBLEM, REAR MARK S (CHROME)	1	
47	09100-08232	.BOLT (8X30)	1	
48	09126-05003	.SCREW (5X12)	2	
49	09140-06020	.NUT	3	
50	09160-06104	.WASHER (6.5X24X2)	3	
51	37859-90J00	.SPACER	1	
52	67282-94L00	.DECAL, REMOCON SIDE	1	
53	67284-94L00	.MARK, HANDLE LEVER	1	
54-1	36620-93J02	WIRE ASSY, REMOTE CONTROL	1	L:5000
54-2	36620-93J52	WIRE ASSY, REMOTE CONTROL	1	L:3500
54-3	36620-93J62	WIRE ASSY, REMOTE CONTROL	1	L:6500
55	09481-10501	.FUSE (10A)	1	

FIG.508C

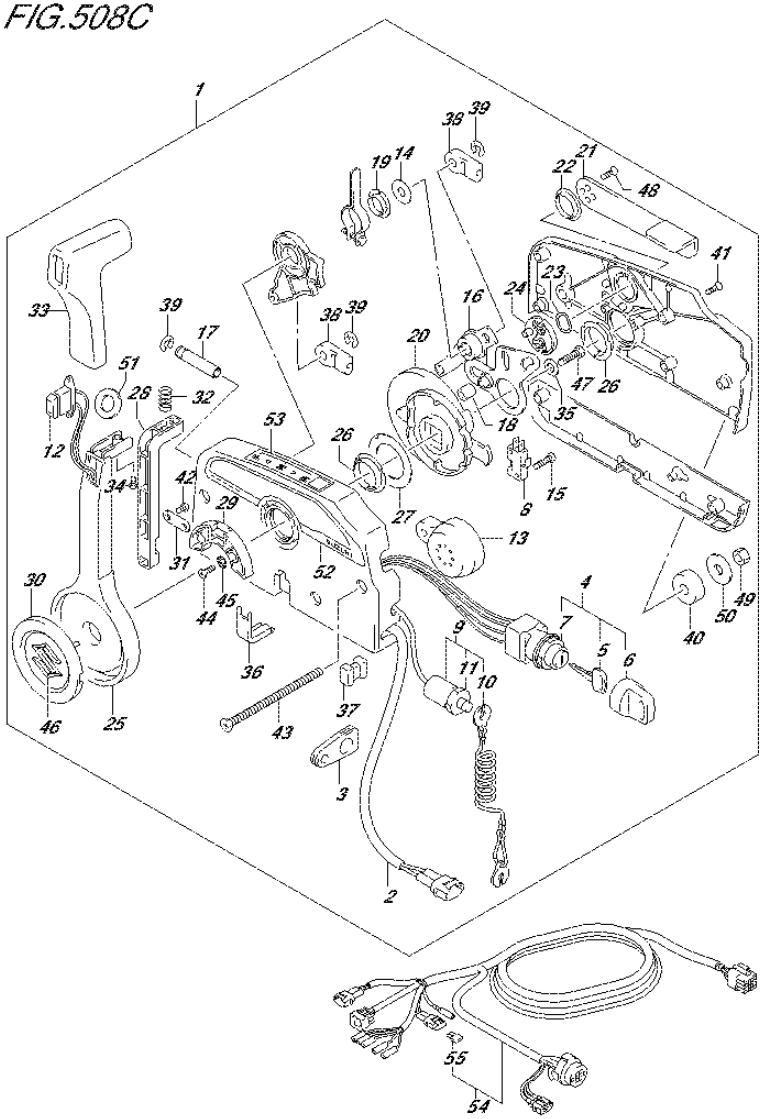

FIG.508C (2-L-9) OPT:REMOTE CONTROL (DF80A E01)

REF NO.	PART NO.	DESCRIPTION	Q'TY	REMARKS
1	67200-93J50	REMOTE CONTROL ASSY	1	
2	36646-93J01	.WIRE ASSY, PTT SW ADAPTER	1	
3	36628-92E00	.GROMMET, WIRE HARNESS	1	
4	37110-93J11	.SWITCH ASSY, IGNITION	1	
5-1	37141-99E00	..KEY (931)	2	
5-2	37141-99E10	..KEY (932)	2	
5-3	37141-99E20	..KEY (933)	2	
5-4	37141-99E30	..KEY (934)	2	
5-5	37141-99E40	..KEY (935)	2	
5-6	37141-99E50	..KEY (936)	2	
5-7	37141-99E60	..KEY (937)	2	
5-8	37141-99E70	..KEY (938)	2	
5-9	37141-99E80	..KEY (939)	2	
5-10	37141-99E90	..KEY (940)	2	
5-11	37141-99EA0	..KEY (941)	2	
5-12	37141-99EB0	..KEY (942)	2	
6	37143-99E00	..CAP, KEY	2	
7	37149-93J00	..CAP CYLINDER BODY	1	
8	37721-93J91	.SWITCH, NEUTRAL	1	
9	37820-93J04	.SWITCH ASSY, EMERGENCY	1	
10	37823-92E01	..PLATE	1	
11	37826-92J00	..NUT	1	
12	37850-90J05	.SWITCH ASSY, PTT	1	
13	38500-93J90	.BUZZER	1	
14	67212-95600	.WASHER	1	
15	67296-92E11	.SCREW, NEUTRAL SW	2	
16	67220-95630	.PLATE ASSY	1	
17	67223-99E10	.KNOB, BRAKE ADJ	1	
18	67229-95600	.ROLLER	1	
19	67232-95600	.BUSH	1	
20	67238-87D00	.GEAR, DRIVE	1	
21	67241-99E10	.LEVER, FREE THROTTLE	1	
22	67243-95600	.BUSH	1	
23	67244-95600	.WASHER, WAVE	1	

FIG.508C

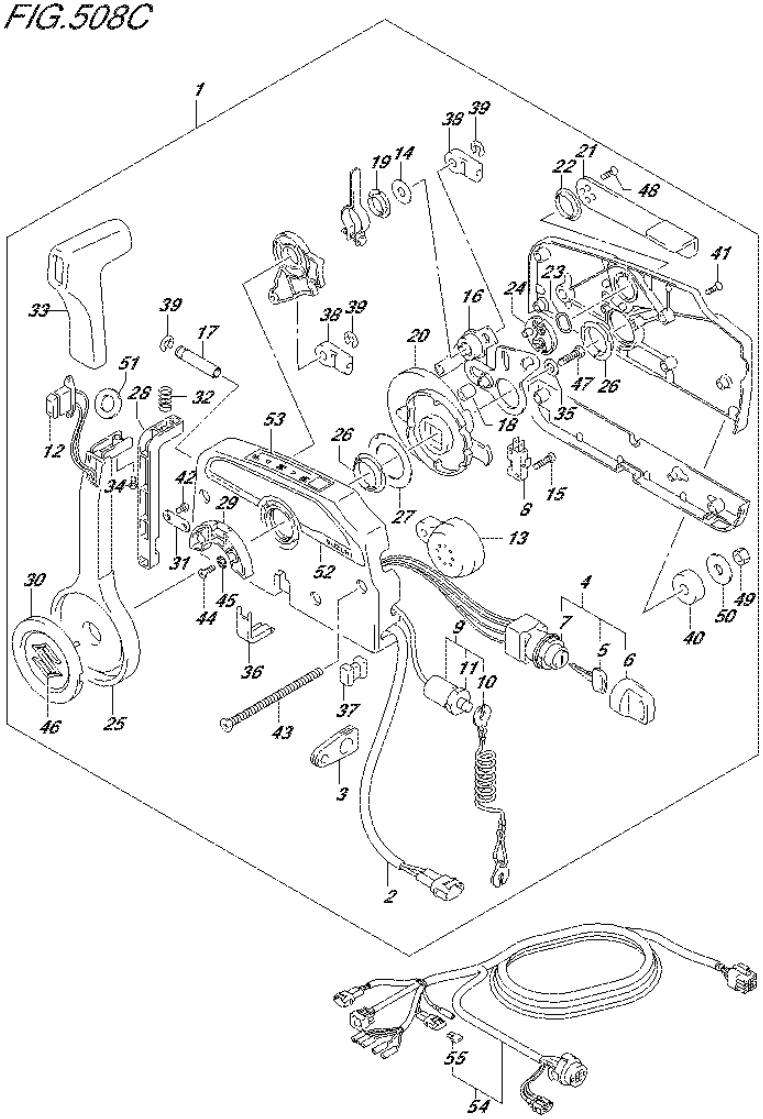

FIG.508C (2-L-10) OPT:REMOTE CONTROL (DF80A E01)

REF NO.	PART NO.	DESCRIPTION	Q'TY	REMARKS
24	67245-95600	.DRUM, FREE THROTTLE	1	
25	67251-99E20	.LEVER, HANDLE	1	
26	67252-95600	.BUSH	2	
27	67253-95600	.WASHER	1	
28	67255-99E10	.ARM, LOCK	1	
29	67256-95600	.HOLDER, NEUT LOCK	1	
30	67257-99E10	.CAP, LEVER	1	
31	67258-99E00	.BRACKET, LOCK ARM	1	
32	67259-87D00	.SPRING, NEUTRAL ARM	1	
33	67261-99E10	.GRIP	1	
34	67296-94310	.SCREW	1	
35	67264-95600	.WASHER	1	
36	67267-93J00	.COVER, WIRE	1	
37	67273-95600	.SPACER	1	
38	67275-95600	.END, CABLE	2	
39	67292-94300	.E RING	3	
40	67294-95600	.SPACER	3	
41	67296-90J00	.SCREW	5	
42	67296-94300	.SCREW	2	
43	67296-95600	.SCREW	3	
44	67296-95610	.SCREW	2	
45	67297-95600	.WASHER	2	
46	77811-54GB0-0PG	.EMBLEM, REAR MARK S (CHROME)	1	
47	09100-08232	.BOLT (8X30)	1	
48	09126-05003	.SCREW (5X12)	2	
49	09140-06020	.NUT	3	
50	09160-06104	.WASHER (6.5X24X2)	3	
51	37859-90J00	.SPACER	1	
52	67282-94L00	.DECAL, REMOCON SIDE	1	
53	67284-94L00	.MARK, HANDLE LEVER	1	
54-1	36620-93J02	WIRE ASSY, REMOTE CONTROL	1	L:5000
54-2	36620-93J52	WIRE ASSY, REMOTE CONTROL	1	L:3500
54-3	36620-93J62	WIRE ASSY, REMOTE CONTROL	1	L:6500
55	09481-10501	.FUSE (10A)	1	

FIG.508D

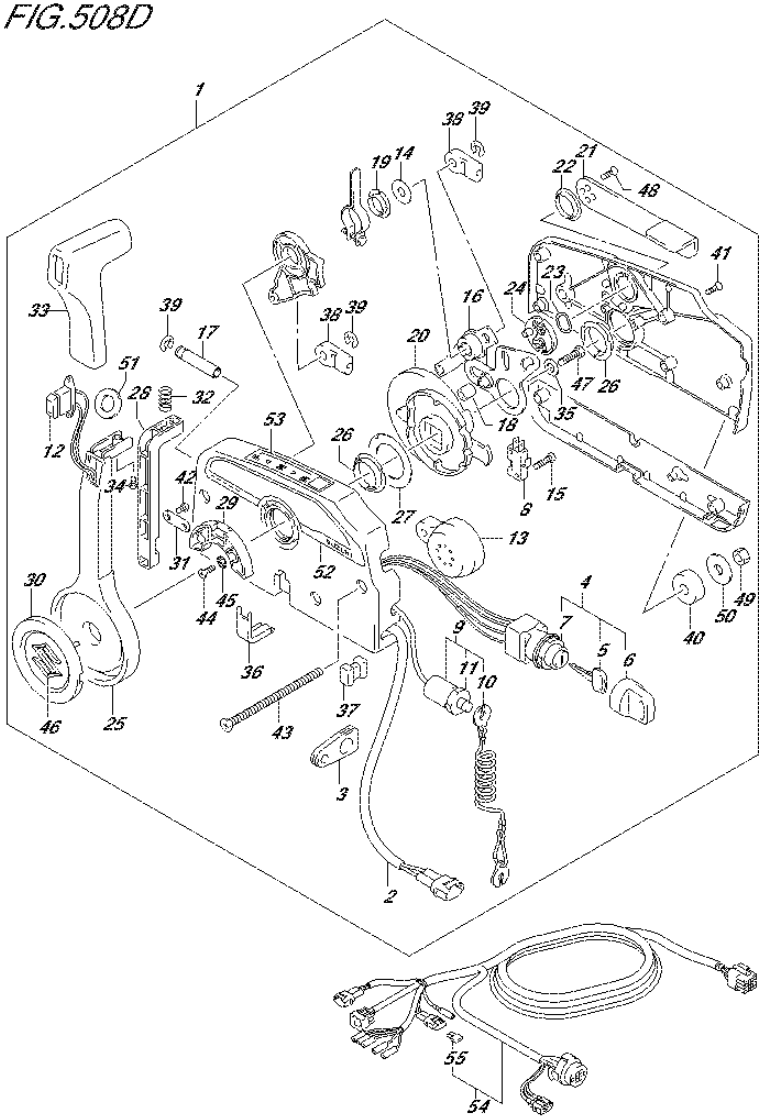

FIG.508D (2-L-11) OPT:REMOTE CONTROL (DF80A E40)

REF NO.	PART NO.	DESCRIPTION	Q'TY	REMARKS
1	67200-93J50	REMOTE CONTROL ASSY	1	
2	36646-93J01	.WIRE ASSY, PTT SW ADAPTER	1	
3	36628-92E00	.GROMMET, WIRE HARNESS	1	
4	37110-93J11	.SWITCH ASSY, IGNITION	1	
5-1	37141-99E00	..KEY (931)	2	
5-2	37141-99E10	..KEY (932)	2	
5-3	37141-99E20	..KEY (933)	2	
5-4	37141-99E30	..KEY (934)	2	
5-5	37141-99E40	..KEY (935)	2	
5-6	37141-99E50	..KEY (936)	2	
5-7	37141-99E60	..KEY (937)	2	
5-8	37141-99E70	..KEY (938)	2	
5-9	37141-99E80	..KEY (939)	2	
5-10	37141-99E90	..KEY (940)	2	
5-11	37141-99EA0	..KEY (941)	2	
5-12	37141-99EB0	..KEY (942)	2	
6	37143-99E00	..CAP, KEY	2	
7	37149-93J00	..CAP CYLINDER BODY	1	
8	37721-93J91	.SWITCH, NEUTRAL	1	
9	37820-93J04	.SWITCH ASSY, EMERGENCY	1	
10	37823-92E01	..PLATE	1	
11	37826-92J00	..NUT	1	
12	37850-90J05	.SWITCH ASSY, PTT	1	
13	38500-93J90	.BUZZER	1	
14	67212-95600	.WASHER	1	
15	67296-92E11	.SCREW, NEUTRAL SW	2	
16	67220-95630	.PLATE ASSY	1	
17	67223-99E10	.KNOB, BRAKE ADJ	1	
18	67229-95600	.ROLLER	1	
19	67232-95600	.BUSH	1	
20	67238-87D00	.GEAR, DRIVE	1	
21	67241-99E10	.LEVER, FREE THROTTLE	1	
22	67243-95600	.BUSH	1	
23	67244-95600	.WASHER, WAVE	1	

FIG.508D

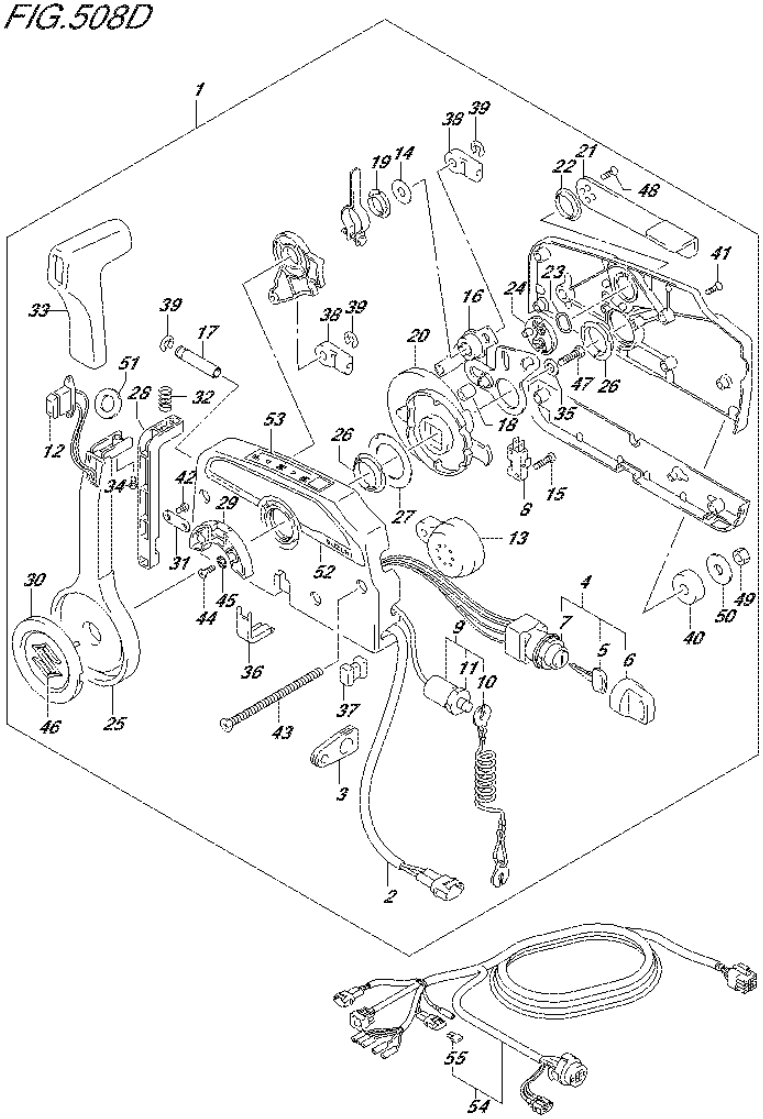

FIG.508D (2-L-12) OPT:REMOTE CONTROL (DF80A E40)

REF NO.	PART NO.	DESCRIPTION	Q'TY	REMARKS
24	67245-95600	.DRUM, FREE THROTTLE	1	
25	67251-99E20	.LEVER, HANDLE	1	
26	67252-95600	.BUSH	2	
27	67253-95600	.WASHER	1	
28	67255-99E10	.ARM, LOCK	1	
29	67256-95600	.HOLDER, NEUT LOCK	1	
30	67257-99E10	.CAP, LEVER	1	
31	67258-99E00	.BRACKET, LOCK ARM	1	
32	67259-87D00	.SPRING, NEUTRAL ARM	1	
33	67261-99E10	.GRIP	1	
34	67296-94310	.SCREW	1	
35	67264-95600	.WASHER	1	
36	67267-93J00	.COVER, WIRE	1	
37	67273-95600	.SPACER	1	
38	67275-95600	.END, CABLE	2	
39	67292-94300	.E RING	3	
40	67294-95600	.SPACER	3	
41	67296-90J00	.SCREW	5	
42	67296-94300	.SCREW	2	
43	67296-95600	.SCREW	3	
44	67296-95610	.SCREW	2	
45	67297-95600	.WASHER	2	
46	77811-54GB0-0PG	.EMBLEM, REAR MARK S (CHROME)	1	
47	09100-08232	.BOLT (8X30)	1	
48	09126-05003	.SCREW (5X12)	2	
49	09140-06020	.NUT	3	
50	09160-06104	.WASHER (6.5X24X2)	3	
51	37859-90J00	.SPACER	1	
52	67282-94L00	.DECAL, REMOCON SIDE	1	
53	67284-94L00	.MARK, HANDLE LEVER	1	
54-1	36620-93J02	WIRE ASSY, REMOTE CONTROL	1	L:5000
54-2	36620-93J52	WIRE ASSY, REMOTE CONTROL	1	L:3500
54-3	36620-93J62	WIRE ASSY, REMOTE CONTROL	1	L:6500
55	09481-10501	.FUSE (10A)	1	

FIG.508E

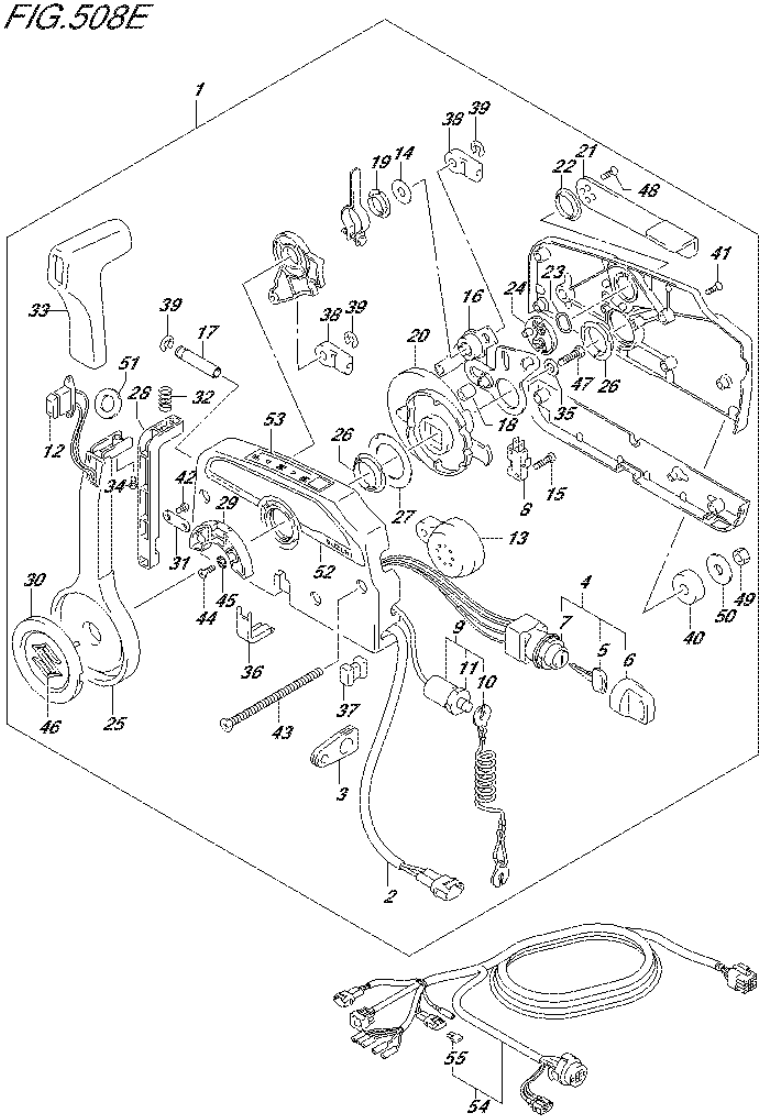

FIG.508E (2-L-13) OPT:REMOTE CONTROL (DF90A E01)

REF NO.	PART NO.	DESCRIPTION	Q'TY	REMARKS
1	67200-93J50	REMOTE CONTROL ASSY	1	
2	36646-93J01	.WIRE ASSY, PTT SW ADAPTER	1	
3	36628-92E00	.GROMMET, WIRE HARNESS	1	
4	37110-93J11	.SWITCH ASSY, IGNITION	1	
5-1	37141-99E00	..KEY (931)	2	
5-2	37141-99E10	..KEY (932)	2	
5-3	37141-99E20	..KEY (933)	2	
5-4	37141-99E30	..KEY (934)	2	
5-5	37141-99E40	..KEY (935)	2	
5-6	37141-99E50	..KEY (936)	2	
5-7	37141-99E60	..KEY (937)	2	
5-8	37141-99E70	..KEY (938)	2	
5-9	37141-99E80	..KEY (939)	2	
5-10	37141-99E90	..KEY (940)	2	
5-11	37141-99EA0	..KEY (941)	2	
5-12	37141-99EB0	..KEY (942)	2	
6	37143-99E00	..CAP, KEY	2	
7	37149-93J00	..CAP CYLINDER BODY	1	
8	37721-93J91	.SWITCH, NEUTRAL	1	
9	37820-93J04	.SWITCH ASSY, EMERGENCY	1	
10	37823-92E01	..PLATE	1	
11	37826-92J00	..NUT	1	
12	37850-90J05	.SWITCH ASSY, PTT	1	
13	38500-93J90	.BUZZER	1	
14	67212-95600	.WASHER	1	
15	67296-92E11	.SCREW, NEUTRAL SW	2	
16	67220-95630	.PLATE ASSY	1	
17	67223-99E10	.KNOB, BRAKE ADJ	1	
18	67229-95600	.ROLLER	1	
19	67232-95600	.BUSH	1	
20	67238-87D00	.GEAR, DRIVE	1	
21	67241-99E10	.LEVER, FREE THROTTLE	1	
22	67243-95600	.BUSH	1	
23	67244-95600	.WASHER, WAVE	1	

FIG.508E

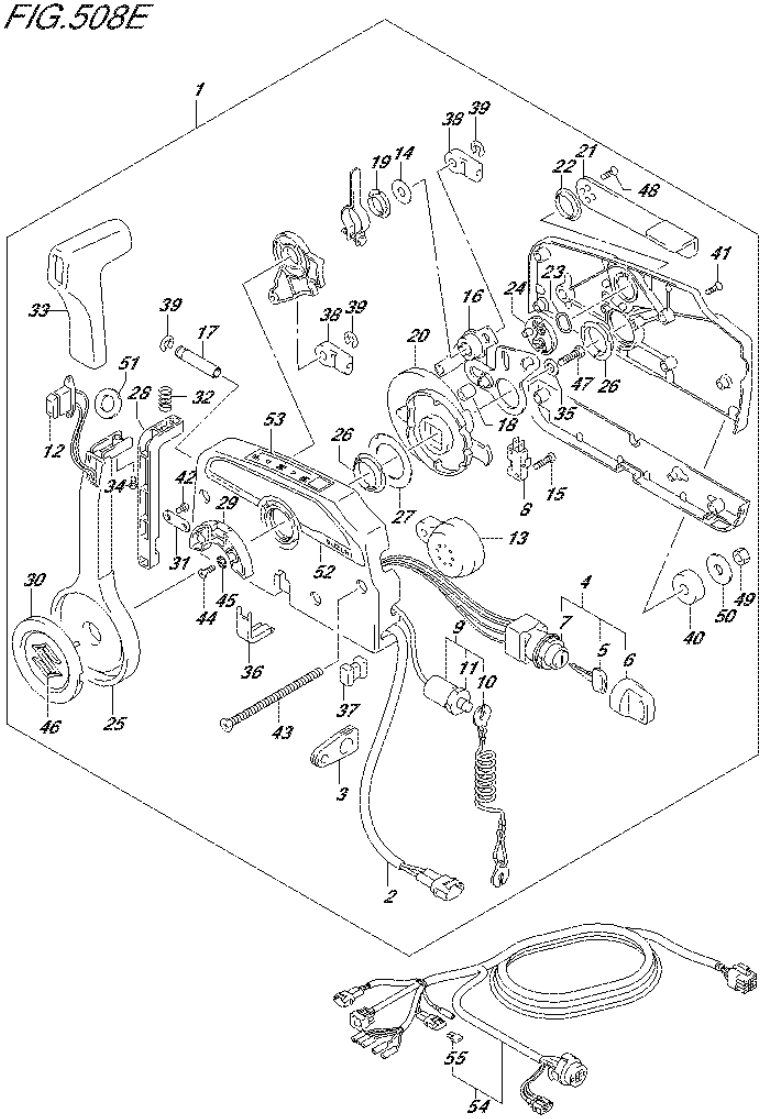

FIG.508E (2-L-14) OPT:REMOTE CONTROL (DF90A E01)

REF NO.	PART NO.	DESCRIPTION	Q'TY	REMARKS
24	67245-95600	.DRUM, FREE THROTTLE	1	
25	67251-99E20	.LEVER, HANDLE	1	
26	67252-95600	.BUSH	2	
27	67253-95600	.WASHER	1	
28	67255-99E10	.ARM, LOCK	1	
29	67256-95600	.HOLDER, NEUT LOCK	1	
30	67257-99E10	.CAP, LEVER	1	
31	67258-99E00	.BRACKET, LOCK ARM	1	
32	67259-87D00	.SPRING, NEUTRAL ARM	1	
33	67261-99E10	.GRIP	1	
34	67296-94310	.SCREW	1	
35	67264-95600	.WASHER	1	
36	67267-93J00	.COVER, WIRE	1	
37	67273-95600	.SPACER	1	
38	67275-95600	.END, CABLE	2	
39	67292-94300	.E RING	3	
40	67294-95600	.SPACER	3	
41	67296-90J00	.SCREW	5	
42	67296-94300	.SCREW	2	
43	67296-95600	.SCREW	3	
44	67296-95610	.SCREW	2	
45	67297-95600	.WASHER	2	
46	77811-54GB0-0PG	.EMBLEM, REAR MARK S (CHROME)	1	
47	09100-08232	.BOLT (8X30)	1	
48	09126-05003	.SCREW (5X12)	2	
49	09140-06020	.NUT	3	
50	09160-06104	.WASHER (6.5X24X2)	3	
51	37859-90J00	.SPACER	1	
52	67282-94L00	.DECAL, REMOCON SIDE	1	
53	67284-94L00	.MARK, HANDLE LEVER	1	
54-1	36620-93J02	WIRE ASSY, REMOTE CONTROL	1	L:5000
54-2	36620-93J52	WIRE ASSY, REMOTE CONTROL	1	L:3500
54-3	36620-93J62	WIRE ASSY, REMOTE CONTROL	1	L:6500
55	09481-10501	.FUSE (10A)	1	

FIG.508F

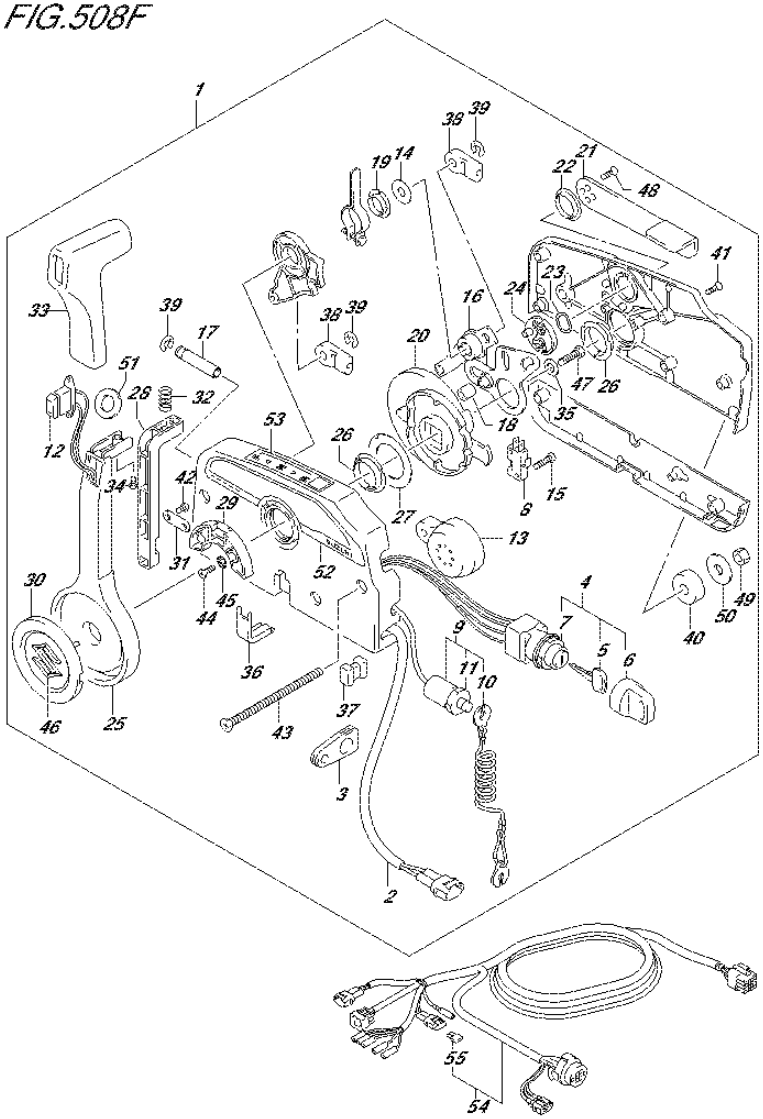

FIG.508F (2-L-15) OPT:REMOTE CONTROL (DF90A E40)

REF NO.	PART NO.	DESCRIPTION	Q'TY	REMARKS
1	67200-93J50	REMOTE CONTROL ASSY	1	
2	36646-93J01	.WIRE ASSY, PTT SW ADAPTER	1	
3	36628-92E00	.GROMMET, WIRE HARNESS	1	
4	37110-93J11	.SWITCH ASSY, IGNITION	1	
5-1	37141-99E00	..KEY (931)	2	
5-2	37141-99E10	..KEY (932)	2	
5-3	37141-99E20	..KEY (933)	2	
5-4	37141-99E30	..KEY (934)	2	
5-5	37141-99E40	..KEY (935)	2	
5-6	37141-99E50	..KEY (936)	2	
5-7	37141-99E60	..KEY (937)	2	
5-8	37141-99E70	..KEY (938)	2	
5-9	37141-99E80	..KEY (939)	2	
5-10	37141-99E90	..KEY (940)	2	
5-11	37141-99EA0	..KEY (941)	2	
5-12	37141-99EB0	..KEY (942)	2	
6	37143-99E00	..CAP, KEY	2	
7	37149-93J00	..CAP CYLINDER BODY	1	
8	37721-93J91	.SWITCH, NEUTRAL	1	
9	37820-93J04	.SWITCH ASSY, EMERGENCY	1	
10	37823-92E01	..PLATE	1	
11	37826-92J00	..NUT	1	
12	37850-90J05	.SWITCH ASSY, PTT	1	
13	38500-93J90	.BUZZER	1	
14	67212-95600	.WASHER	1	
15	67296-92E11	.SCREW, NEUTRAL SW	2	
16	67220-95630	.PLATE ASSY	1	
17	67223-99E10	.KNOB, BRAKE ADJ	1	
18	67229-95600	.ROLLER	1	
19	67232-95600	.BUSH	1	
20	67238-87D00	.GEAR, DRIVE	1	
21	67241-99E10	.LEVER, FREE THROTTLE	1	
22	67243-95600	.BUSH	1	
23	67244-95600	.WASHER, WAVE	1	

FIG.508F

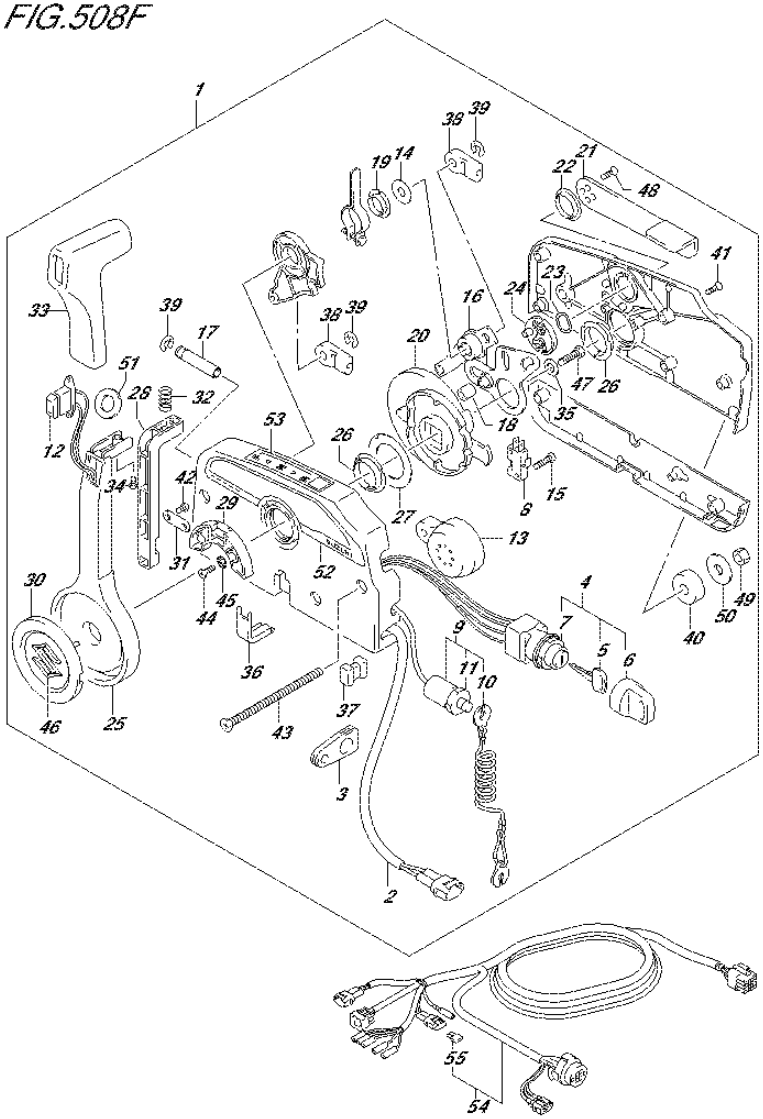

FIG.508F (3-B-2) OPT:REMOTE CONTROL (DF90A E40)

REF NO.	PART NO.	DESCRIPTION	Q'TY	REMARKS
24	67245-95600	.DRUM, FREE THROTTLE	1	
25	67251-99E20	.LEVER, HANDLE	1	
26	67252-95600	.BUSH	2	
27	67253-95600	.WASHER	1	
28	67255-99E10	.ARM, LOCK	1	
29	67256-95600	.HOLDER, NEUT LOCK	1	
30	67257-99E10	.CAP, LEVER	1	
31	67258-99E00	.BRACKET, LOCK ARM	1	
32	67259-87D00	.SPRING, NEUTRAL ARM	1	
33	67261-99E10	.GRIP	1	
34	67296-94310	.SCREW	1	
35	67264-95600	.WASHER	1	
36	67267-93J00	.COVER, WIRE	1	
37	67273-95600	.SPACER	1	
38	67275-95600	.END, CABLE	2	
39	67292-94300	.E RING	3	
40	67294-95600	.SPACER	3	
41	67296-90J00	.SCREW	5	
42	67296-94300	.SCREW	2	
43	67296-95600	.SCREW	3	
44	67296-95610	.SCREW	2	
45	67297-95600	.WASHER	2	
46	77811-54GB0-0PG	.EMBLEM, REAR MARK S (CHROME)	1	
47	09100-08232	.BOLT (8X30)	1	
48	09126-05003	.SCREW (5X12)	2	
49	09140-06020	.NUT	3	
50	09160-06104	.WASHER (6.5X24X2)	3	
51	37859-90J00	.SPACER	1	
52	67282-94L00	.DECAL, REMOCON SIDE	1	
53	67284-94L00	.MARK, HANDLE LEVER	1	
54-1	36620-93J02	WIRE ASSY, REMOTE CONTROL	1	L:5000
54-2	36620-93J52	WIRE ASSY, REMOTE CONTROL	1	L:3500
54-3	36620-93J62	WIRE ASSY, REMOTE CONTROL	1	L:6500
55	09481-10501	.FUSE (10A)	1	

FIG.519A (3-B-3) OPT:REMOTE CONTROL SPACER (DF70ATH E01)

REF NO.	PART NO.	DESCRIPTION	Q'TY	REMARKS
1	67500-93J00	KIT, R/CON SPACER SINGLE	1	
2	09125-05135	.SCREW (5X65)	4	
3	09140-05005	.NUT	4	
4	09160-05029	.WASHER (5.5X12X0.8)	4	

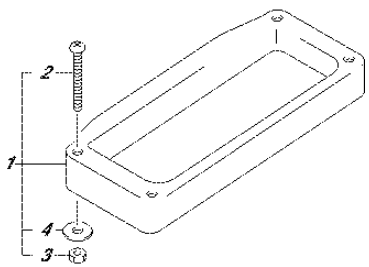

FIG.519B (3-B-4) OPT:REMOTE CONTROL SPACER (DF70ATH E40)

REF NO.	PART NO.	DESCRIPTION	Q'TY	REMARKS
1	67500-93J00	KIT, R/CON SPACER SINGLE	1	
2	09125-05135	.SCREW (5X65)	4	
3	09140-05005	.NUT	4	
4	09160-05029	.WASHER (5.5X12X0.8)	4	

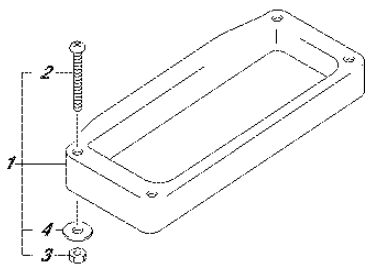

FIG.519C (3-B-5) OPT:REMOTE CONTROL SPACER (DF90ATH E01)

REF NO.	PART NO.	DESCRIPTION	Q'TY	REMARKS
1	67500-93J00	KIT, R/CON SPACER SINGLE	1	
2	09125-05135	.SCREW (5X65)	4	
3	09140-05005	.NUT	4	
4	09160-05029	.WASHER (5.5X12X0.8)	4	

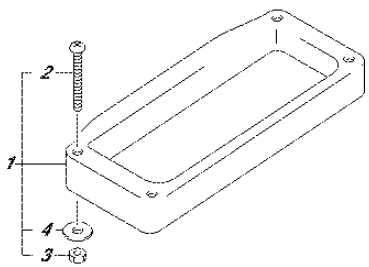

FIG.519D (3-B-6) OPT:REMOTE CONTROL SPACER (DF90ATH E40)

REF NO.	PART NO.	DESCRIPTION	Q'TY	REMARKS
1	67500-93J00	KIT, R/CON SPACER SINGLE	1	
2	09125-05135	.SCREW (5X65)	4	
3	09140-05005	.NUT	4	
4	09160-05029	.WASHER (5.5X12X0.8)	4	

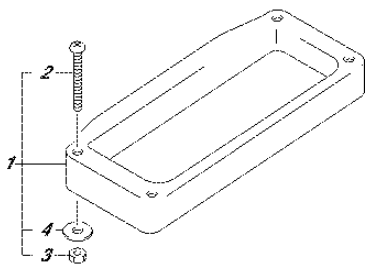

FIG.521A

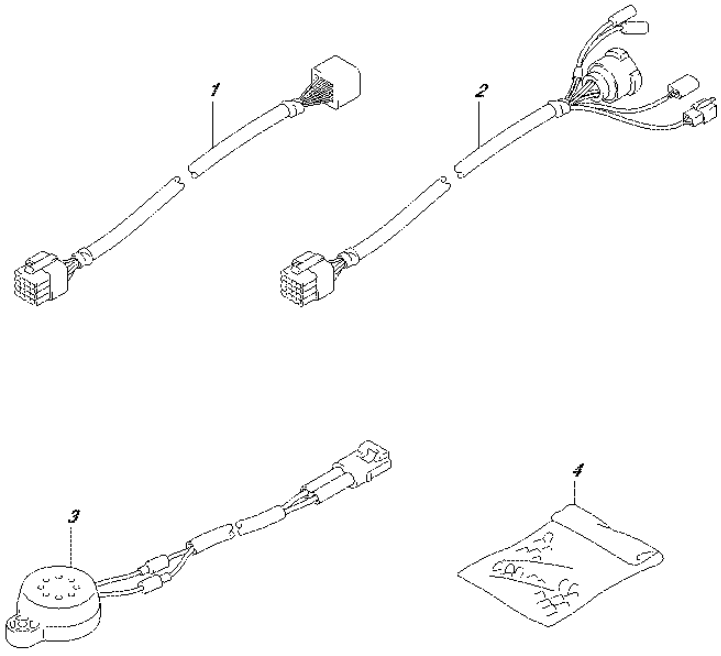

FIG.521A (3-B-7) OPT:HARNESS (DF70A E01)

REF NO.	PART NO.	DESCRIPTION	Q'TY	REMARKS
1-1	36620-93J10	WIRE ASSY, REMOCON EXTENSION	1	L:2000
1-2	36620-93J40	WIRE ASSY, REMOCON EXTENSION	1	L:3000
2	36620-93J30	WIRE ASSY, REMOCON ADAPTER	1	L:2000
3	38500-93J00	BUZZER ASSY, WARNING	1	
4	36990-87D00	TERMINAL & SLEEVE SET	1	

FIG.521B

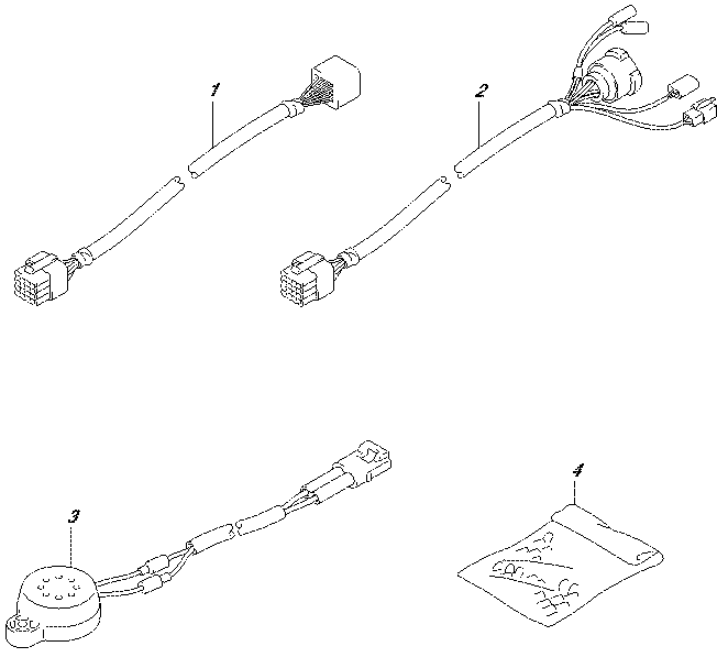

FIG.521B (3-B-8) OPT:HARNESS (DF70A E40)

REF NO.	PART NO.	DESCRIPTION	Q'TY	REMARKS
1-1	36620-93J10	WIRE ASSY, REMOCON EXTENSION	1	L:2000
1-2	36620-93J40	WIRE ASSY, REMOCON EXTENSION	1	L:3000
2	36620-93J30	WIRE ASSY, REMOCON ADAPTER	1	L:2000
3	38500-93J00	BUZZER ASSY, WARNING	1	
4	36990-87D00	TERMINAL & SLEEVE SET	1	

FIG.521C

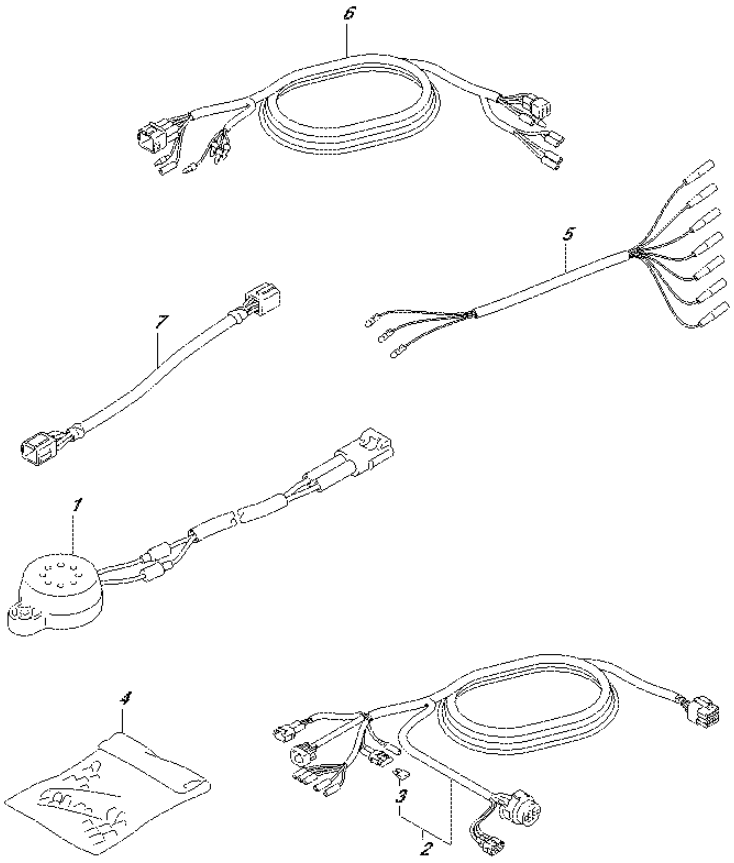

FIG.521C (3-B-9) OPT:HARNESS (DF70ATH E01)

REF NO.	PART NO.	DESCRIPTION	Q'TY	REMARKS
1	38500-93J00	BUZZER ASSY, WARNING	1	
2-1	36620-93J02	WIRE ASSY, REMOTE CONTROL	1	L:5000
2-2	36620-93J52	WIRE ASSY, REMOTE CONTROL	1	L:3500
2-3	36620-93J62	WIRE ASSY, REMOTE CONTROL	1	L:6500
3	09481-10501	.FUSE (10A)	1	
4	36990-87D00	TERMINAL & SLEEVE SET	1	
5	36630-92E00	WIRE ASSY, INSTRUMENT	1	
6	36660-94480	WIRE, MONITOR GAUGE EXTENSION	1	
7	36682-92E00	WIRE, MONITOR GAUGE EXTENSION	1	

FIG.521D

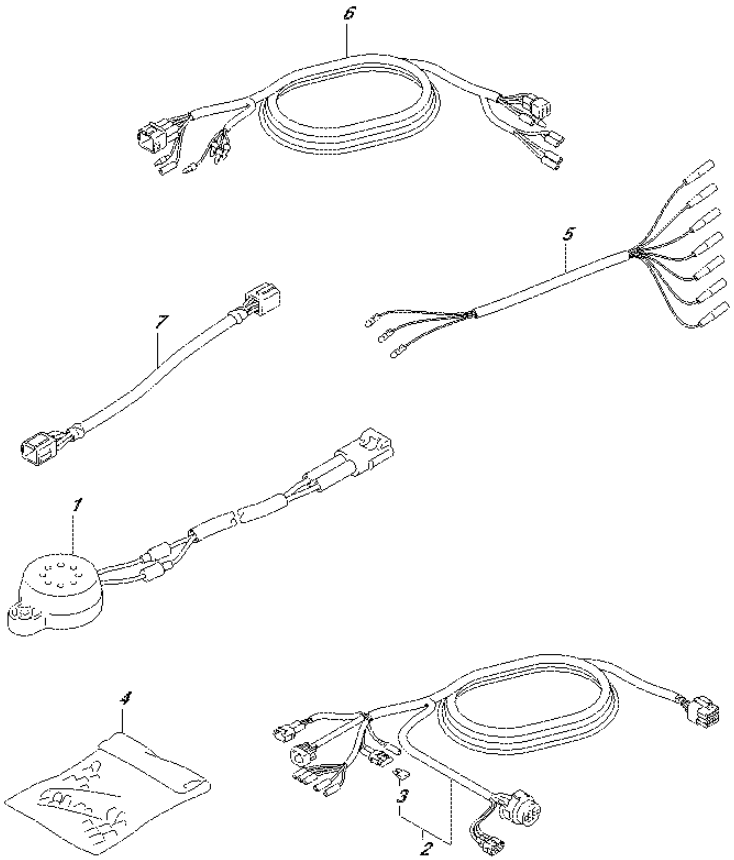

FIG.521D (3-B-10) OPT:HARNESS (DF70ATH E40)

REF NO.	PART NO.	DESCRIPTION	Q'TY	REMARKS
1	38500-93J00	BUZZER ASSY, WARNING	1	
2-1	36620-93J02	WIRE ASSY, REMOTE CONTROL	1	L:5000
2-2	36620-93J52	WIRE ASSY, REMOTE CONTROL	1	L:3500
2-3	36620-93J62	WIRE ASSY, REMOTE CONTROL	1	L:6500
3	09481-10501	.FUSE (10A)	1	
4	36990-87D00	TERMINAL & SLEEVE SET	1	
5	36630-92E00	WIRE ASSY, INSTRUMENT	1	
6	36660-94480	WIRE, MONITOR GAUGE EXTENSION	1	
7	36682-92E00	WIRE, MONITOR GAUGE EXTENSION	1	

FIG.521E

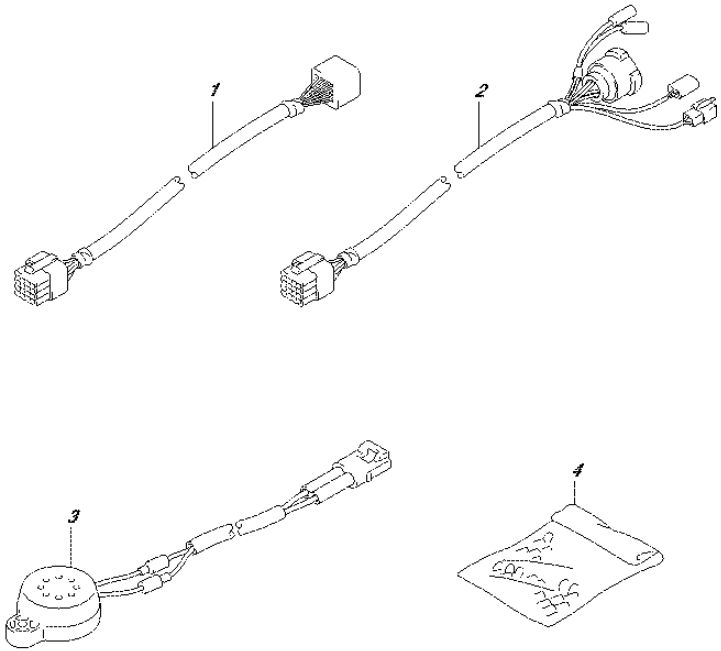

FIG.521E (3-B-11) OPT:HARNESS (DF80A E01)

REF NO.	PART NO.	DESCRIPTION	Q'TY	REMARKS
1-1	36620-93J10	WIRE ASSY, REMOCON EXTENSION	1	L:2000
1-2	36620-93J40	WIRE ASSY, REMOCON EXTENSION	1	L:3000
2	36620-93J30	WIRE ASSY, REMOCON ADAPTER	1	L:2000
3	38500-93J00	BUZZER ASSY, WARNING	1	
4	36990-87D00	TERMINAL & SLEEVE SET	1	

FIG.521F

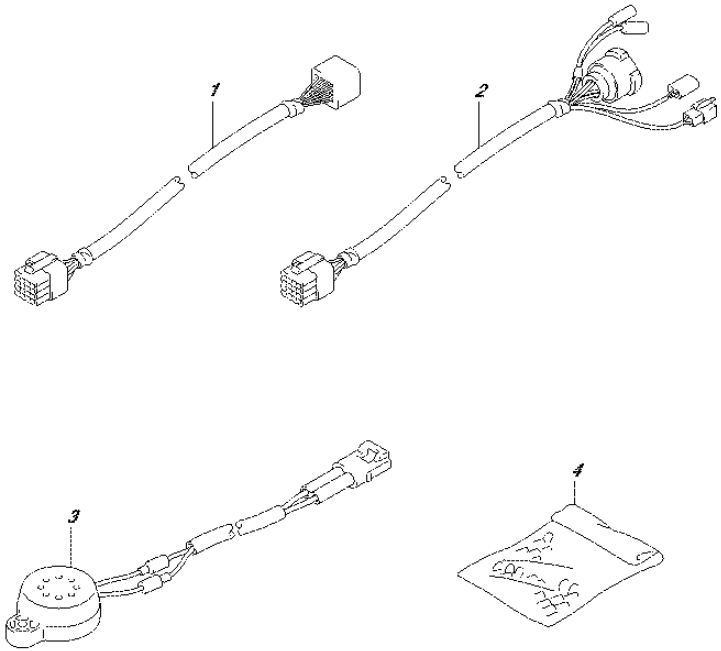

FIG.521F (3-B-12) OPT:HARNESS (DF80A E40)

REF NO.	PART NO.	DESCRIPTION	Q'TY	REMARKS
1-1	36620-93J10	WIRE ASSY, REMOCON EXTENSION	1	L:2000
1-2	36620-93J40	WIRE ASSY, REMOCON EXTENSION	1	L:3000
2	36620-93J30	WIRE ASSY, REMOCON ADAPTER	1	L:2000
3	38500-93J00	BUZZER ASSY, WARNING	1	
4	36990-87D00	TERMINAL & SLEEVE SET	1	

FIG.521G

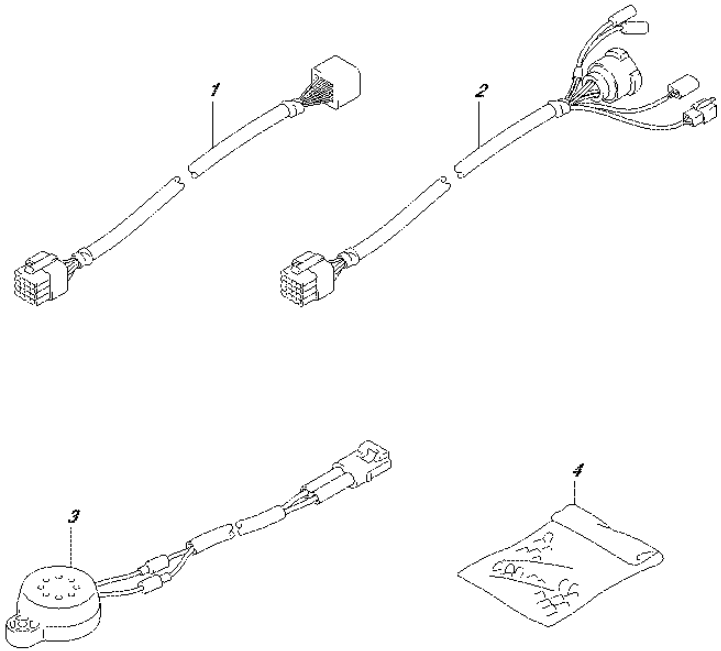

FIG.521G (3-B-13) OPT:HARNESS (DF90A E01)

REF NO.	PART NO.	DESCRIPTION	Q'TY	REMARKS
1-1	36620-93J10	WIRE ASSY, REMOCON EXTENSION	1	L:2000
1-2	36620-93J40	WIRE ASSY, REMOCON EXTENSION	1	L:3000
2	36620-93J30	WIRE ASSY, REMOCON ADAPTER	1	L:2000
3	38500-93J00	BUZZER ASSY, WARNING	1	
4	36990-87D00	TERMINAL & SLEEVE SET	1	

FIG.521H

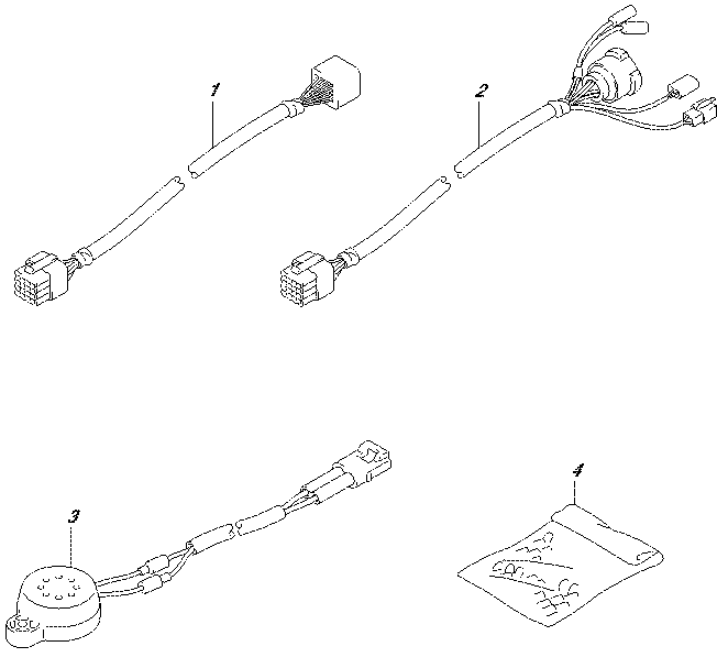

FIG.521H (3-B-14) OPT:HARNESS (DF90A E40)

REF NO.	PART NO.	DESCRIPTION	Q'TY	REMARKS
1-1	36620-93J10	WIRE ASSY, REMOCON EXTENSION	1	L:2000
1-2	36620-93J40	WIRE ASSY, REMOCON EXTENSION	1	L:3000
2	36620-93J30	WIRE ASSY, REMOCON ADAPTER	1	L:2000
3	38500-93J00	BUZZER ASSY, WARNING	1	
4	36990-87D00	TERMINAL & SLEEVE SET	1	

FIG.521J

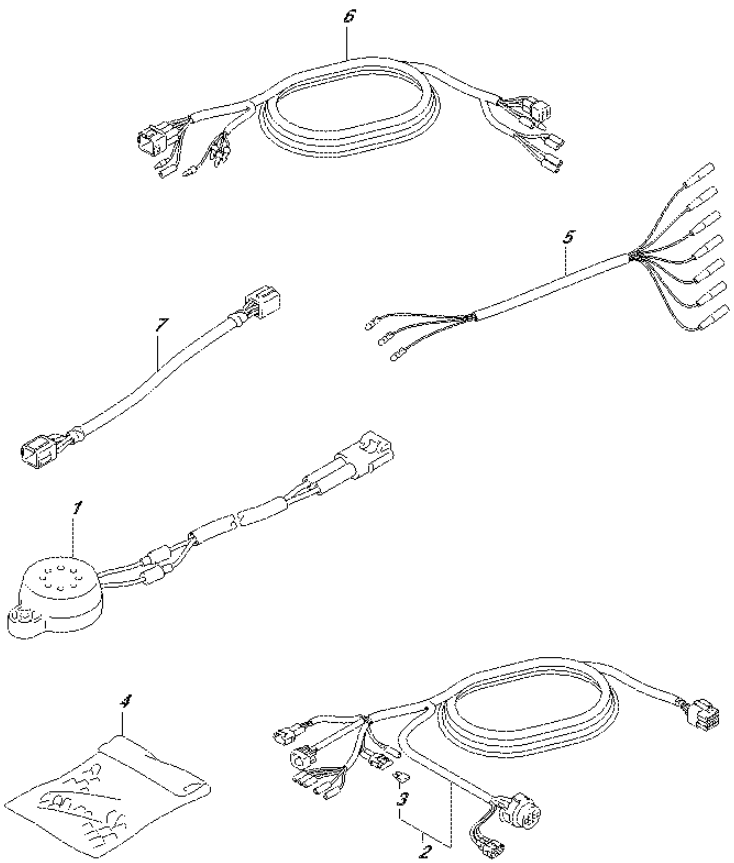

FIG.521J (3-B-15) OPT:HARNESS (DF90ATH E01)

REF NO.	PART NO.	DESCRIPTION	Q'TY	REMARKS
1	38500-93J00	BUZZER ASSY, WARNING	1	
2-1	36620-93J02	WIRE ASSY, REMOTE CONTROL	1	L:5000
2-2	36620-93J52	WIRE ASSY, REMOTE CONTROL	1	L:3500
2-3	36620-93J62	WIRE ASSY, REMOTE CONTROL	1	L:6500
3	09481-10501	.FUSE (10A)	1	
4	36990-87D00	TERMINAL & SLEEVE SET	1	
5	36630-92E00	WIRE ASSY, INSTRUMENT	1	
6	36660-94480	WIRE, MONITOR GAUGE EXTENSION	1	
7	36682-92E00	WIRE, MONITOR GAUGE EXTENSION	1	

FIG.521K

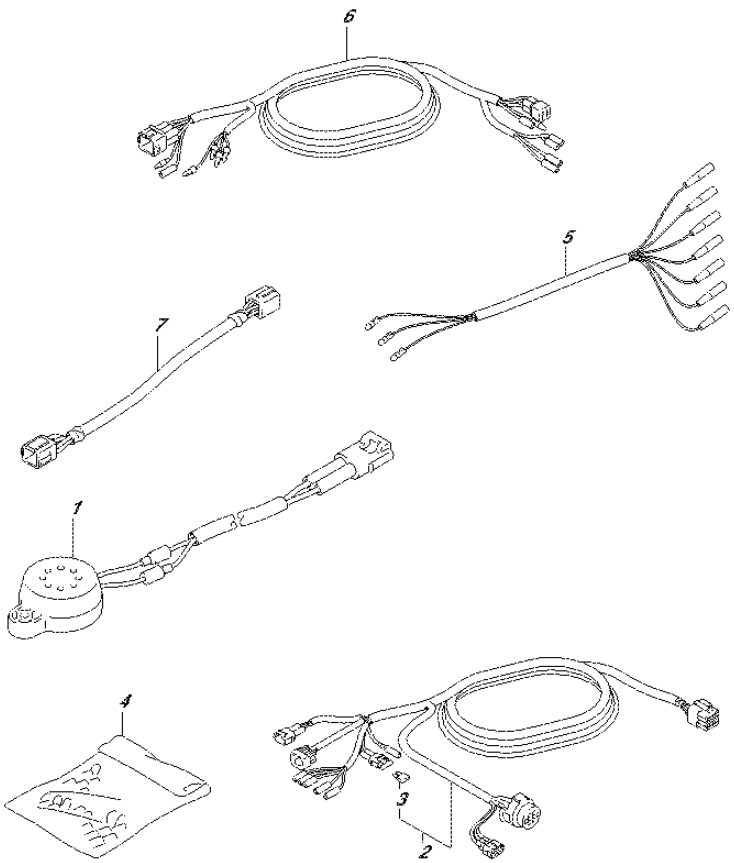

FIG.521K (3-C-2) OPT:HARNESS (DF90ATH E40)

REF NO.	PART NO.	DESCRIPTION	Q'TY	REMARKS
1	38500-93J00	BUZZER ASSY, WARNING	1	
2-1	36620-93J02	WIRE ASSY, REMOTE CONTROL	1	L:5000
2-2	36620-93J52	WIRE ASSY, REMOTE CONTROL	1	L:3500
2-3	36620-93J62	WIRE ASSY, REMOTE CONTROL	1	L:6500
3	09481-10501	.FUSE (10A)	1	
4	36990-87D00	TERMINAL & SLEEVE SET	1	
5	36630-92E00	WIRE ASSY, INSTRUMENT	1	
6	36660-94480	WIRE, MONITOR GAUGE EXTENSION	1	
7	36682-92E00	WIRE, MONITOR GAUGE EXTENSION	1	

FIG.530A

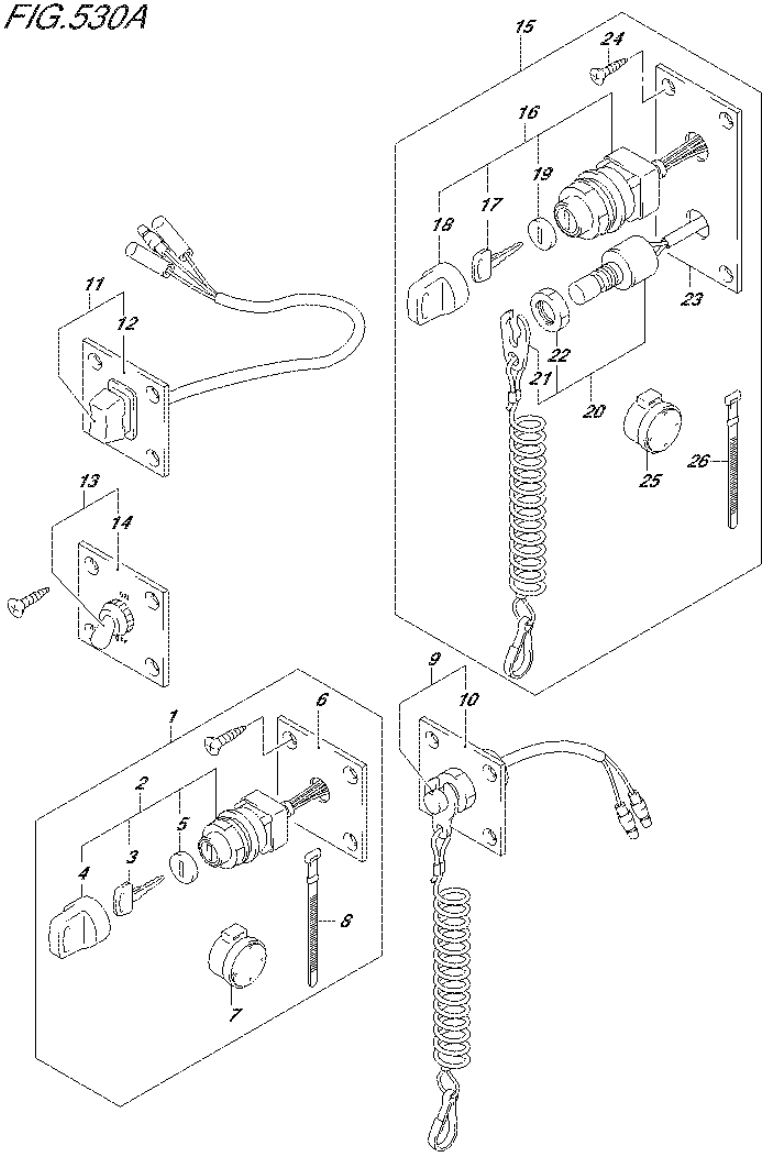

DF90A_E01_015_530A
OPT:SWITCH

FIG.530A (3-C-3) OPT:SWITCH (DF70A E01)

REF NO.	PART NO.	DESCRIPTION	Q'TY	REMARKS
1	37100-96J00	PANEL ASSY, IGNITION SW	1	
2	37110-93J01	.SWITCH ASSY, IGNITION	1	
3-1	37141-99E00	..KEY (931)	2	
3-2	37141-99E10	..KEY (932)	2	
3-3	37141-99E20	..KEY (933)	2	
3-4	37141-99E30	..KEY (934)	2	
3-5	37141-99E40	..KEY (935)	2	
3-6	37141-99E50	..KEY (936)	2	
3-7	37141-99E60	..KEY (937)	2	
3-8	37141-99E70	..KEY (938)	2	
3-9	37141-99E80	..KEY (939)	2	
3-10	37141-99E90	..KEY (940)	2	
3-11	37141-99EA0	..KEY (941)	2	
3-12	37141-99EB0	..KEY (942)	2	
4	37143-99E00	..CAP, KEY	1	
5	37149-93J00	..CAP, CYLINDER BODY	1	
6	37139-99E00	.PANEL, IGNITION SW	1	
7	38500-93J90	.BUZZER ASSY, WARNING	1	
8	09407-08401	.CLAMP (L:80)	1	
9	37803-93J04	PANEL ASSY, EMERGENCY SW	1	
10	37825-99E00	.PANEL, EMERGENCY SW	1	
11	37805-93J00	PANEL ASSY, PTT SW	1	
12	37855-99E00	.PANEL, PTT SW	1	
13	37210-93J00	PANEL ASSY, LIGHTING SW	1	
14	37212-93J00	.PANEL, LIGHTING SW	1	
15	37100-96J24	PANEL ASSY, ENGINE SW	1	
16	37110-93J01	.SWITCH ASSY, IGNITION	1	
17-1	37141-99E00	..KEY (931)	2	
17-2	37141-99E10	..KEY (932)	2	
17-3	37141-99E20	..KEY (933)	2	
17-4	37141-99E30	..KEY (934)	2	
17-5	37141-99E40	..KEY (935)	2	
17-6	37141-99E50	..KEY (936)	2	
17-7	37141-99E60	..KEY (937)	2	

FIG.530A

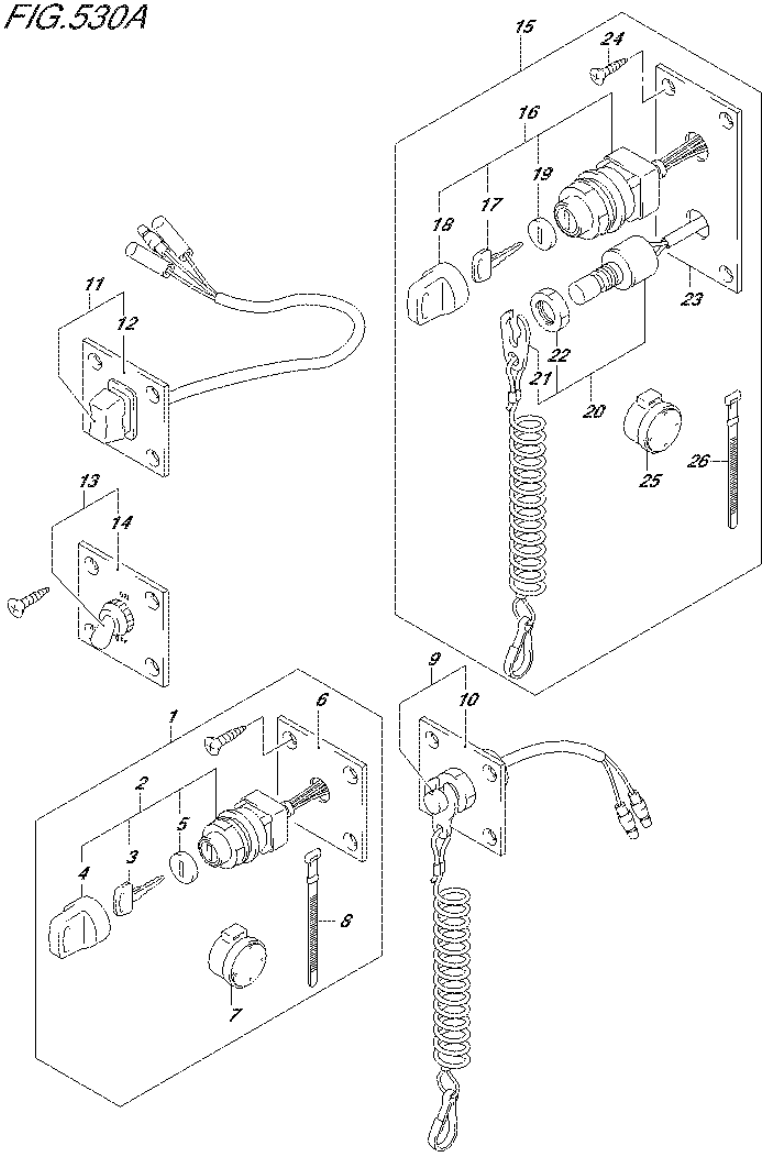

DF90A_E01_015_530A
OPT:SWITCH

FIG.530A (3-C-4) OPT:SWITCH (DF70A E01)

REF NO.	PART NO.	DESCRIPTION	Q'TY	REMARKS
17-8	37141-99E70	..KEY (938)	2	
17-9	37141-99E80	..KEY (939)	2	
17-10	37141-99E90	..KEY (940)	2	
17-11	37141-99EA0	..KEY (941)	2	
17-12	37141-99EB0	..KEY (942)	2	
18	37143-99E00	..CAP, KEY	1	
19	37149-93J00	..CAP, CYLINDER BODY	1	
20	37820-93J04	.SWITCH ASSY, EMERGENCY	1	
21	37823-92E01	..PLATE ASSY, EMERGENCY SW LOCK	1	
22	37826-92J00	..NUT	1	
23	37139-99E20	.PANEL	1	
24	03121-0516A	.SCREW	4	
25	38500-93J90	.BUZZER ASSY, WARNING	1	
26	09407-08401	.CLAMP (L:80)	1	@

FIG.530B

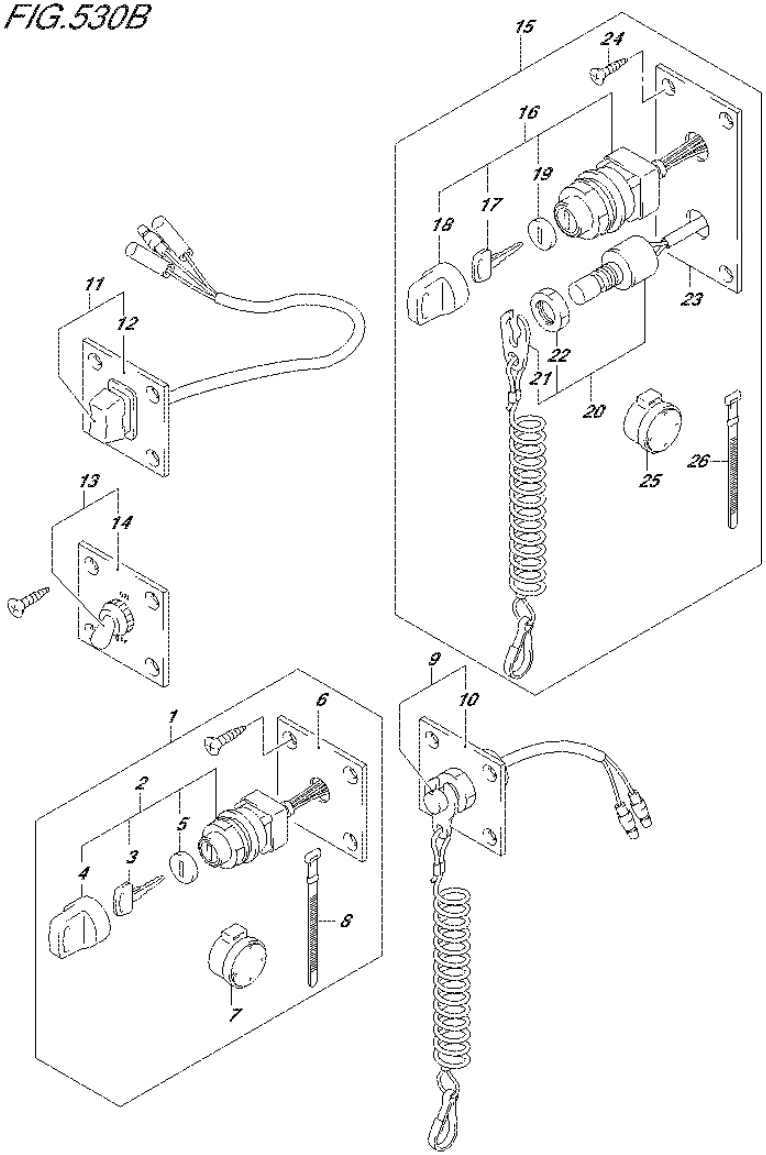

DF90A_E01_015_530B
OPT:SWITCH

FIG.530B (3-C-5) OPT:SWITCH (DF70A E40)

REF NO.	PART NO.	DESCRIPTION	Q'TY	REMARKS
1	37100-96J00	PANEL ASSY, IGNITION SW	1	
2	37110-93J01	.SWITCH ASSY, IGNITION	1	
3-1	37141-99E00	..KEY (931)	2	
3-2	37141-99E10	..KEY (932)	2	
3-3	37141-99E20	..KEY (933)	2	
3-4	37141-99E30	..KEY (934)	2	
3-5	37141-99E40	..KEY (935)	2	
3-6	37141-99E50	..KEY (936)	2	
3-7	37141-99E60	..KEY (937)	2	
3-8	37141-99E70	..KEY (938)	2	
3-9	37141-99E80	..KEY (939)	2	
3-10	37141-99E90	..KEY (940)	2	
3-11	37141-99EA0	..KEY (941)	2	
3-12	37141-99EB0	..KEY (942)	2	
4	37143-99E00	..CAP, KEY	1	
5	37149-93J00	..CAP, CYLINDER BODY	1	
6	37139-99E00	.PANEL, IGNITION SW	1	
7	38500-93J90	.BUZZER ASSY, WARNING	1	
8	09407-08401	.CLAMP (L:80)	1	
9	37803-93J04	PANEL ASSY, EMERGENCY SW	1	
10	37825-99E00	.PANEL, EMERGENCY SW	1	
11	37805-93J00	PANEL ASSY, PTT SW	1	
12	37855-99E00	.PANEL, PTT SW	1	
13	37210-93J00	PANEL ASSY, LIGHTING SW	1	
14	37212-93J00	.PANEL, LIGHTING SW	1	
15	37100-96J24	PANEL ASSY, ENGINE SW	1	
16	37110-93J01	.SWITCH ASSY, IGNITION	1	
17-1	37141-99E00	..KEY (931)	2	
17-2	37141-99E10	..KEY (932)	2	
17-3	37141-99E20	..KEY (933)	2	
17-4	37141-99E30	..KEY (934)	2	
17-5	37141-99E40	..KEY (935)	2	
17-6	37141-99E50	..KEY (936)	2	
17-7	37141-99E60	..KEY (937)	2	

FIG.530B

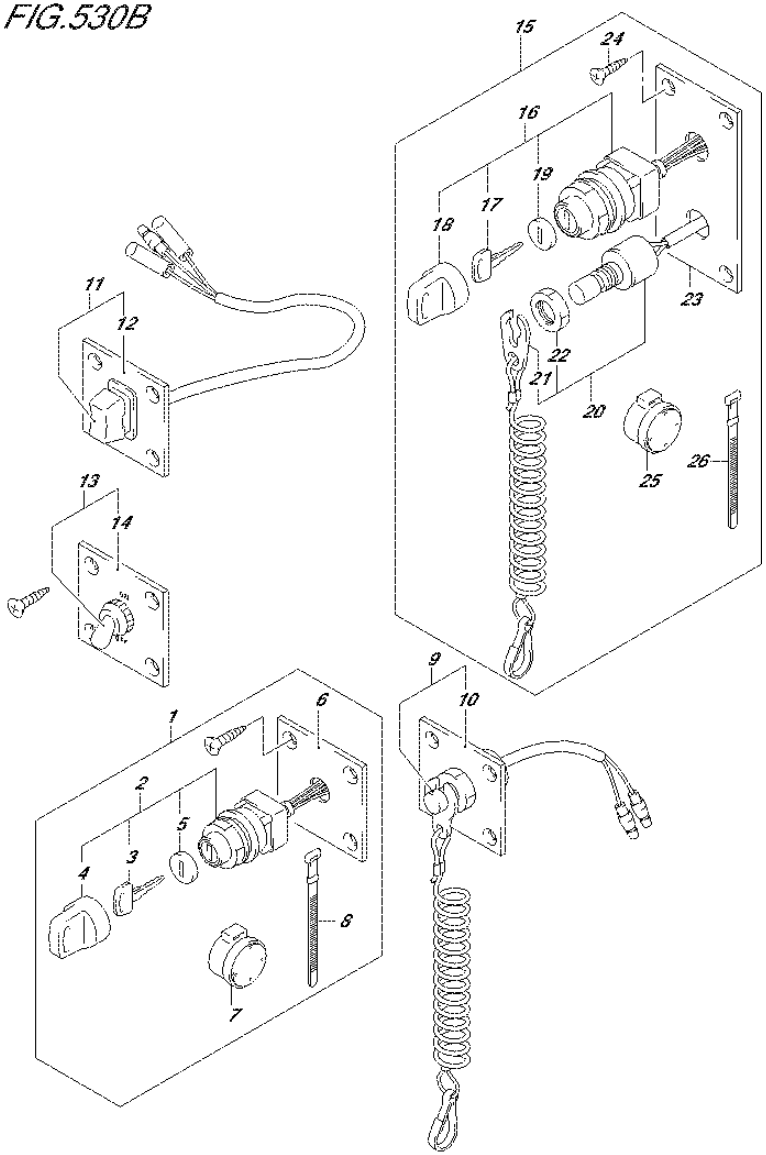

DF90A_E01_015_530B
OPT:SWITCH

FIG.530B (3-C-6) OPT:SWITCH (DF70A E40)

REF NO.	PART NO.	DESCRIPTION	Q'TY	REMARKS
17-8	37141-99E70	..KEY (938)	2	
17-9	37141-99E80	..KEY (939)	2	
17-10	37141-99E90	..KEY (940)	2	
17-11	37141-99EA0	..KEY (941)	2	
17-12	37141-99EB0	..KEY (942)	2	
18	37143-99E00	..CAP, KEY	1	
19	37149-93J00	..CAP, CYLINDER BODY	1	
20	37820-93J04	.SWITCH ASSY, EMERGENCY	1	
21	37823-92E01	..PLATE ASSY, EMERGENCY SW LOCK	1	
22	37826-92J00	..NUT	1	
23	37139-99E20	.PANEL	1	
24	03121-0516A	.SCREW	4	
25	38500-93J90	.BUZZER ASSY, WARNING	1	
26	09407-08401	.CLAMP (L:80)	1	

FIG.530C

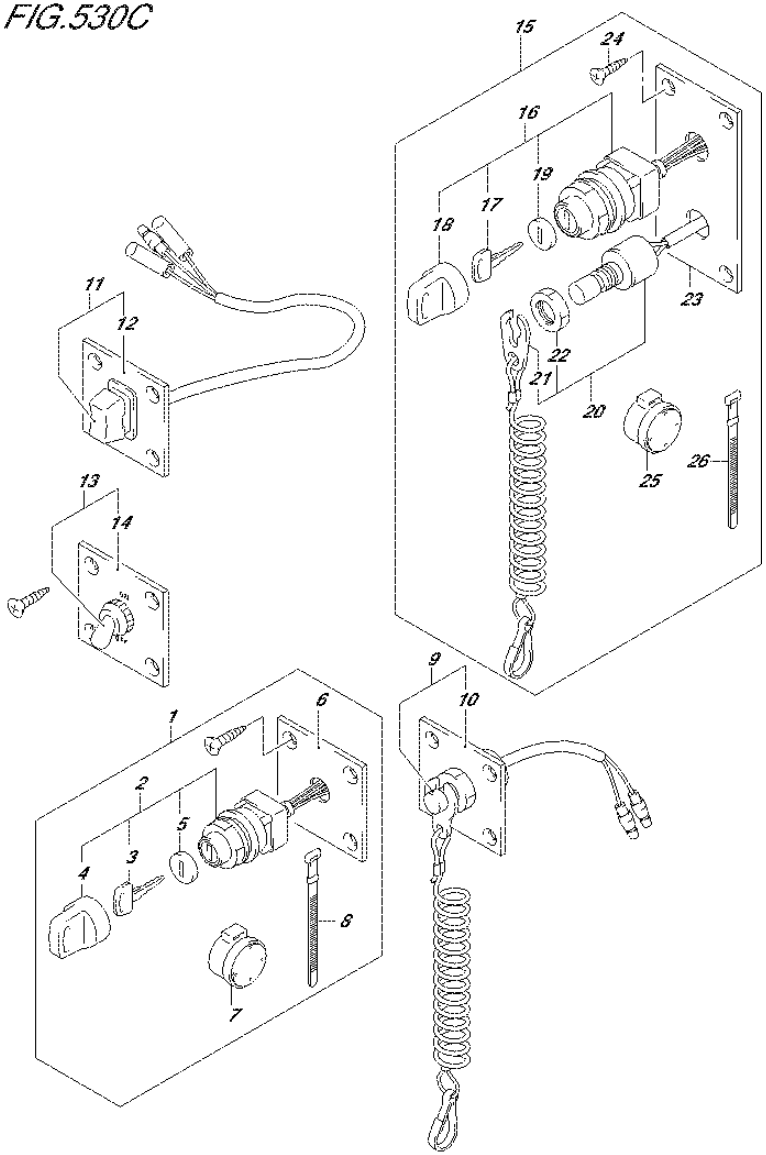

DF90A_E01_015_530C
OPT:SWITCH

FIG.530C (3-C-7) OPT:SWITCH (DF80A E01)

REF NO.	PART NO.	DESCRIPTION	Q'TY	REMARKS
1	37100-96J00	PANEL ASSY, IGNITION SW	1	
2	37110-93J01	.SWITCH ASSY, IGNITION	1	
3-1	37141-99E00	..KEY (931)	2	
3-2	37141-99E10	..KEY (932)	2	
3-3	37141-99E20	..KEY (933)	2	
3-4	37141-99E30	..KEY (934)	2	
3-5	37141-99E40	..KEY (935)	2	
3-6	37141-99E50	..KEY (936)	2	
3-7	37141-99E60	..KEY (937)	2	
3-8	37141-99E70	..KEY (938)	2	
3-9	37141-99E80	..KEY (939)	2	
3-10	37141-99E90	..KEY (940)	2	
3-11	37141-99EA0	..KEY (941)	2	
3-12	37141-99EB0	..KEY (942)	2	
4	37143-99E00	..CAP, KEY	1	
5	37149-93J00	..CAP, CYLINDER BODY	1	
6	37139-99E00	.PANEL, IGNITION SW	1	
7	38500-93J90	.BUZZER ASSY, WARNING	1	
8	09407-08401	.CLAMP (L:80)	1	
9	37803-93J04	PANEL ASSY, EMERGENCY SW	1	
10	37825-99E00	.PANEL, EMERGENCY SW	1	
11	37805-93J00	PANEL ASSY, PTT SW	1	
12	37855-99E00	.PANEL, PTT SW	1	
13	37210-93J00	PANEL ASSY, LIGHTING SW	1	
14	37212-93J00	.PANEL, LIGHTING SW	1	
15	37100-96J24	PANEL ASSY, ENGINE SW	1	
16	37110-93J01	.SWITCH ASSY, IGNITION	1	
17-1	37141-99E00	..KEY (931)	2	
17-2	37141-99E10	..KEY (932)	2	
17-3	37141-99E20	..KEY (933)	2	
17-4	37141-99E30	..KEY (934)	2	
17-5	37141-99E40	..KEY (935)	2	
17-6	37141-99E50	..KEY (936)	2	
17-7	37141-99E60	..KEY (937)	2	

FIG.530C

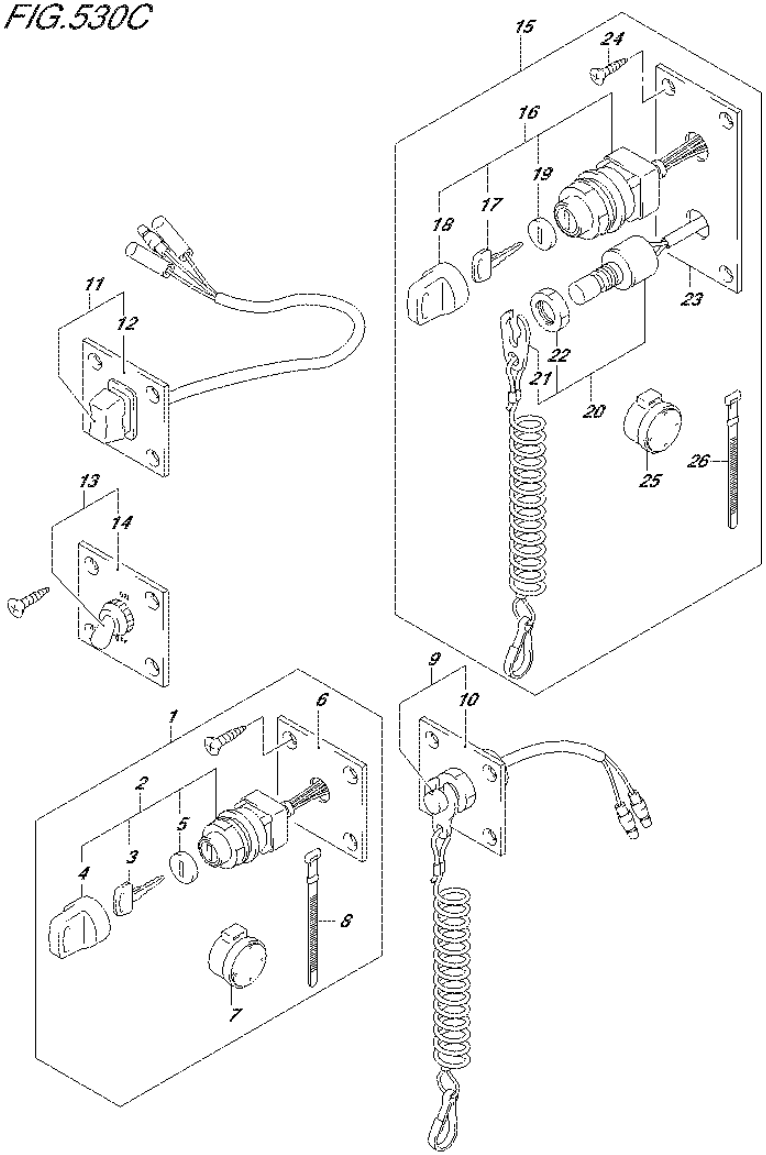

DF90A_E01_015_530C
OPT:SWITCH

FIG.530C (3-C-8) OPT:SWITCH (DF80A E01)

REF NO.	PART NO.	DESCRIPTION	Q'TY	REMARKS
17-8	37141-99E70	..KEY (938)	2	
17-9	37141-99E80	..KEY (939)	2	
17-10	37141-99E90	..KEY (940)	2	
17-11	37141-99EA0	..KEY (941)	2	
17-12	37141-99EB0	..KEY (942)	2	
18	37143-99E00	..CAP, KEY	1	
19	37149-93J00	..CAP, CYLINDER BODY	1	
20	37820-93J04	.SWITCH ASSY, EMERGENCY	1	
21	37823-92E01	..PLATE ASSY, EMERGENCY SW LOCK	1	
22	37826-92J00	..NUT	1	
23	37139-99E20	.PANEL	1	
24	03121-0516A	.SCREW	4	
25	38500-93J90	.BUZZER ASSY, WARNING	1	
26	09407-08401	.CLAMP (L:80)	1	

FIG.530D

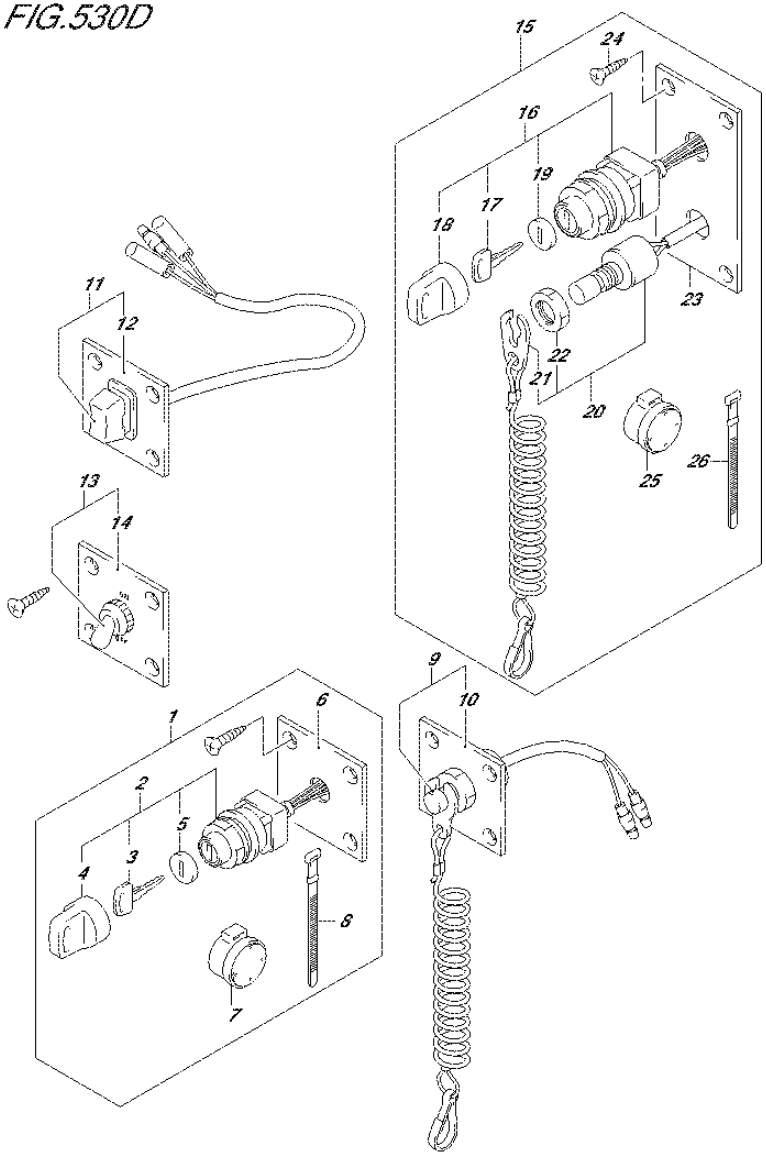

DF90A_E01_015_530D
OPT:SWITCH

FIG.530D (3-C-9) OPT:SWITCH (DF80A E40)

REF NO.	PART NO.	DESCRIPTION	Q'TY	REMARKS
1	37100-96J00	PANEL ASSY, IGNITION SW	1	
2	37110-93J01	.SWITCH ASSY, IGNITION	1	
3-1	37141-99E00	..KEY (931)	2	
3-2	37141-99E10	..KEY (932)	2	
3-3	37141-99E20	..KEY (933)	2	
3-4	37141-99E30	..KEY (934)	2	
3-5	37141-99E40	..KEY (935)	2	
3-6	37141-99E50	..KEY (936)	2	
3-7	37141-99E60	..KEY (937)	2	
3-8	37141-99E70	..KEY (938)	2	
3-9	37141-99E80	..KEY (939)	2	
3-10	37141-99E90	..KEY (940)	2	
3-11	37141-99EA0	..KEY (941)	2	
3-12	37141-99EB0	..KEY (942)	2	
4	37143-99E00	..CAP, KEY	1	
5	37149-93J00	..CAP, CYLINDER BODY	1	
6	37139-99E00	.PANEL, IGNITION SW	1	
7	38500-93J90	.BUZZER ASSY, WARNING	1	
8	09407-08401	.CLAMP (L:80)	1	
9	37803-93J04	PANEL ASSY, EMERGENCY SW	1	
10	37825-99E00	.PANEL, EMERGENCY SW	1	
11	37805-93J00	PANEL ASSY, PTT SW	1	
12	37855-99E00	.PANEL, PTT SW	1	
13	37210-93J00	PANEL ASSY, LIGHTING SW	1	
14	37212-93J00	.PANEL, LIGHTING SW	1	
15	37100-96J24	PANEL ASSY, ENGINE SW	1	
16	37110-93J01	.SWITCH ASSY, IGNITION	1	
17-1	37141-99E00	..KEY (931)	2	
17-2	37141-99E10	..KEY (932)	2	
17-3	37141-99E20	..KEY (933)	2	
17-4	37141-99E30	..KEY (934)	2	
17-5	37141-99E40	..KEY (935)	2	
17-6	37141-99E50	..KEY (936)	2	
17-7	37141-99E60	..KEY (937)	2	

FIG.530D

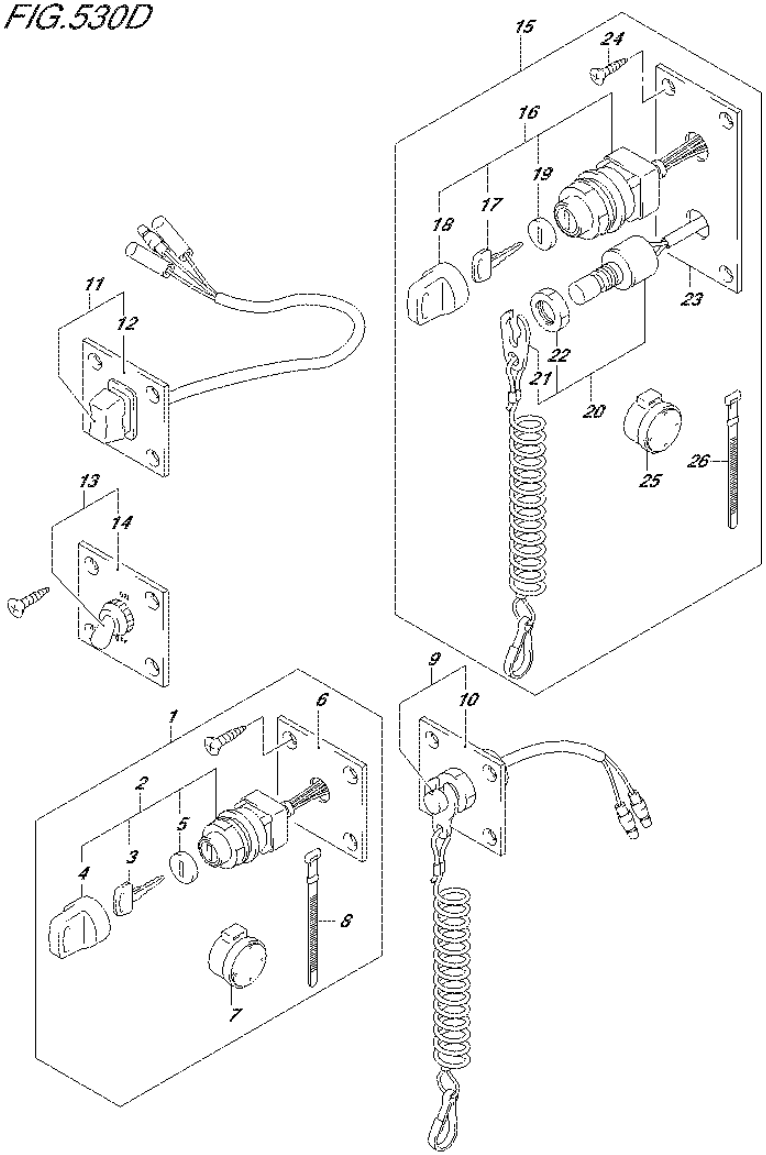

DF90A_E01_015_530D
OPT:SWITCH

FIG.530D (3-C-10) OPT:SWITCH (DF80A E40)

REF NO.	PART NO.	DESCRIPTION	Q'TY	REMARKS
17-8	37141-99E70	..KEY (938)	2	
17-9	37141-99E80	..KEY (939)	2	
17-10	37141-99E90	..KEY (940)	2	
17-11	37141-99EA0	..KEY (941)	2	
17-12	37141-99EB0	..KEY (942)	2	
18	37143-99E00	..CAP, KEY	1	
19	37149-93J00	..CAP, CYLINDER BODY	1	
20	37820-93J04	.SWITCH ASSY, EMERGENCY	1	
21	37823-92E01	..PLATE ASSY, EMERGENCY SW LOCK	1	
22	37826-92J00	..NUT	1	
23	37139-99E20	.PANEL	1	
24	03121-0516A	.SCREW	4	
25	38500-93J90	.BUZZER ASSY, WARNING	1	
26	09407-08401	.CLAMP (L:80)	1	

FIG.530E

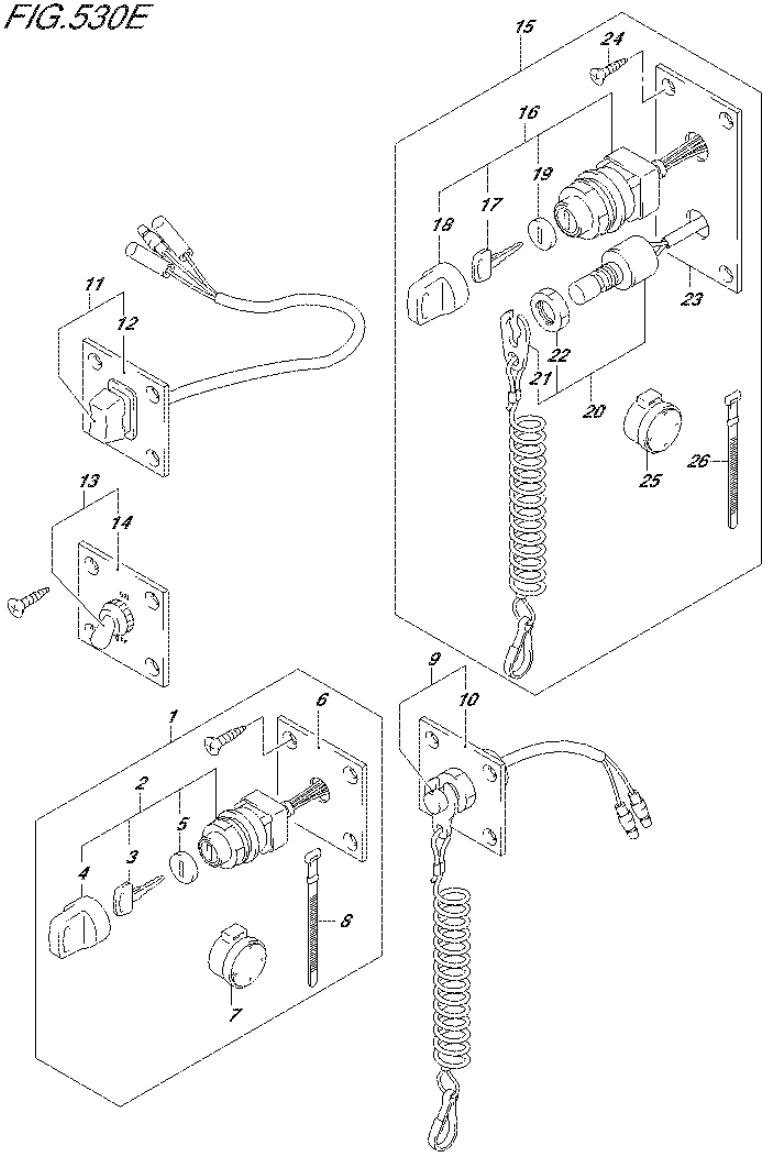

DF90A_E01_015_530E
OPT:SWITCH

FIG.530E (3-C-11) OPT:SWITCH (DF90A E01)

REF NO.	PART NO.	DESCRIPTION	Q'TY	REMARKS
1	37100-96J00	PANEL ASSY, IGNITION SW	1	
2	37110-93J01	.SWITCH ASSY, IGNITION	1	
3-1	37141-99E00	..KEY (931)	2	
3-2	37141-99E10	..KEY (932)	2	
3-3	37141-99E20	..KEY (933)	2	
3-4	37141-99E30	..KEY (934)	2	
3-5	37141-99E40	..KEY (935)	2	
3-6	37141-99E50	..KEY (936)	2	
3-7	37141-99E60	..KEY (937)	2	
3-8	37141-99E70	..KEY (938)	2	
3-9	37141-99E80	..KEY (939)	2	
3-10	37141-99E90	..KEY (940)	2	
3-11	37141-99EA0	..KEY (941)	2	
3-12	37141-99EB0	..KEY (942)	2	
4	37143-99E00	..CAP, KEY	1	
5	37149-93J00	..CAP, CYLINDER BODY	1	
6	37139-99E00	.PANEL, IGNITION SW	1	
7	38500-93J90	.BUZZER ASSY, WARNING	1	
8	09407-08401	.CLAMP (L:80)	1	
9	37803-93J04	PANEL ASSY, EMERGENCY SW	1	
10	37825-99E00	.PANEL, EMERGENCY SW	1	
11	37805-93J00	PANEL ASSY, PTT SW	1	
12	37855-99E00	.PANEL, PTT SW	1	
13	37210-93J00	PANEL ASSY, LIGHTING SW	1	
14	37212-93J00	.PANEL, LIGHTING SW	1	
15	37100-96J24	PANEL ASSY, ENGINE SW	1	
16	37110-93J01	.SWITCH ASSY, IGNITION	1	
17-1	37141-99E00	..KEY (931)	2	
17-2	37141-99E10	..KEY (932)	2	
17-3	37141-99E20	..KEY (933)	2	
17-4	37141-99E30	..KEY (934)	2	
17-5	37141-99E40	..KEY (935)	2	
17-6	37141-99E50	..KEY (936)	2	
17-7	37141-99E60	..KEY (937)	2	

FIG.530E

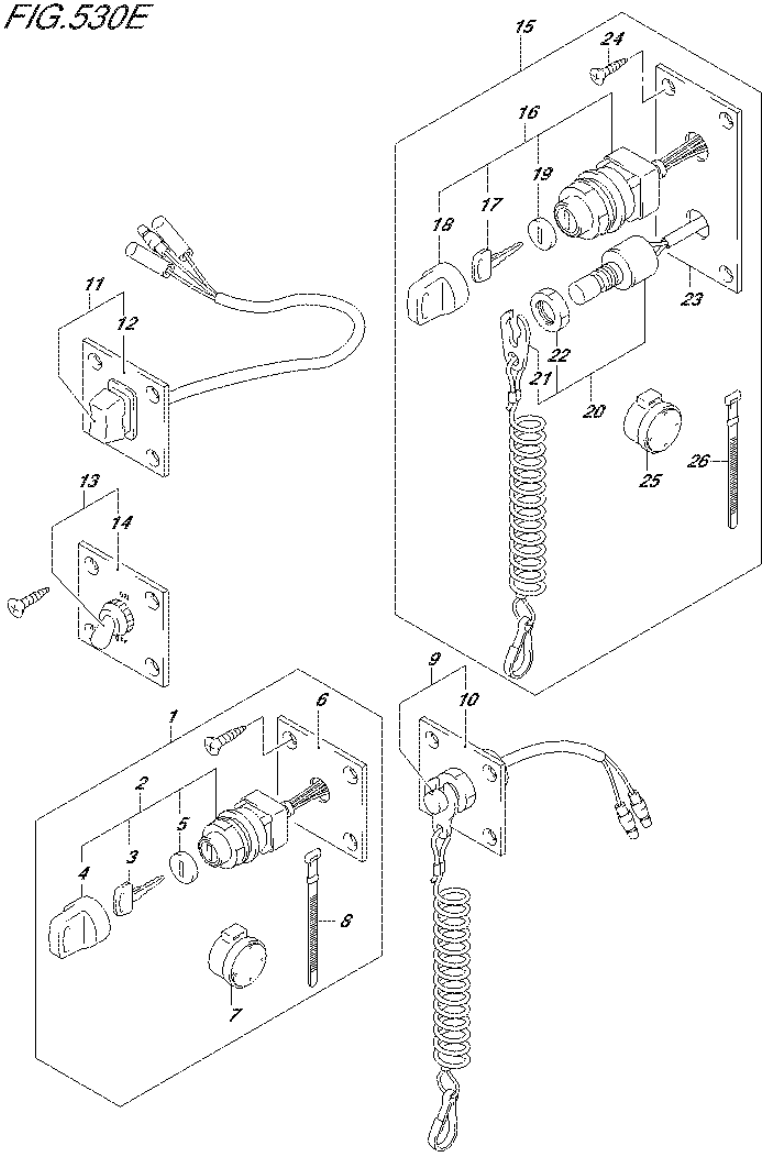

DF90A_E01_015_530E
OPT:SWITCH

FIG.530E (3-C-12) OPT:SWITCH (DF90A E01)

REF NO.	PART NO.	DESCRIPTION	Q'TY	REMARKS
17-8	37141-99E70	..KEY (938)	2	
17-9	37141-99E80	..KEY (939)	2	
17-10	37141-99E90	..KEY (940)	2	
17-11	37141-99EA0	..KEY (941)	2	
17-12	37141-99EB0	..KEY (942)	2	
18	37143-99E00	..CAP, KEY	1	
19	37149-93J00	..CAP, CYLINDER BODY	1	
20	37820-93J04	.SWITCH ASSY, EMERGENCY	1	
21	37823-92E01	..PLATE ASSY, EMERGENCY SW LOCK	1	
22	37826-92J00	..NUT	1	
23	37139-99E20	.PANEL	1	
24	03121-0516A	.SCREW	4	
25	38500-93J90	.BUZZER ASSY, WARNING	1	
26	09407-08401	.CLAMP (L:80)	1	

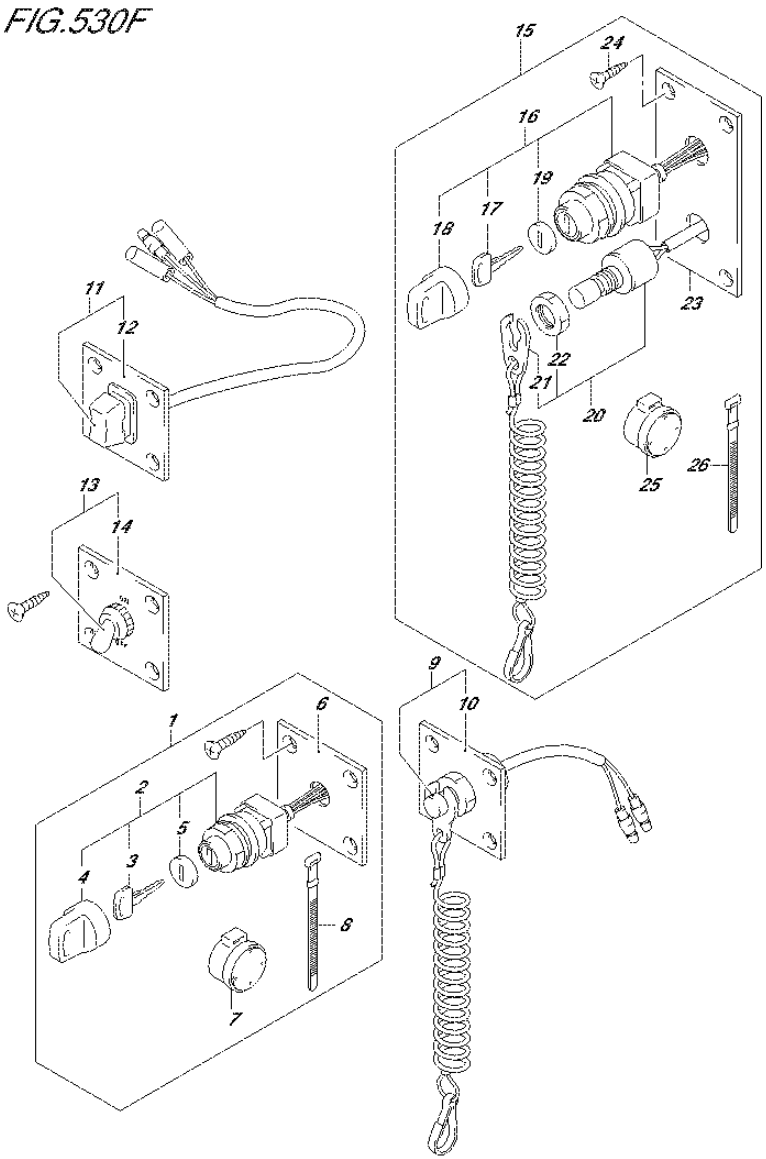

FIG.530F (3-C-13) OPT:SWITCH (DF90A E40)

REF NO.	PART NO.	DESCRIPTION	Q'TY	REMARKS
1	37100-96J00	PANEL ASSY, IGNITION SW	1	
2	37110-93J01	.SWITCH ASSY, IGNITION	1	
3-1	37141-99E00	..KEY (931)	2	
3-2	37141-99E10	..KEY (932)	2	
3-3	37141-99E20	..KEY (933)	2	
3-4	37141-99E30	..KEY (934)	2	
3-5	37141-99E40	..KEY (935)	2	
3-6	37141-99E50	..KEY (936)	2	
3-7	37141-99E60	..KEY (937)	2	
3-8	37141-99E70	..KEY (938)	2	
3-9	37141-99E80	..KEY (939)	2	
3-10	37141-99E90	..KEY (940)	2	
3-11	37141-99EA0	..KEY (941)	2	
3-12	37141-99EB0	..KEY (942)	2	
4	37143-99E00	..CAP, KEY	1	
5	37149-93J00	..CAP, CYLINDER BODY	1	
6	37139-99E00	.PANEL, IGNITION SW	1	
7	38500-93J90	.BUZZER ASSY, WARNING	1	
8	09407-08401	.CLAMP (L:80)	1	
9	37803-93J04	PANEL ASSY, EMERGENCY SW	1	
10	37825-99E00	.PANEL, EMERGENCY SW	1	
11	37805-93J00	PANEL ASSY, PTT SW	1	
12	37855-99E00	.PANEL, PTT SW	1	
13	37210-93J00	PANEL ASSY, LIGHTING SW	1	
14	37212-93J00	.PANEL, LIGHTING SW	1	
15	37100-96J24	PANEL ASSY, ENGINE SW	1	
16	37110-93J01	.SWITCH ASSY, IGNITION	1	
17-1	37141-99E00	..KEY (931)	2	
17-2	37141-99E10	..KEY (932)	2	
17-3	37141-99E20	..KEY (933)	2	
17-4	37141-99E30	..KEY (934)	2	
17-5	37141-99E40	..KEY (935)	2	
17-6	37141-99E50	..KEY (936)	2	
17-7	37141-99E60	..KEY (937)	2	

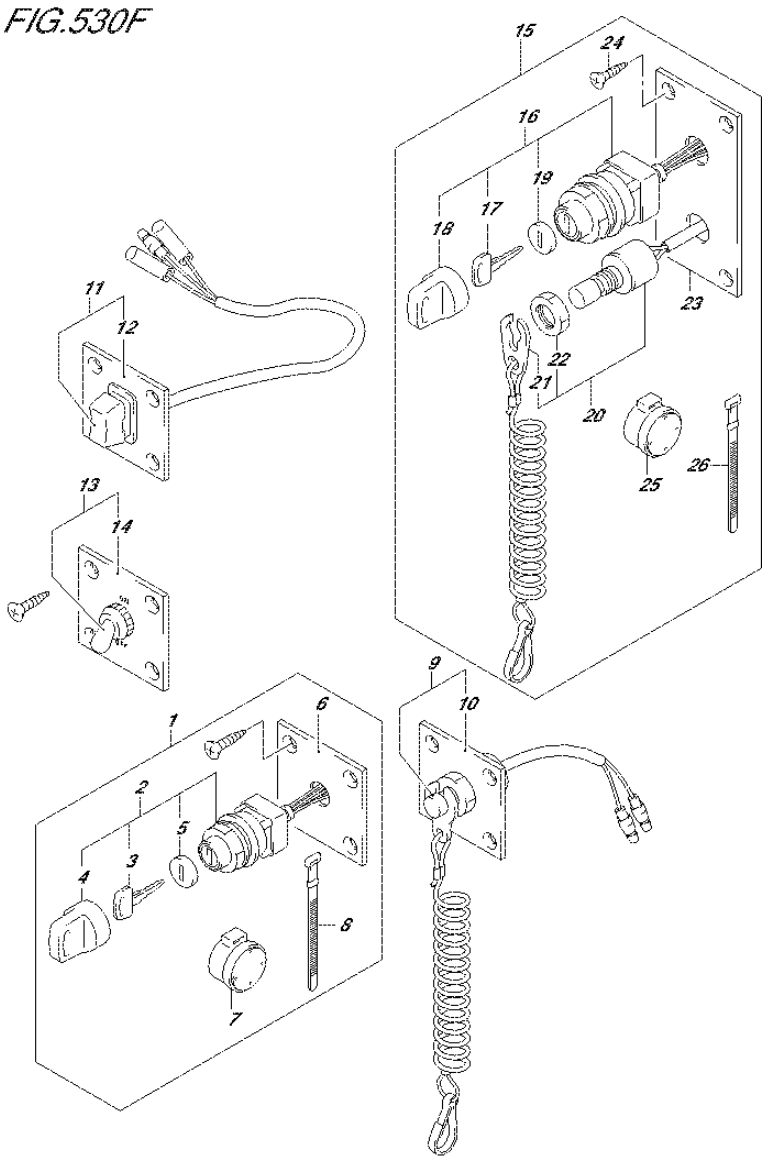

FIG.530F (3-C-14) OPT:SWITCH (DF90A E40)

REF NO.	PART NO.	DESCRIPTION	Q'TY	REMARKS
17-8	37141-99E70	..KEY (938)	2	
17-9	37141-99E80	..KEY (939)	2	
17-10	37141-99E90	..KEY (940)	2	
17-11	37141-99EA0	..KEY (941)	2	
17-12	37141-99EB0	..KEY (942)	2	
18	37143-99E00	..CAP, KEY	1	
19	37149-93J00	..CAP, CYLINDER BODY	1	
20	37820-93J04	.SWITCH ASSY, EMERGENCY	1	
21	37823-92E01	..PLATE ASSY, EMERGENCY SW LOCK	1	
22	37826-92J00	..NUT	1	
23	37139-99E20	.PANEL	1	
24	03121-0516A	.SCREW	4	
25	38500-93J90	.BUZZER ASSY, WARNING	1	
26	09407-08401	.CLAMP (L:80)	1	

FIG.544A

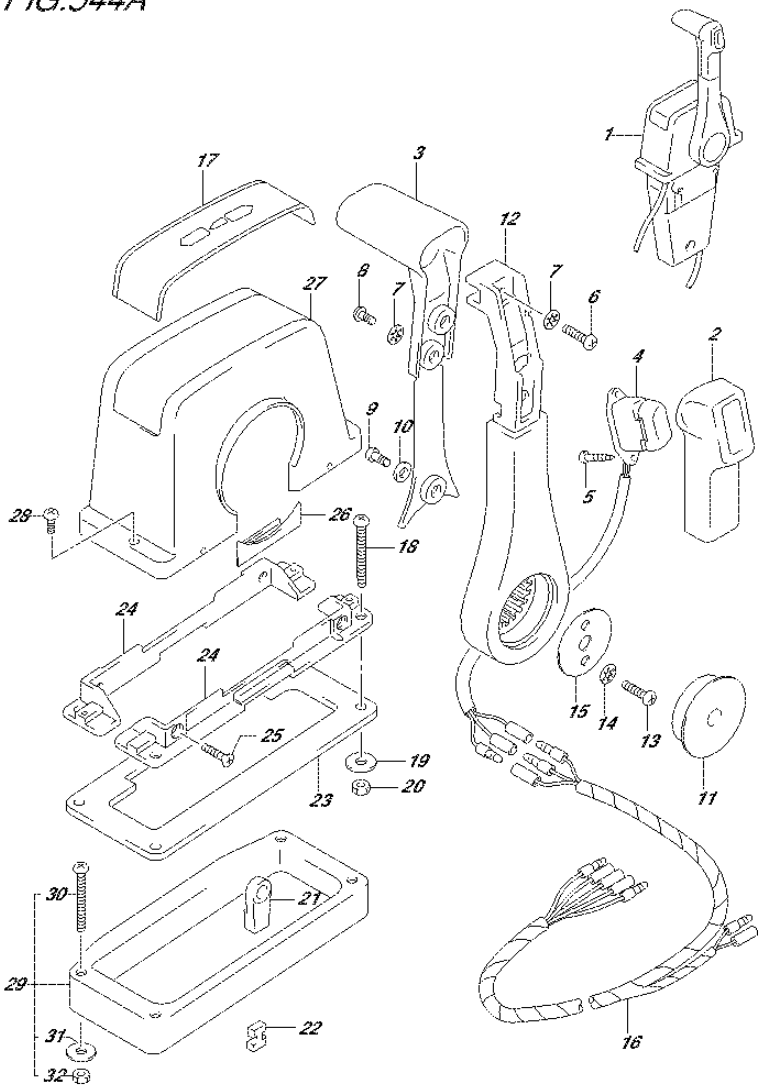

FIG.544A (3-C-15) OPT:REMOTE CONTROL ASSY SINGLE (1) (DF70A E01)

REF NO.	PART NO.	DESCRIPTION	Q'TY	REMARKS
1	67200-93J13	REMOTE CONTROL ASSY	1	
2	67261-93J00	.GRIP, NO.1	1	
3	67263-93J00	.GRIP, NO.2	1	
4	37850-93J10	.SWITCH ASSY, PTT	1	
5	67295-92E10	.SCREW	2	
6	67296-88D10	.SCREW	1	
7	67288-92E20	.WASHER	3	
8	67295-92E00	.SCREW	2	
9	67296-92E70	.SCREW	1	
10	67288-92E40	.WASHER	1	
11	67257-92E00	.CAP, LEVER	1	
12	67251-93J00	.LEVER, HANDLE	1	
13	67296-92E60	.SCREW	2	
14	67288-92E30	.WASHER	2	
15	67253-92E00	.WASHER	1	
16	36890-93J00	.WIRE, NEUTRAL & PTT SW	1	
17	67281-93J00	.DECAL	1	
18	67296-92E30	.SCREW	4	
19	09160-05024	.WASHER (5.5X16X1.5)	4	
20	67287-92E00	.NUT	4	
21	67275-95600	.END, CABLE	2	
22	67273-95600	.SPACER	1	
23	67273-92E00	.GROMMET	1	
24	67274-92E00	.FLANGE	2	
25	67296-95610	.SCREW	4	
26	67271-92E00	.COVER	1	
27	67211-93J00	.COVER	1	
28	67296-92E70	.SCREW	2	
29	67500-93J00	KIT, REMOCON SPACER SINGLE	1	
30	09125-05135	.SCREW (5X65)	4	
31	09160-05029	.WASHER (5.5X12X0.8)	4	
32	09140-05005	.NUT	4	

FIG.544B

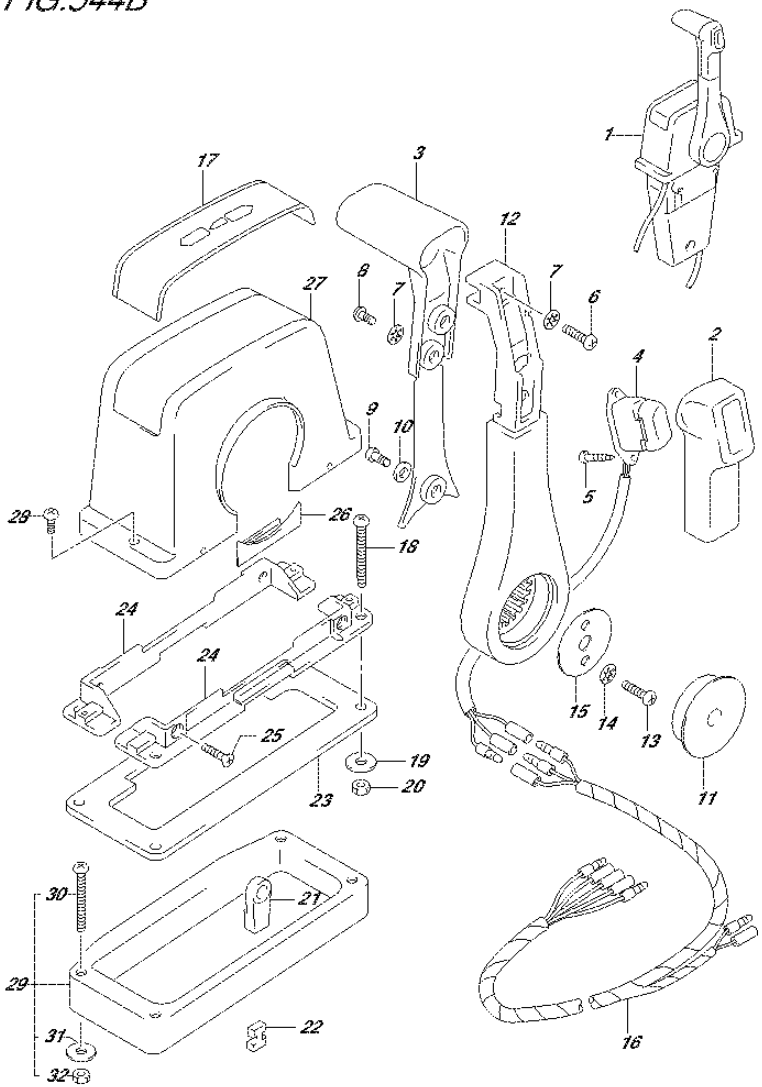

FIG.544B (3-D-2) OPT:REMOTE CONTROL ASSY SINGLE (1) (DF70A E40)

REF NO.	PART NO.	DESCRIPTION	Q'TY	REMARKS
1	67200-93J13	REMOTE CONTROL ASSY	1	
2	67261-93J00	.GRIP, NO.1	1	
3	67263-93J00	.GRIP, NO.2	1	
4	37850-93J10	.SWITCH ASSY, PTT	1	
5	67295-92E10	.SCREW	2	
6	67296-88D10	.SCREW	1	
7	67288-92E20	.WASHER	3	
8	67295-92E00	.SCREW	2	
9	67296-92E70	.SCREW	1	
10	67288-92E40	.WASHER	1	
11	67257-92E00	.CAP, LEVER	1	
12	67251-93J00	.LEVER, HANDLE	1	
13	67296-92E60	.SCREW	2	
14	67288-92E30	.WASHER	2	
15	67253-92E00	.WASHER	1	
16	36890-93J00	.WIRE, NEUTRAL & PTT SW	1	
17	67281-93J00	.DECAL	1	
18	67296-92E30	.SCREW	4	
19	09160-05024	.WASHER (5.5X16X1.5)	4	
20	67287-92E00	.NUT	4	
21	67275-95600	.END, CABLE	2	
22	67273-95600	.SPACER	1	
23	67273-92E00	.GROMMET	1	
24	67274-92E00	.FLANGE	2	
25	67296-95610	.SCREW	4	
26	67271-92E00	.COVER	1	
27	67211-93J00	.COVER	1	
28	67296-92E70	.SCREW	2	
29	67500-93J00	KIT, REMOCON SPACER SINGLE	1	
30	09125-05135	.SCREW (5X65)	4	
31	09160-05029	.WASHER (5.5X12X0.8)	4	
32	09140-05005	.NUT	4	

FIG.544C

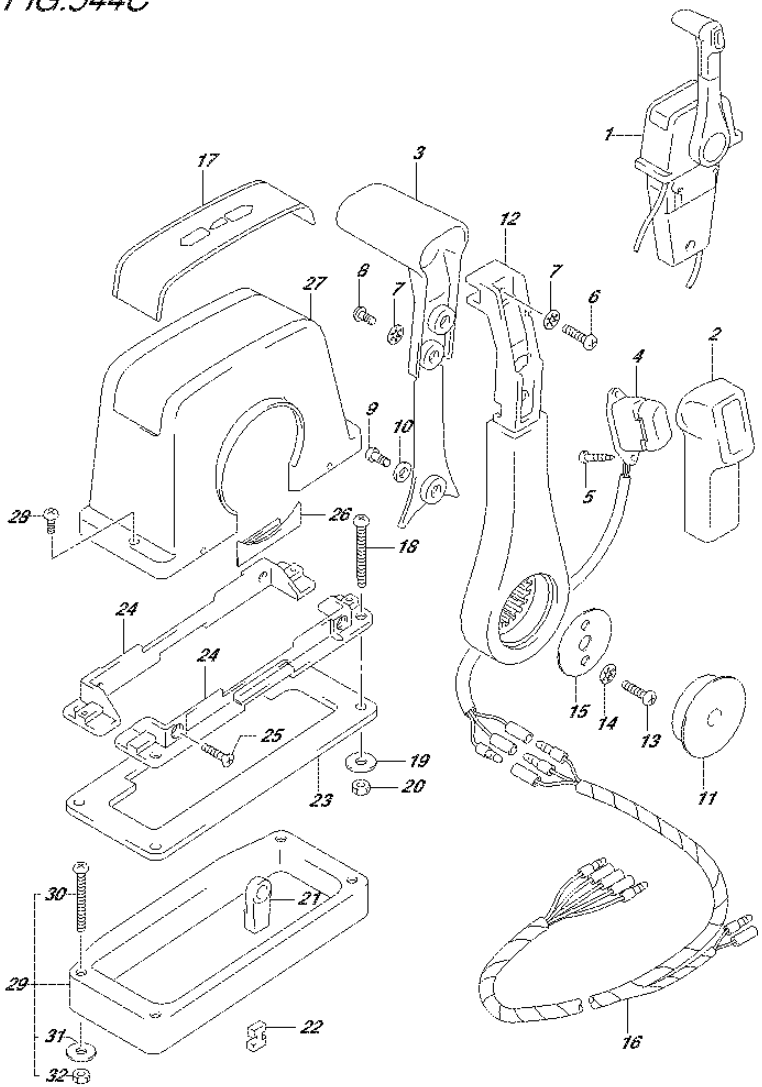

FIG.544C (3-D-3) OPT:REMOTE CONTROL ASSY SINGLE (1) (DF80A E01)

REF NO.	PART NO.	DESCRIPTION	Q'TY	REMARKS
1	67200-93J13	REMOTE CONTROL ASSY	1	
2	67261-93J00	.GRIP, NO.1	1	
3	67263-93J00	.GRIP, NO.2	1	
4	37850-93J10	.SWITCH ASSY, PTT	1	
5	67295-92E10	.SCREW	2	
6	67296-88D10	.SCREW	1	
7	67288-92E20	.WASHER	3	
8	67295-92E00	.SCREW	2	
9	67296-92E70	.SCREW	1	
10	67288-92E40	.WASHER	1	
11	67257-92E00	.CAP, LEVER	1	
12	67251-93J00	.LEVER, HANDLE	1	
13	67296-92E60	.SCREW	2	
14	67288-92E30	.WASHER	2	
15	67253-92E00	.WASHER	1	
16	36890-93J00	.WIRE, NEUTRAL & PTT SW	1	
17	67281-93J00	.DECAL	1	
18	67296-92E30	.SCREW	4	
19	09160-05024	.WASHER (5.5X16X1.5)	4	
20	67287-92E00	.NUT	4	
21	67275-95600	.END, CABLE	2	
22	67273-95600	.SPACER	1	
23	67273-92E00	.GROMMET	1	
24	67274-92E00	.FLANGE	2	
25	67296-95610	.SCREW	4	
26	67271-92E00	.COVER	1	
27	67211-93J00	.COVER	1	
28	67296-92E70	.SCREW	2	
29	67500-93J00	KIT, REMOCON SPACER SINGLE	1	
30	09125-05135	.SCREW (5X65)	4	
31	09160-05029	.WASHER (5.5X12X0.8)	4	
32	09140-05005	.NUT	4	

FIG.544D

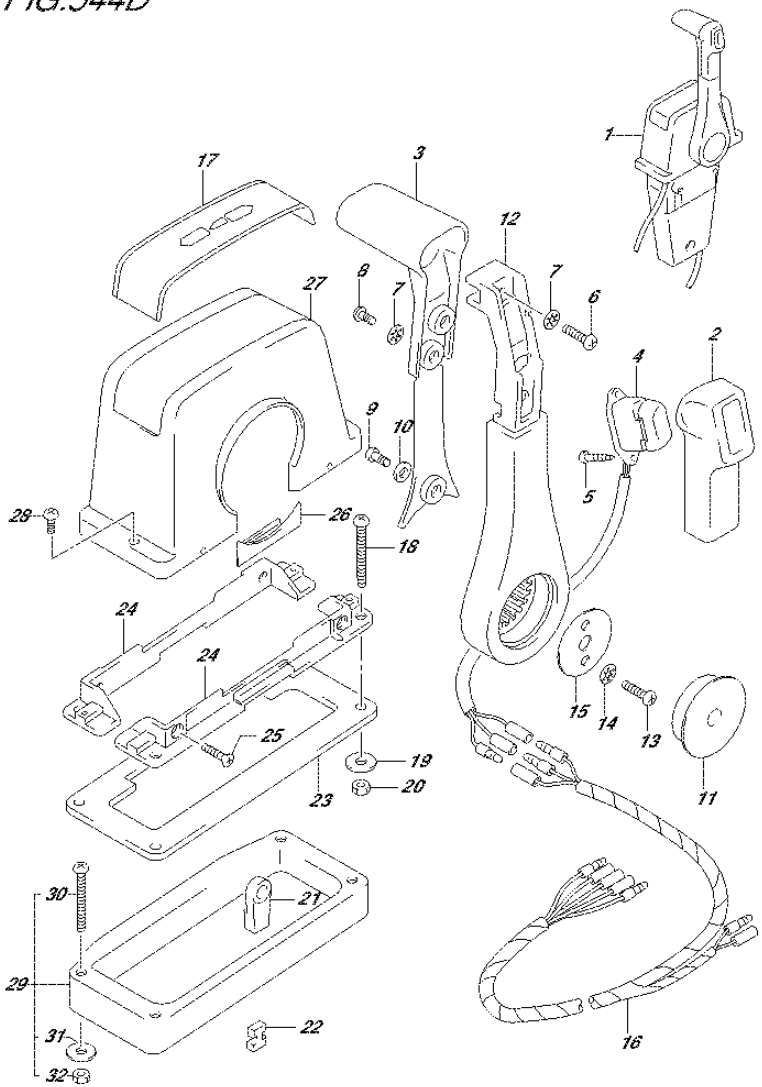

FIG.544D (3-D-4) OPT:REMOTE CONTROL ASSY SINGLE (1) (DF80A E40)

REF NO.	PART NO.	DESCRIPTION	Q'TY	REMARKS
1	67200-93J13	REMOTE CONTROL ASSY	1	
2	67261-93J00	.GRIP, NO.1	1	
3	67263-93J00	.GRIP, NO.2	1	
4	37850-93J10	.SWITCH ASSY, PTT	1	
5	67295-92E10	.SCREW	2	
6	67296-88D10	.SCREW	1	
7	67288-92E20	.WASHER	3	
8	67295-92E00	.SCREW	2	
9	67296-92E70	.SCREW	1	
10	67288-92E40	.WASHER	1	
11	67257-92E00	.CAP, LEVER	1	
12	67251-93J00	.LEVER, HANDLE	1	
13	67296-92E60	.SCREW	2	
14	67288-92E30	.WASHER	2	
15	67253-92E00	.WASHER	1	
16	36890-93J00	.WIRE, NEUTRAL & PTT SW	1	
17	67281-93J00	.DECAL	1	
18	67296-92E30	.SCREW	4	
19	09160-05024	.WASHER (5.5X16X1.5)	4	
20	67287-92E00	.NUT	4	
21	67275-95600	.END, CABLE	2	
22	67273-95600	.SPACER	1	
23	67273-92E00	.GROMMET	1	
24	67274-92E00	.FLANGE	2	
25	67296-95610	.SCREW	4	
26	67271-92E00	.COVER	1	
27	67211-93J00	.COVER	1	
28	67296-92E70	.SCREW	2	
29	67500-93J00	KIT, REMOCON SPACER SINGLE	1	
30	09125-05135	.SCREW (5X65)	4	
31	09160-05029	.WASHER (5.5X12X0.8)	4	
32	09140-05005	.NUT	4	

FIG.544E

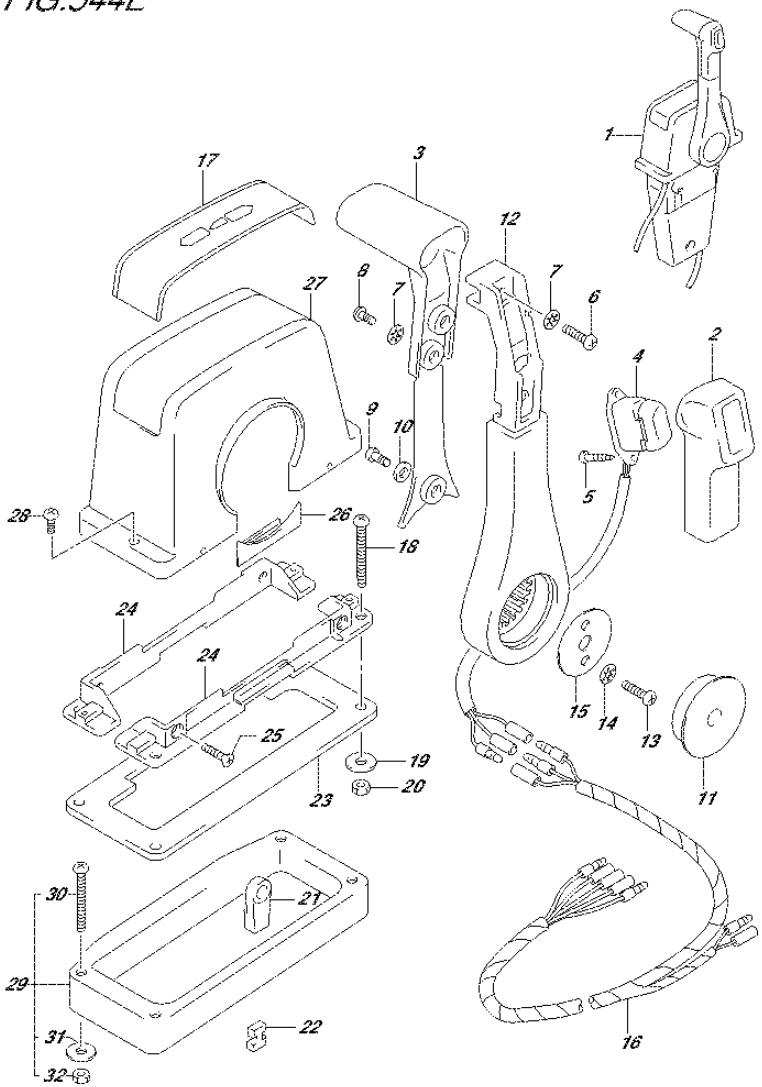

FIG.544E (3-D-5) OPT:REMOTE CONTROL ASSY SINGLE (1) (DF90A E01)

REF NO.	PART NO.	DESCRIPTION	Q'TY	REMARKS
1	67200-93J13	REMOTE CONTROL ASSY	1	
2	67261-93J00	.GRIP, NO.1	1	
3	67263-93J00	.GRIP, NO.2	1	
4	37850-93J10	.SWITCH ASSY, PTT	1	
5	67295-92E10	.SCREW	2	
6	67296-88D10	.SCREW	1	
7	67288-92E20	.WASHER	3	
8	67295-92E00	.SCREW	2	
9	67296-92E70	.SCREW	1	
10	67288-92E40	.WASHER	1	
11	67257-92E00	.CAP, LEVER	1	
12	67251-93J00	.LEVER, HANDLE	1	
13	67296-92E60	.SCREW	2	
14	67288-92E30	.WASHER	2	
15	67253-92E00	.WASHER	1	
16	36890-93J00	.WIRE, NEUTRAL & PTT SW	1	
17	67281-93J00	.DECAL	1	
18	67296-92E30	.SCREW	4	
19	09160-05024	.WASHER (5.5X16X1.5)	4	
20	67287-92E00	.NUT	4	
21	67275-95600	.END, CABLE	2	
22	67273-95600	.SPACER	1	
23	67273-92E00	.GROMMET	1	
24	67274-92E00	.FLANGE	2	
25	67296-95610	.SCREW	4	
26	67271-92E00	.COVER	1	
27	67211-93J00	.COVER	1	
28	67296-92E70	.SCREW	2	
29	67500-93J00	KIT, REMOCON SPACER SINGLE	1	
30	09125-05135	.SCREW (5X65)	4	
31	09160-05029	.WASHER (5.5X12X0.8)	4	
32	09140-05005	.NUT	4	

FIG.544F

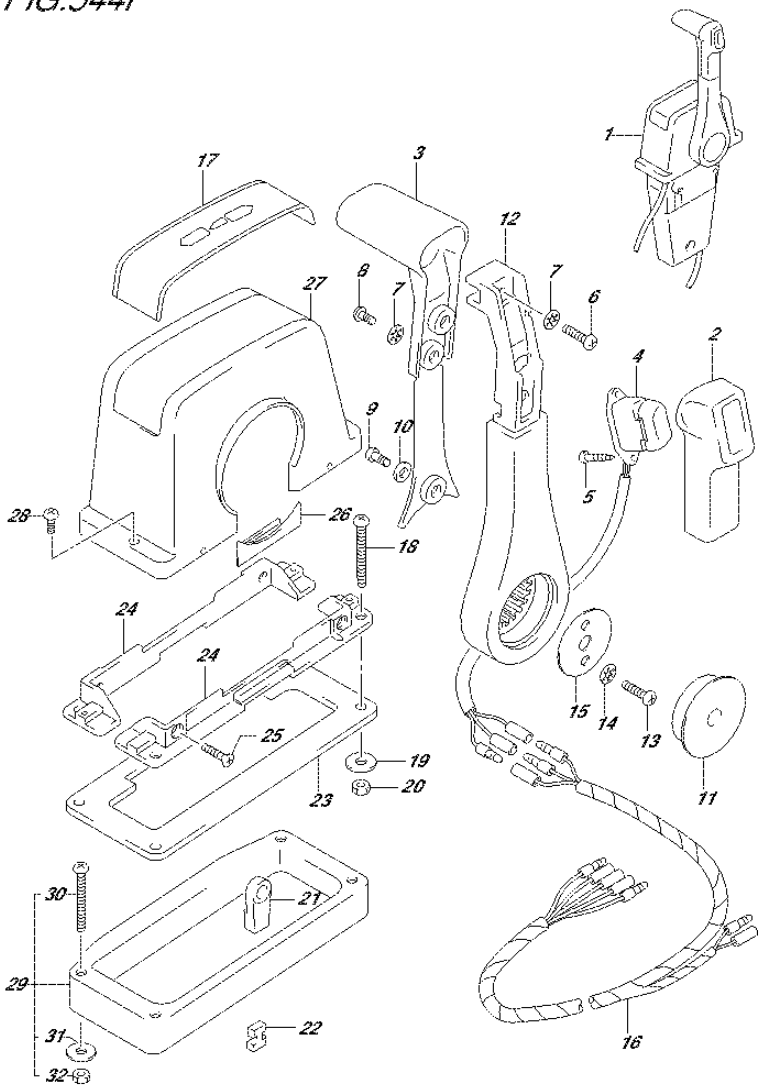

FIG.544F (3-D-6) OPT:REMOTE CONTROL ASSY SINGLE (1) (DF90A E40)

REF NO.	PART NO.	DESCRIPTION	Q'TY	REMARKS
1	67200-93J13	REMOTE CONTROL ASSY	1	
2	67261-93J00	.GRIP, NO.1	1	
3	67263-93J00	.GRIP, NO.2	1	
4	37850-93J10	.SWITCH ASSY, PTT	1	
5	67295-92E10	.SCREW	2	
6	67296-88D10	.SCREW	1	
7	67288-92E20	.WASHER	3	
8	67295-92E00	.SCREW	2	
9	67296-92E70	.SCREW	1	
10	67288-92E40	.WASHER	1	
11	67257-92E00	.CAP, LEVER	1	
12	67251-93J00	.LEVER, HANDLE	1	
13	67296-92E60	.SCREW	2	
14	67288-92E30	.WASHER	2	
15	67253-92E00	.WASHER	1	
16	36890-93J00	.WIRE, NEUTRAL & PTT SW	1	
17	67281-93J00	.DECAL	1	
18	67296-92E30	.SCREW	4	
19	09160-05024	.WASHER (5.5X16X1.5)	4	
20	67287-92E00	.NUT	4	
21	67275-95600	.END, CABLE	2	
22	67273-95600	.SPACER	1	
23	67273-92E00	.GROMMET	1	
24	67274-92E00	.FLANGE	2	
25	67296-95610	.SCREW	4	
26	67271-92E00	.COVER	1	
27	67211-93J00	.COVER	1	
28	67296-92E70	.SCREW	2	
29	67500-93J00	KIT, REMOCON SPACER SINGLE	1	
30	09125-05135	.SCREW (5X65)	4	
31	09160-05029	.WASHER (5.5X12X0.8)	4	
32	09140-05005	.NUT	4	

FIG.545A

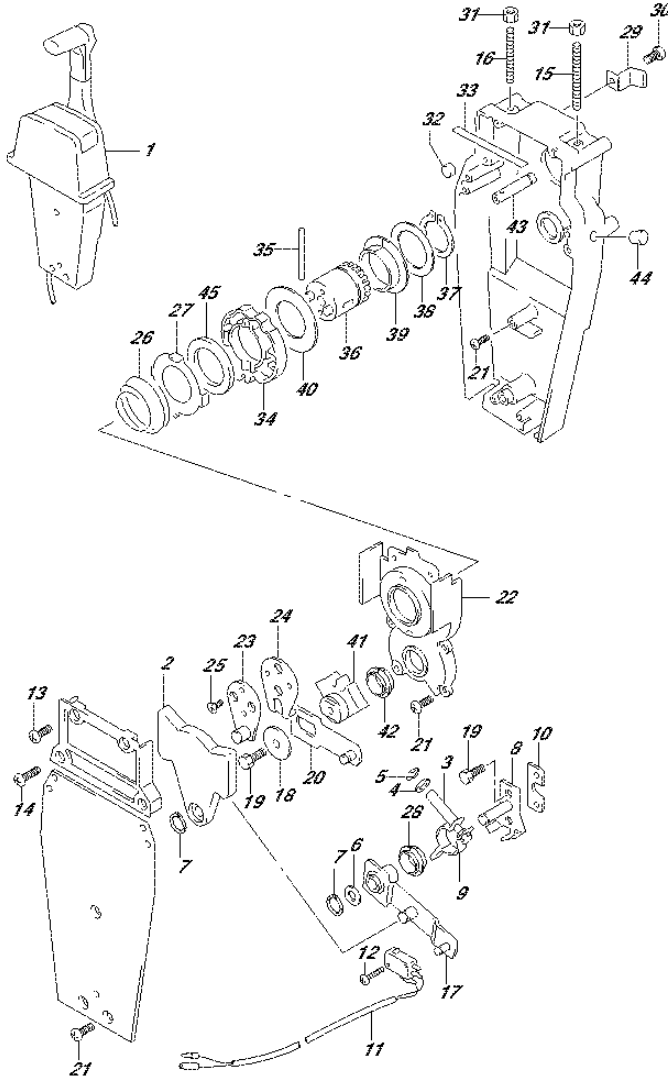

FIG.545A (3-D-7) OPT:REMOTE CONTROL ASSY SINGLE (2) (DF70A E01)

REF NO.	PART NO.	DESCRIPTION	Q'TY	REMARKS
1	67200-93J13	REMOTE CONTROL ASSY	1	
2	67222-92E00	.DUAL PLATE	1	
3	67223-92E00	.BRAKE ADJUST	1	
4	67288-92E00	.WASHER	1	
5	67292-94300	.E RING	4	
6	67288-92E10	.WASHER	1	
7	67291-92E00	.SNAP RING	2	
8	67221-92E00	.SHIFT ASSY	1	
9	67224-92E00	.BRAKE ARM ASSY	1	
10	67294-92E00	.SPACER	1	
11	37721-95500	.SWITCH ASSY, NEUTRAL	1	
12	67296-92E11	.SCREW (3X15)	2	
13	67296-88D10	.SCREW (5X16)	2	
14	67296-92E20	.SCREW (5X25)	2	
15	67226-92E00	.BOLT, STOPPER FRONT	1	
16	67226-92E10	.BOLT, STOPPER REAR	1	
17	67240-92E00	.ARM ASSY, THROTTLE	1	
18	67228-92E00	.WASHER	1	
19	67286-92E00	.BOLT (6X18)	3	
20	67230-92E00	.ARM ASSY, SHIFT	1	
21	09125-05042	.SCREW (5X10)	9	
22	67234-92E00	.CASE, GEAR	1	
23	67245-92E00	.LEVER ASSY, THROTTLE	1	
24	67227-92E00	.STOPPER	1	
25	09126-06006	.SCREW (6X20)	2	
26	67233-92E00	.SPRING	1	
27	67235-92E00	.PLATE, SHIFT LOCK	1	
28	67232-95620	.BUSH	1	
29	67269-92E00	.BRACKET	1	
30	67296-88D10	.SCREW	1	
31	09140-06020	.NUT	2	
32	67236-92E00	.ROLLER	1	
33	67237-92E01	.SPRING	6	
34	67238-92E00	.GEAR, DRIVE	1	

FIG.545A

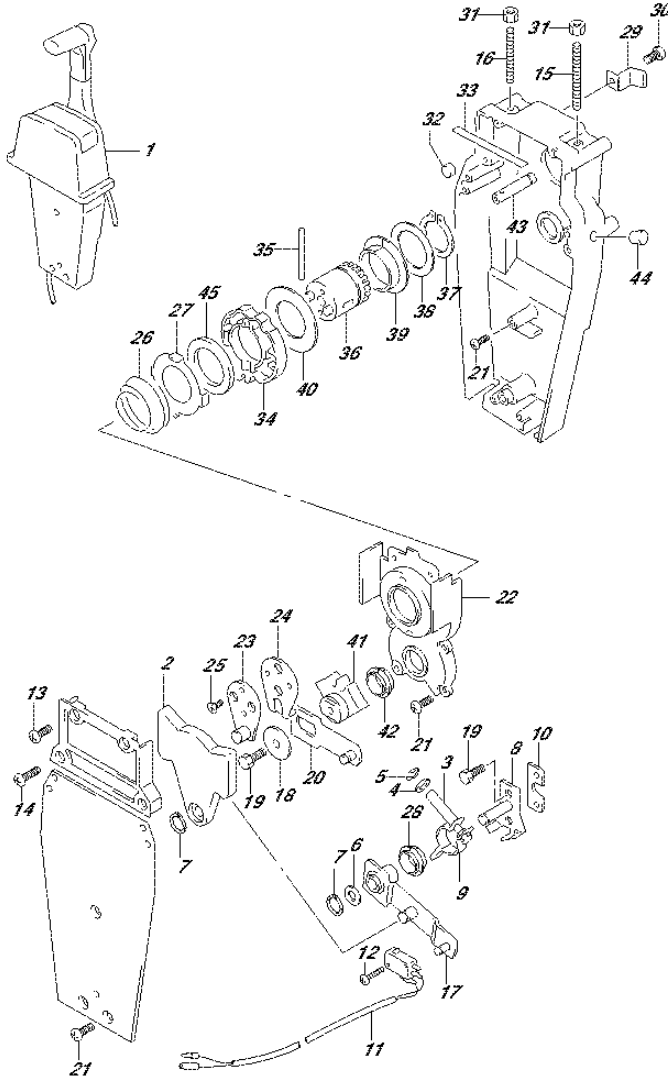

FIG.545A (3-D-8) OPT:REMOTE CONTROL ASSY SINGLE (2) (DF70A E01)

REF NO.	PART NO.	DESCRIPTION	Q'TY	REMARKS
35	67239-92E00	.PIN	1	
36	67246-92E00	.SHIFT, DRIVE	1	
37	67291-92E10	.SNAP RING	1	
38	67253-92E10	.WASHER	1	
39	67252-92E10	.BUSH	1	
40	67253-95600	.WASHER	1	
41	67231-92E00	.GEAR, SHIFT	1	
42	67232-95600	.BUSH	1	
43	67241-92E10	.ROD, FREE ACC	1	
44	67243-92E00	.CAP, HOLE	1	
45	67239-92E10	.PLATE, SHIFT PIN	1	

FIG.545B

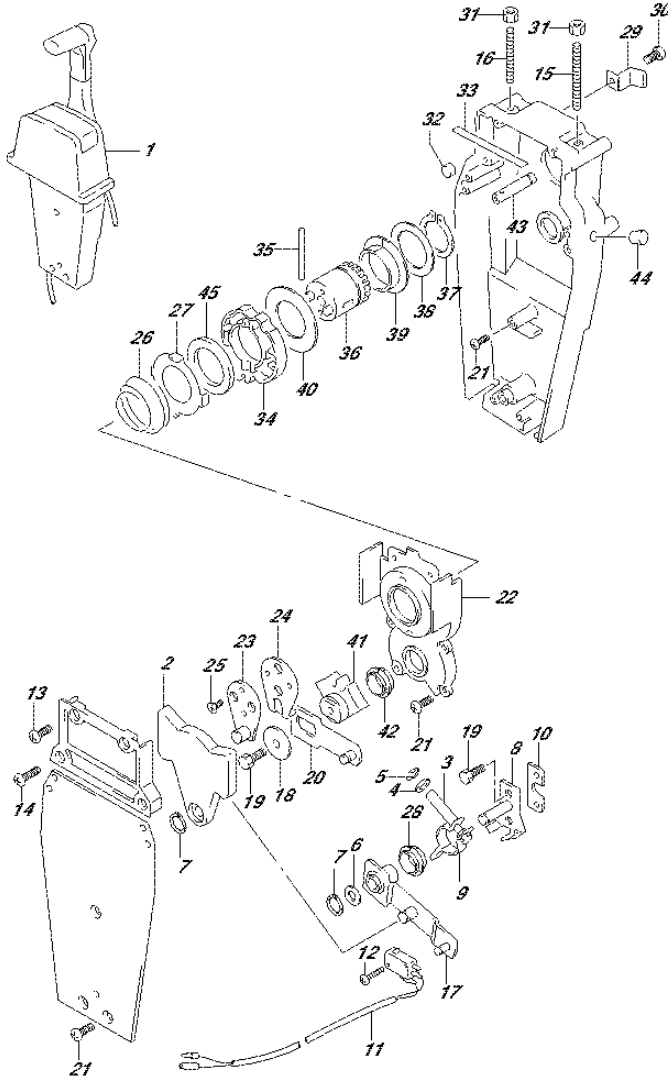

FIG.545B (3-D-9) OPT:REMOTE CONTROL ASSY SINGLE (2) (DF70A E40)

REF NO.	PART NO.	DESCRIPTION	Q'TY	REMARKS
1	67200-93J13	REMOTE CONTROL ASSY	1	
2	67222-92E00	.DUAL PLATE	1	
3	67223-92E00	.BRAKE ADJUST	1	
4	67288-92E00	.WASHER	1	
5	67292-94300	.E RING	4	
6	67288-92E10	.WASHER	1	
7	67291-92E00	.SNAP RING	2	
8	67221-92E00	.SHIFT ASSY	1	
9	67224-92E00	.BRAKE ARM ASSY	1	
10	67294-92E00	.SPACER	1	
11	37721-95500	.SWITCH ASSY, NEUTRAL	1	
12	67296-92E11	.SCREW (3X15)	2	
13	67296-88D10	.SCREW (5X16)	2	
14	67296-92E20	.SCREW (5X25)	2	
15	67226-92E00	.BOLT, STOPPER FRONT	1	
16	67226-92E10	.BOLT, STOPPER REAR	1	
17	67240-92E00	.ARM ASSY, THROTTLE	1	
18	67228-92E00	.WASHER	1	
19	67286-92E00	.BOLT (6X18)	3	
20	67230-92E00	.ARM ASSY, SHIFT	1	
21	09125-05042	.SCREW (5X10)	9	
22	67234-92E00	.CASE, GEAR	1	
23	67245-92E00	.LEVER ASSY, THROTTLE	1	
24	67227-92E00	.STOPPER	1	
25	09126-06006	.SCREW (6X20)	2	
26	67233-92E00	.SPRING	1	
27	67235-92E00	.PLATE, SHIFT LOCK	1	
28	67232-95620	.BUSH	1	
29	67269-92E00	.BRACKET	1	
30	67296-88D10	.SCREW	1	
31	09140-06020	.NUT	2	
32	67236-92E00	.ROLLER	1	
33	67237-92E01	.SPRING	6	
34	67238-92E00	.GEAR, DRIVE	1	

FIG.545B

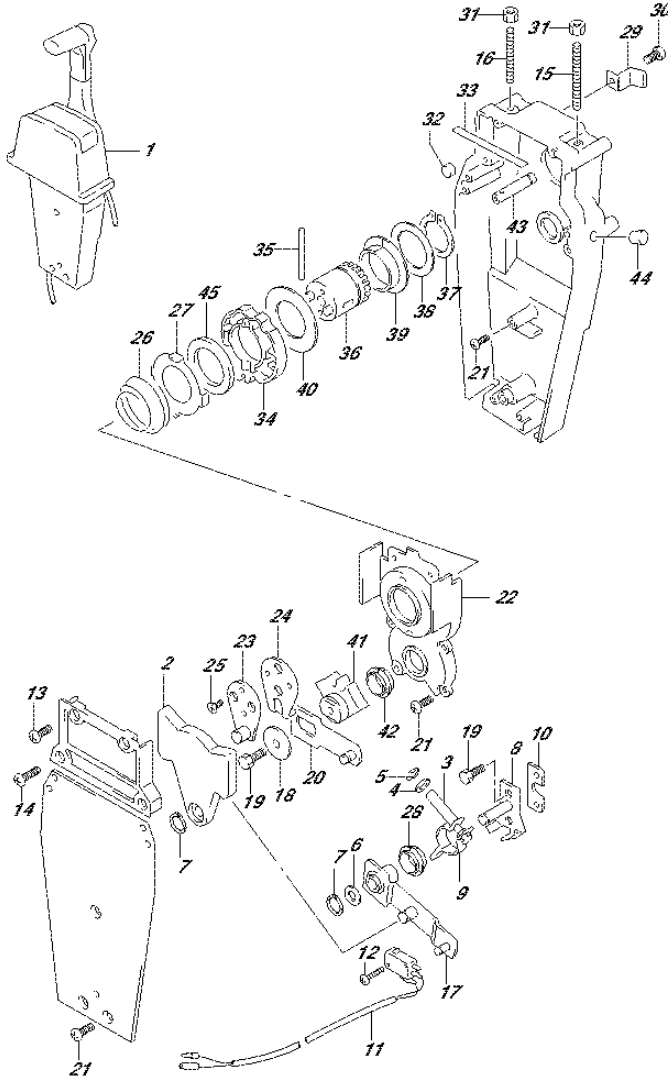

FIG.545B (3-D-10) OPT:REMOTE CONTROL ASSY SINGLE (2) (DF70A E40)

REF NO.	PART NO.	DESCRIPTION	Q'TY	REMARKS
35	67239-92E00	.PIN	1	
36	67246-92E00	.SHIFT, DRIVE	1	
37	67291-92E10	.SNAP RING	1	
38	67253-92E10	.WASHER	1	
39	67252-92E10	.BUSH	1	
40	67253-95600	.WASHER	1	
41	67231-92E00	.GEAR, SHIFT	1	
42	67232-95600	.BUSH	1	
43	67241-92E10	.ROD, FREE ACC	1	
44	67243-92E00	.CAP, HOLE	1	
45	67239-92E10	.PLATE, SHIFT PIN	1	

FIG.545C

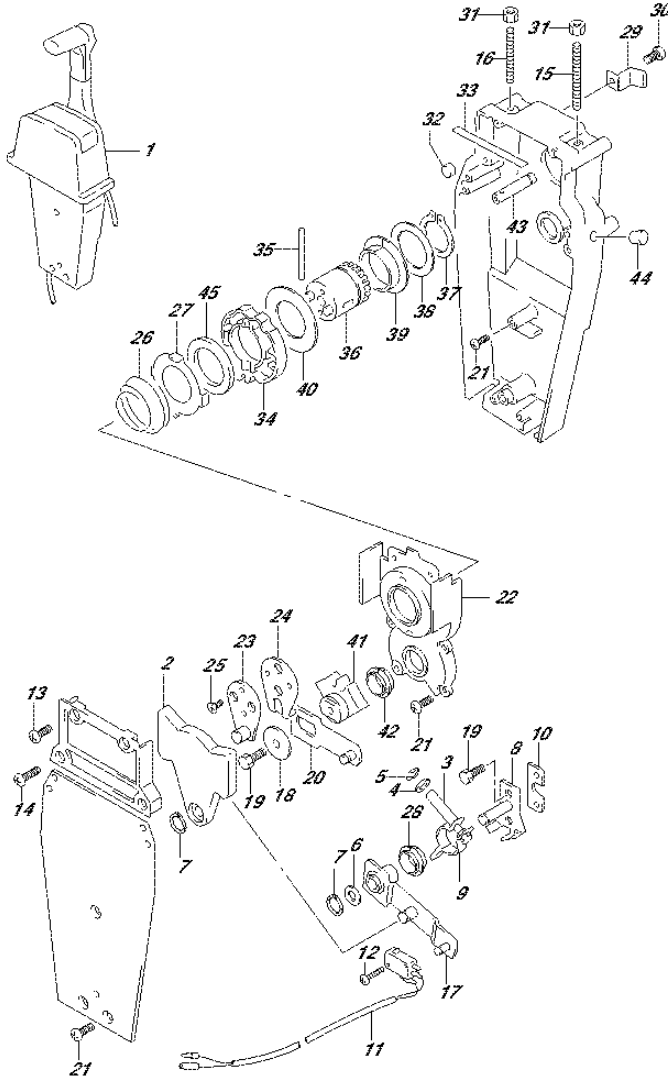

FIG.545C (3-D-11) OPT:REMOTE CONTROL ASSY SINGLE (2) (DF80A E01)

REF NO.	PART NO.	DESCRIPTION	Q'TY	REMARKS
1	67200-93J13	REMOTE CONTROL ASSY	1	
2	67222-92E00	.DUAL PLATE	1	
3	67223-92E00	.BRAKE ADJUST	1	
4	67288-92E00	.WASHER	1	
5	67292-94300	.E RING	4	
6	67288-92E10	.WASHER	1	
7	67291-92E00	.SNAP RING	2	
8	67221-92E00	.SHIFT ASSY	1	
9	67224-92E00	.BRAKE ARM ASSY	1	
10	67294-92E00	.SPACER	1	
11	37721-95500	.SWITCH ASSY, NEUTRAL	1	
12	67296-92E11	.SCREW (3X15)	2	
13	67296-88D10	.SCREW (5X16)	2	
14	67296-92E20	.SCREW (5X25)	2	
15	67226-92E00	.BOLT, STOPPER FRONT	1	
16	67226-92E10	.BOLT, STOPPER REAR	1	
17	67240-92E00	.ARM ASSY, THROTTLE	1	
18	67228-92E00	.WASHER	1	
19	67286-92E00	.BOLT (6X18)	3	
20	67230-92E00	.ARM ASSY, SHIFT	1	
21	09125-05042	.SCREW (5X10)	9	
22	67234-92E00	.CASE, GEAR	1	
23	67245-92E00	.LEVER ASSY, THROTTLE	1	
24	67227-92E00	.STOPPER	1	
25	09126-06006	.SCREW (6X20)	2	
26	67233-92E00	.SPRING	1	
27	67235-92E00	.PLATE, SHIFT LOCK	1	
28	67232-95620	.BUSH	1	
29	67269-92E00	.BRACKET	1	
30	67296-88D10	.SCREW	1	
31	09140-06020	.NUT	2	
32	67236-92E00	.ROLLER	1	
33	67237-92E01	.SPRING	6	
34	67238-92E00	.GEAR, DRIVE	1	

FIG.545C

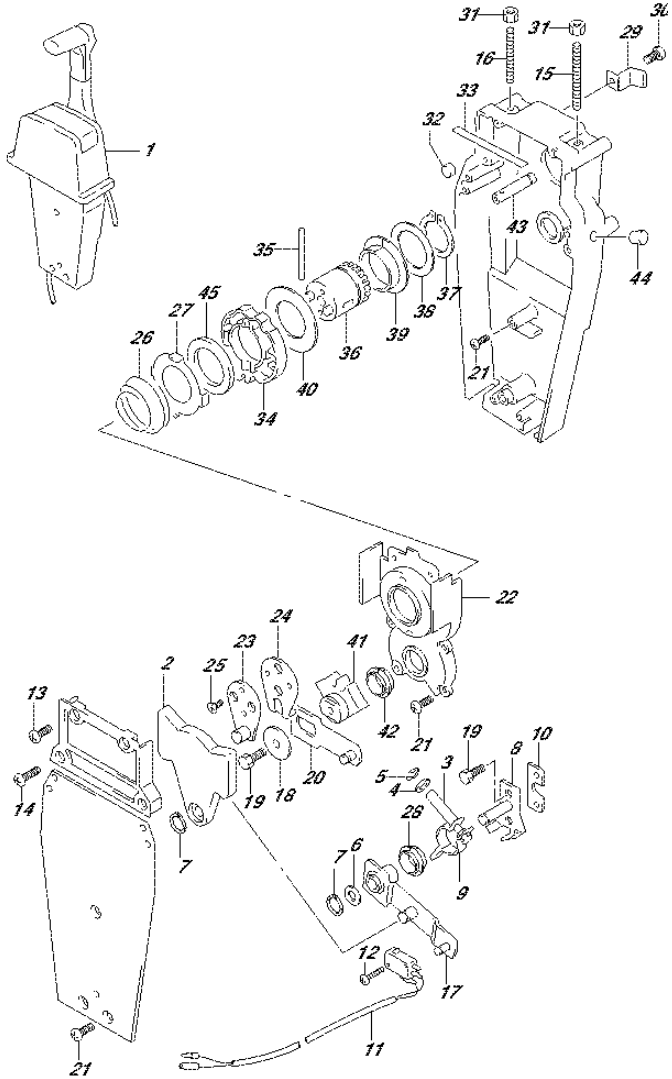

FIG.545C (3-D-12) OPT:REMOTE CONTROL ASSY SINGLE (2) (DF80A E01)

REF NO.	PART NO.	DESCRIPTION	Q'TY	REMARKS
35	67239-92E00	.PIN	1	
36	67246-92E00	.SHIFT, DRIVE	1	
37	67291-92E10	.SNAP RING	1	
38	67253-92E10	.WASHER	1	
39	67252-92E10	.BUSH	1	
40	67253-95600	.WASHER	1	
41	67231-92E00	.GEAR, SHIFT	1	
42	67232-95600	.BUSH	1	
43	67241-92E10	.ROD, FREE ACC	1	
44	67243-92E00	.CAP, HOLE	1	
45	67239-92E10	.PLATE, SHIFT PIN	1	

FIG.545D

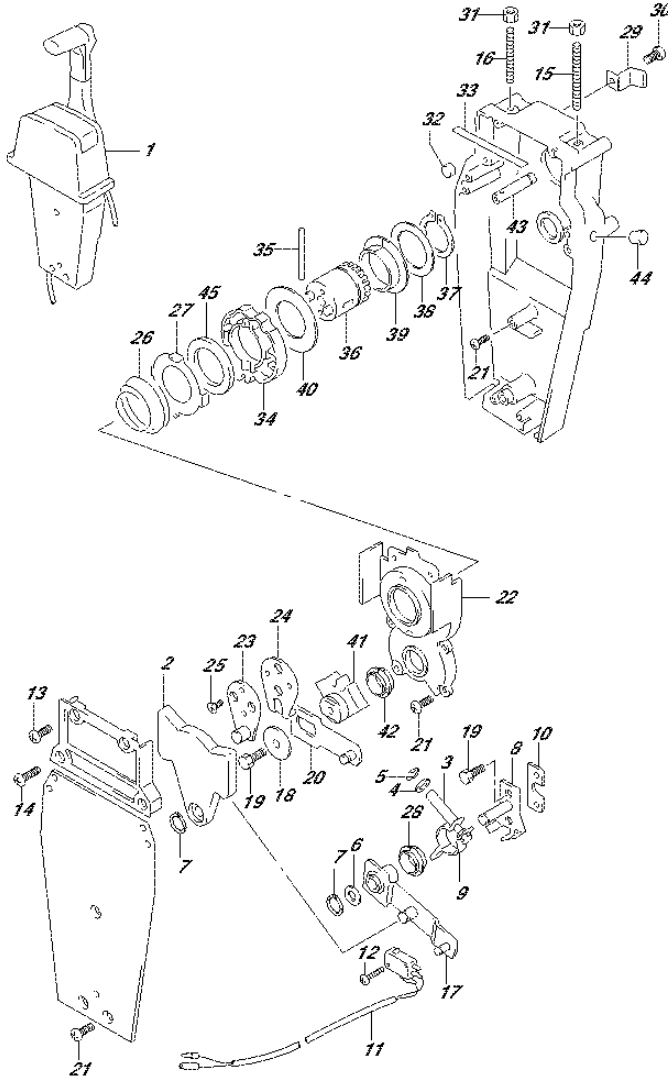

FIG.545D (3-D-13) OPT:REMOTE CONTROL ASSY SINGLE (2) (DF80A E40)

REF NO.	PART NO.	DESCRIPTION	Q'TY	REMARKS
1	67200-93J13	REMOTE CONTROL ASSY	1	
2	67222-92E00	.DUAL PLATE	1	
3	67223-92E00	.BRAKE ADJUST	1	
4	67288-92E00	.WASHER	1	
5	67292-94300	.E RING	4	
6	67288-92E10	.WASHER	1	
7	67291-92E00	.SNAP RING	2	
8	67221-92E00	.SHIFT ASSY	1	
9	67224-92E00	.BRAKE ARM ASSY	1	
10	67294-92E00	.SPACER	1	
11	37721-95500	.SWITCH ASSY, NEUTRAL	1	
12	67296-92E11	.SCREW (3X15)	2	
13	67296-88D10	.SCREW (5X16)	2	
14	67296-92E20	.SCREW (5X25)	2	
15	67226-92E00	.BOLT, STOPPER FRONT	1	
16	67226-92E10	.BOLT, STOPPER REAR	1	
17	67240-92E00	.ARM ASSY, THROTTLE	1	
18	67228-92E00	.WASHER	1	
19	67286-92E00	.BOLT (6X18)	3	
20	67230-92E00	.ARM ASSY, SHIFT	1	
21	09125-05042	.SCREW (5X10)	9	
22	67234-92E00	.CASE, GEAR	1	
23	67245-92E00	.LEVER ASSY, THROTTLE	1	
24	67227-92E00	.STOPPER	1	
25	09126-06006	.SCREW (6X20)	2	
26	67233-92E00	.SPRING	1	
27	67235-92E00	.PLATE, SHIFT LOCK	1	
28	67232-95620	.BUSH	1	
29	67269-92E00	.BRACKET	1	
30	67296-88D10	.SCREW	1	
31	09140-06020	.NUT	2	
32	67236-92E00	.ROLLER	1	
33	67237-92E01	.SPRING	6	
34	67238-92E00	.GEAR, DRIVE	1	

FIG.545D

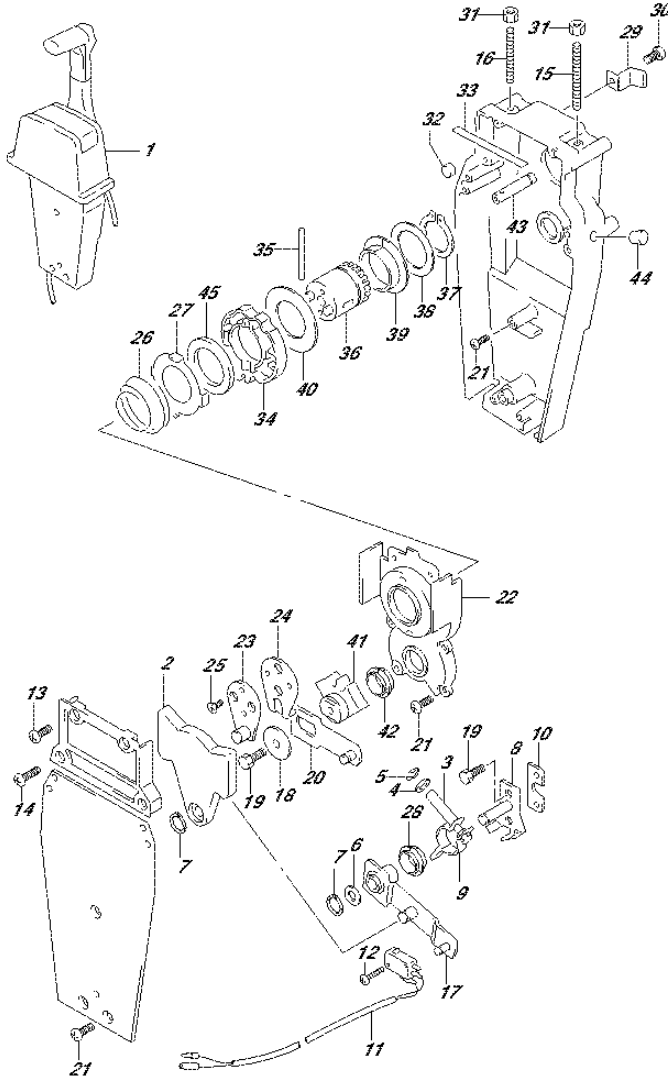

DF90A_E01_015_545D
OPT:REMOTE CONTROL ASSY SINGLE (2)

FIG.545D (3-D-14) OPT:REMOTE CONTROL ASSY SINGLE (2) (DF80A E40)

REF NO.	PART NO.	DESCRIPTION	Q'TY	REMARKS
35	67239-92E00	.PIN	1	
36	67246-92E00	.SHIFT, DRIVE	1	
37	67291-92E10	.SNAP RING	1	
38	67253-92E10	.WASHER	1	
39	67252-92E10	.BUSH	1	
40	67253-95600	.WASHER	1	
41	67231-92E00	.GEAR, SHIFT	1	
42	67232-95600	.BUSH	1	
43	67241-92E10	.ROD, FREE ACC	1	
44	67243-92E00	.CAP, HOLE	1	
45	67239-92E10	.PLATE, SHIFT PIN	1	

FIG.545E

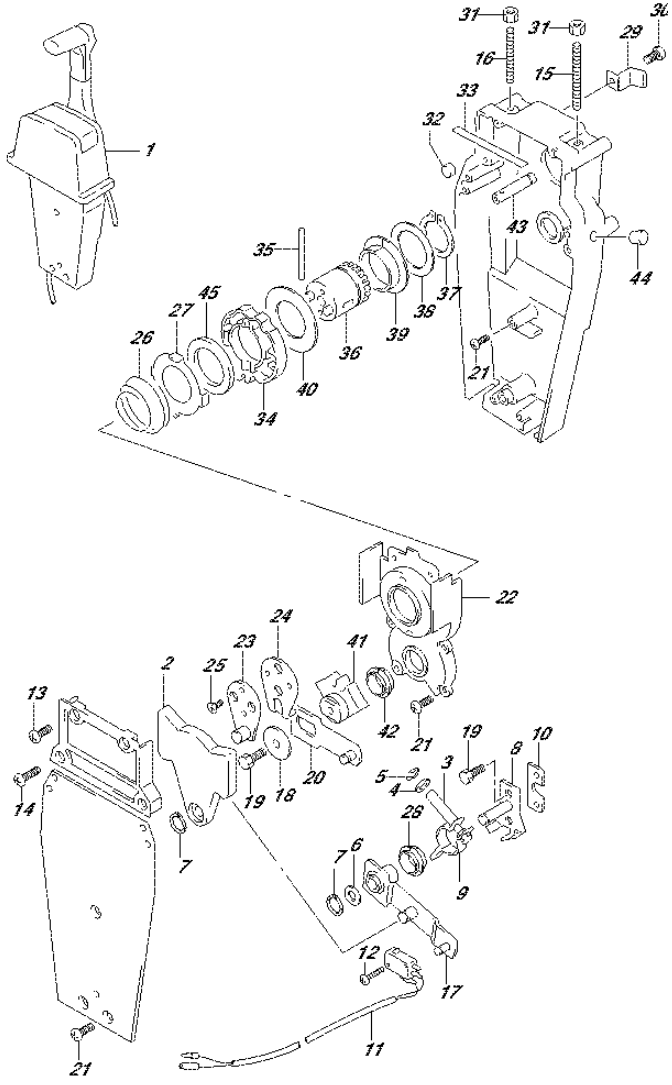

FIG.545E (3-D-15) OPT:REMOTE CONTROL ASSY SINGLE (2) (DF90A E01)

REF NO.	PART NO.	DESCRIPTION	Q'TY	REMARKS
1	67200-93J13	REMOTE CONTROL ASSY	1	
2	67222-92E00	.DUAL PLATE	1	
3	67223-92E00	.BRAKE ADJUST	1	
4	67288-92E00	.WASHER	1	
5	67292-94300	.E RING	4	
6	67288-92E10	.WASHER	1	
7	67291-92E00	.SNAP RING	2	
8	67221-92E00	.SHIFT ASSY	1	
9	67224-92E00	.BRAKE ARM ASSY	1	
10	67294-92E00	.SPACER	1	
11	37721-95500	.SWITCH ASSY, NEUTRAL	1	
12	67296-92E11	.SCREW (3X15)	2	
13	67296-88D10	.SCREW (5X16)	2	
14	67296-92E20	.SCREW (5X25)	2	
15	67226-92E00	.BOLT, STOPPER FRONT	1	
16	67226-92E10	.BOLT, STOPPER REAR	1	
17	67240-92E00	.ARM ASSY, THROTTLE	1	
18	67228-92E00	.WASHER	1	
19	67286-92E00	.BOLT (6X18)	3	
20	67230-92E00	.ARM ASSY, SHIFT	1	
21	09125-05042	.SCREW (5X10)	9	
22	67234-92E00	.CASE, GEAR	1	
23	67245-92E00	.LEVER ASSY, THROTTLE	1	
24	67227-92E00	.STOPPER	1	
25	09126-06006	.SCREW (6X20)	2	
26	67233-92E00	.SPRING	1	
27	67235-92E00	.PLATE, SHIFT LOCK	1	
28	67232-95620	.BUSH	1	
29	67269-92E00	.BRACKET	1	
30	67296-88D10	.SCREW	1	
31	09140-06020	.NUT	2	
32	67236-92E00	.ROLLER	1	
33	67237-92E01	.SPRING	6	
34	67238-92E00	.GEAR, DRIVE	1	

FIG.545E

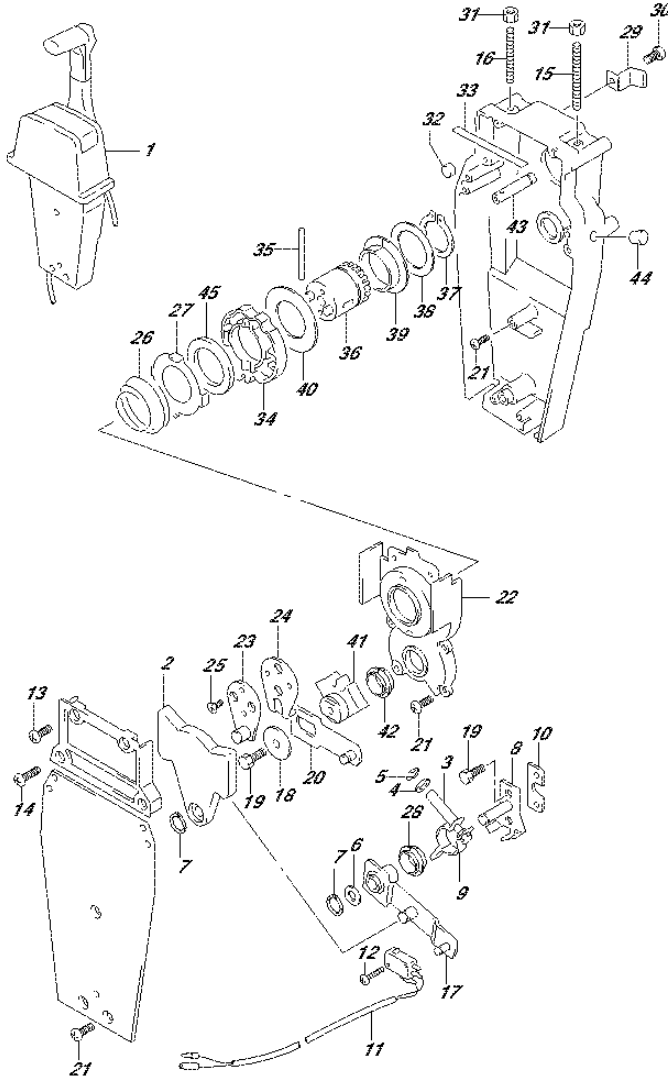

FIG.545E (3-E-2) OPT:REMOTE CONTROL ASSY SINGLE (2) (DF90A E01)

REF NO.	PART NO.	DESCRIPTION	Q'TY	REMARKS
35	67239-92E00	.PIN	1	
36	67246-92E00	.SHIFT, DRIVE	1	
37	67291-92E10	.SNAP RING	1	
38	67253-92E10	.WASHER	1	
39	67252-92E10	.BUSH	1	
40	67253-95600	.WASHER	1	
41	67231-92E00	.GEAR, SHIFT	1	
42	67232-95600	.BUSH	1	
43	67241-92E10	.ROD, FREE ACC	1	
44	67243-92E00	.CAP, HOLE	1	
45	67239-92E10	.PLATE, SHIFT PIN	1	

FIG.545F

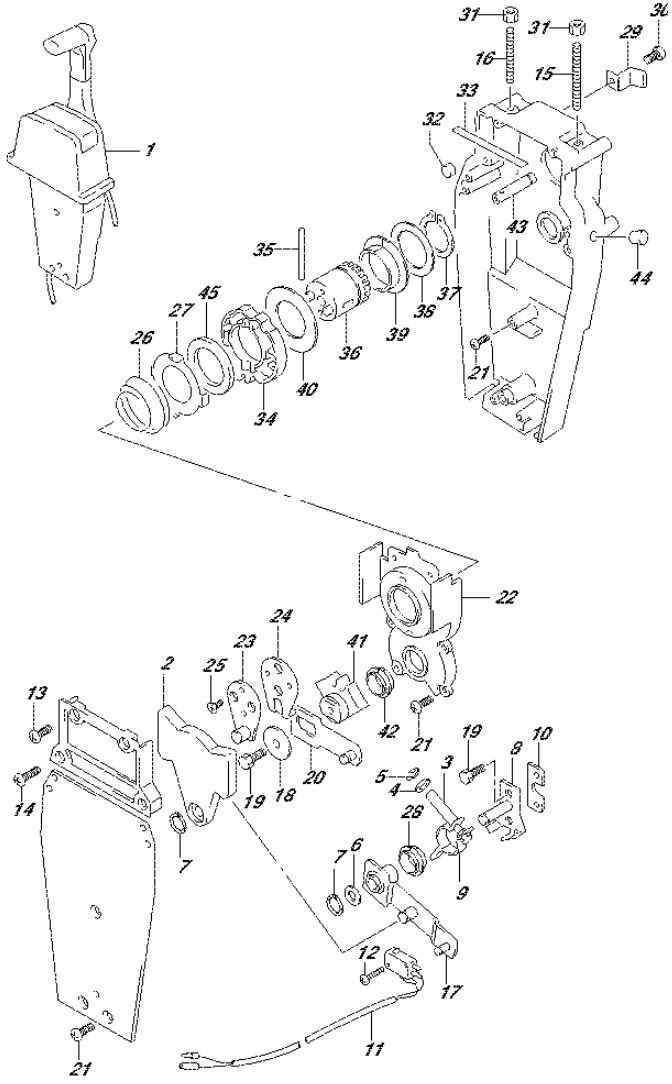

FIG.545F (3-E-3) OPT:REMOTE CONTROL ASSY SINGLE (2) (DF90A E40)

REF NO.	PART NO.	DESCRIPTION	Q'TY	REMARKS
1	67200-93J13	REMOTE CONTROL ASSY	1	
2	67222-92E00	.DUAL PLATE	1	
3	67223-92E00	.BRAKE ADJUST	1	
4	67288-92E00	.WASHER	1	
5	67292-94300	.E RING	4	
6	67288-92E10	.WASHER	1	
7	67291-92E00	.SNAP RING	2	
8	67221-92E00	.SHIFT ASSY	1	
9	67224-92E00	.BRAKE ARM ASSY	1	
10	67294-92E00	.SPACER	1	
11	37721-95500	.SWITCH ASSY, NEUTRAL	1	
12	67296-92E11	.SCREW (3X15)	2	
13	67296-88D10	.SCREW (5X16)	2	
14	67296-92E20	.SCREW (5X25)	2	
15	67226-92E00	.BOLT, STOPPER FRONT	1	
16	67226-92E10	.BOLT, STOPPER REAR	1	
17	67240-92E00	.ARM ASSY, THROTTLE	1	
18	67228-92E00	.WASHER	1	
19	67286-92E00	.BOLT (6X18)	3	
20	67230-92E00	.ARM ASSY, SHIFT	1	
21	09125-05042	.SCREW (5X10)	9	
22	67234-92E00	.CASE, GEAR	1	
23	67245-92E00	.LEVER ASSY, THROTTLE	1	
24	67227-92E00	.STOPPER	1	
25	09126-06006	.SCREW (6X20)	2	
26	67233-92E00	.SPRING	1	
27	67235-92E00	.PLATE, SHIFT LOCK	1	
28	67232-95620	.BUSH	1	
29	67269-92E00	.BRACKET	1	
30	67296-88D10	.SCREW	1	
31	09140-06020	.NUT	2	
32	67236-92E00	.ROLLER	1	
33	67237-92E01	.SPRING	6	
34	67238-92E00	.GEAR, DRIVE	1	

FIG.545F

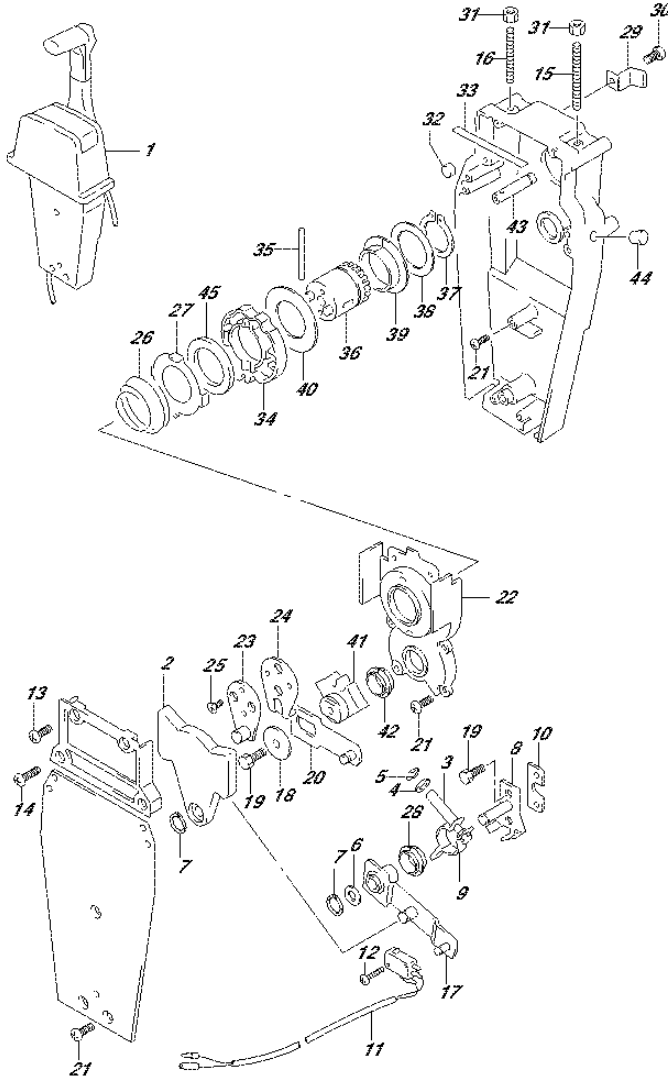

FIG.545F (3-E-4) OPT:REMOTE CONTROL ASSY SINGLE (2) (DF90A E40)

REF NO.	PART NO.	DESCRIPTION	Q'TY	REMARKS
35	67239-92E00	.PIN	1	
36	67246-92E00	.SHIFT, DRIVE	1	
37	67291-92E10	.SNAP RING	1	
38	67253-92E10	.WASHER	1	
39	67252-92E10	.BUSH	1	
40	67253-95600	.WASHER	1	
41	67231-92E00	.GEAR, SHIFT	1	
42	67232-95600	.BUSH	1	
43	67241-92E10	.ROD, FREE ACC	1	
44	67243-92E00	.CAP, HOLE	1	
45	67239-92E10	.PLATE, SHIFT PIN	1	

FIG.570A

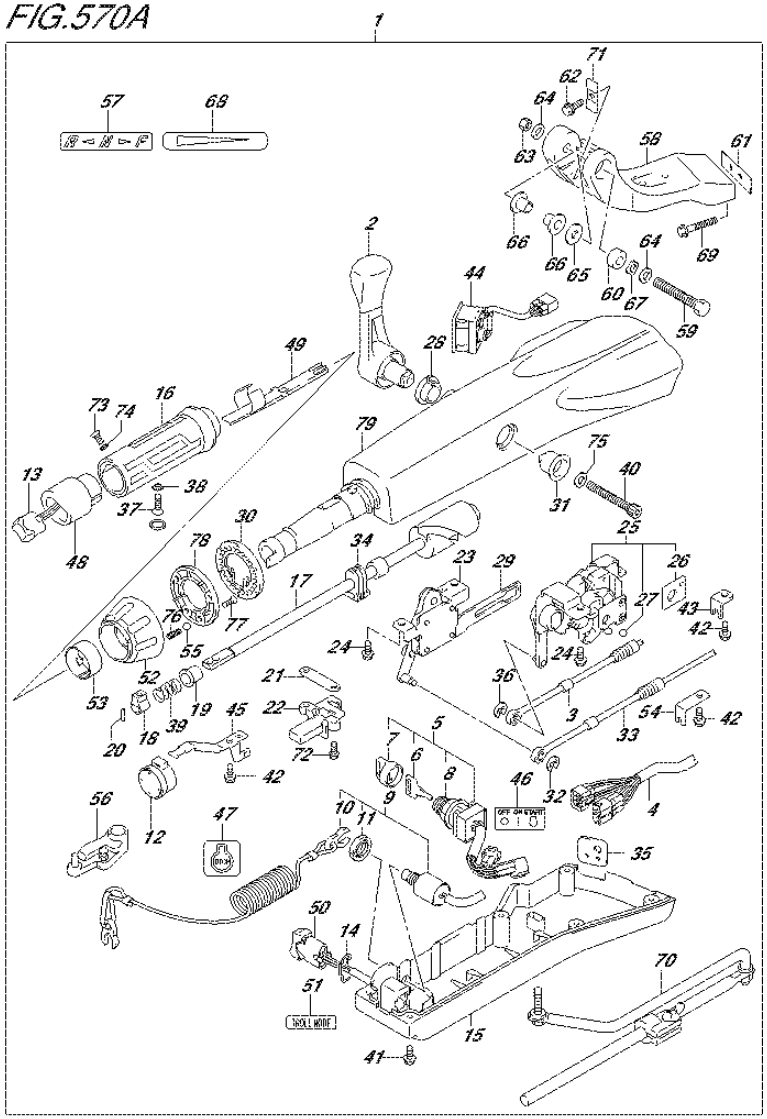

FIG.570A (3-E-5) OPT:TILLER HANDLE (DF70A E01)

REF NO.	PART NO.	DESCRIPTION	Q'TY	REMARKS
1	63002-87L12-0EP	KIT TILLER HANDLE (BLACK)	1	
2	21110-88L00	.LEVER, SHIFT	1	
3	23230-90J10	.CABLE, SHIFT	1	
4	36620-87L00	.WIRE ASSY, HARNESS	1	
5	37110-87L01	.SWITCH ASSY, IGNITION	1	
6-1	37141-99E00	..KEY (931)	1	
6-2	37141-99E10	..KEY (932)	1	
6-3	37141-99E20	..KEY (933)	1	
6-4	37141-99E30	..KEY (934)	1	
6-5	37141-99E40	..KEY (935)	1	
6-6	37141-99E50	..KEY (936)	1	
6-7	37141-99E60	..KEY (937)	1	
6-8	37141-99E70	..KEY (938)	1	
6-9	37141-99E80	..KEY (939)	1	
6-10	37141-99E90	..KEY (940)	1	
6-11	37141-99EA0	..KEY (941)	1	
6-12	37141-99EB0	..KEY (942)	1	
7	37143-99E00	..CAP, KEY	1	
8	37149-93J00	..CAP, CYLINDER BODY	1	
9	37820-87L01	.SWITCH ASSY, EMERGENCY	1	
10	37823-92E01	..PLATE, LOCK	1	
11	37826-92J00	..NUT	1	
12	38500-93J90	.BUZZER	1	
13	37850-87L00	.SWITCH ASSY, PTT	1	
14	37852-87J00	.PLATE, TRIM SWITCH	1	
15	63121-88L00	.COVER, UNDER	1	
16	63210-88L00	.GRIP, HANDLE	1	
17	63221-88L00	.SHAFT, THROTTLE	1	
18	63223-92D00	.STOPPER, HANDLE ROD	1	
19	63225-88L00	.BUSH, HANDLE ROD	1	
20	63227-93200	.PIN, HANDLE ROD	1	
21	63235-88L00	.PLATE, THROTTLE SHAFT	1	
22	63246-88L00	.STOPPER THROTTLE ADJ	1	
23	63250-88L00	.ARM ASSY, THROTTLE	1	

FIG.570A

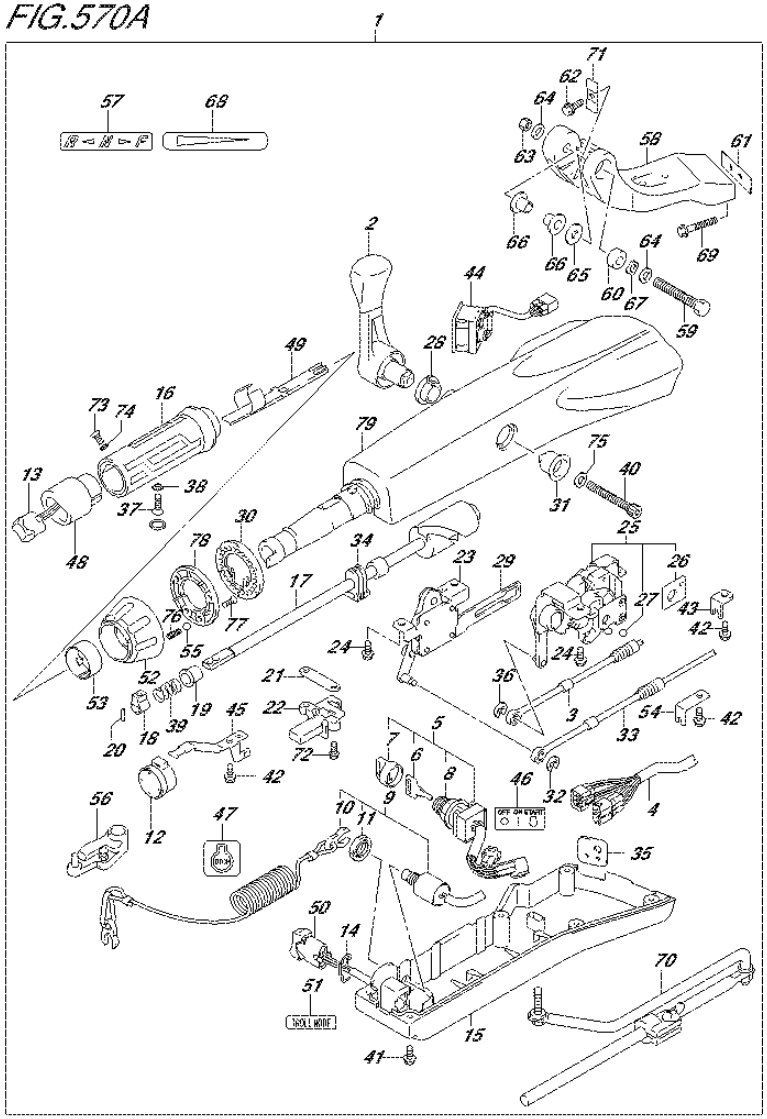

FIG.570A (3-E-6) OPT:TILLER HANDLE (DF70A E01)

REF NO.	PART NO.	DESCRIPTION	Q'TY	REMARKS
24	63251-87J00	.BOLT, SHIFT GEAR ASSY	4	
25	63260-88L00	.GEAR ASSY, SHIFT	1	
26	63272-87J00	..PLATE, BALL GUIDE	1	
27	63273-87J00	..BALL	1	
28	63262-87J00	.BUSH, SHIFT LEVER	1	
29	63271-87J00	.PLATE, LOCK	1	
30	63248-99J00	.PLATE, THROTTLE ADJ NOTCH	1	
31	63261-87J00	.BUSH, SHIFT GEAR	1	
32	63274-87J00	.E RING	1	
33	63610-87J00	.CABLE, THROTTLE	1	
34	37853-88L90	.GROMMET, PTT SWITCH LEAD	1	
35	63626-88L00	.GROMMET, WIRE HARNESS	1	
36	67292-87J00	.E RING	2	
37	09126-06015	.SCREW (6X23)	1	
38	09163-06001	.LOCK WASHER	1	
39	09440-12027	.SPRING	1	
40	21112-88L00	.BOLT SHIFT LEVER	1	
41	09125-05047	.SCREW (5X14)	6	
42	63611-88L00	.BOLT CLAMP BRACKET	3	
43	63612-87J00	.BRACKET, CLAMP	1	
44	34200-87L00	.TACHOMETER ASSY, WITH MONITOR	1	
45	36617-88L90	.CLAMP PLATE, MAIN HARNESS	1	
46	37112-88L90	.LABEL, IGNITION SWITCH	1	
47	37835-95D00	.LABEL, STOP	1	
48	37851-88L90	.BASE, PTT SWITCH	1	
49	37852-88L90	.HARNESS, GUIDE	1	
50	37861-87L10	.SWITCH, TROLLING CONTROL	1	
51	37864-88L90	.LABEL, TROLL MODE	1	
52	63244-99J00	.KNOB, THROTTLE ADJ	1	
53	63245-99J00	.BUSH, THROTTLE ADJ	1	
54	63612-88L10	.BRACKET, CLAMP SHIFT	1	
55	09260-10006	.BALL	1	
56	19120-87L10	.LEVER, THROTTLE	1	
57	21131-88L00	.MARK, CLUTCH SHIFT	1	

FIG.570A

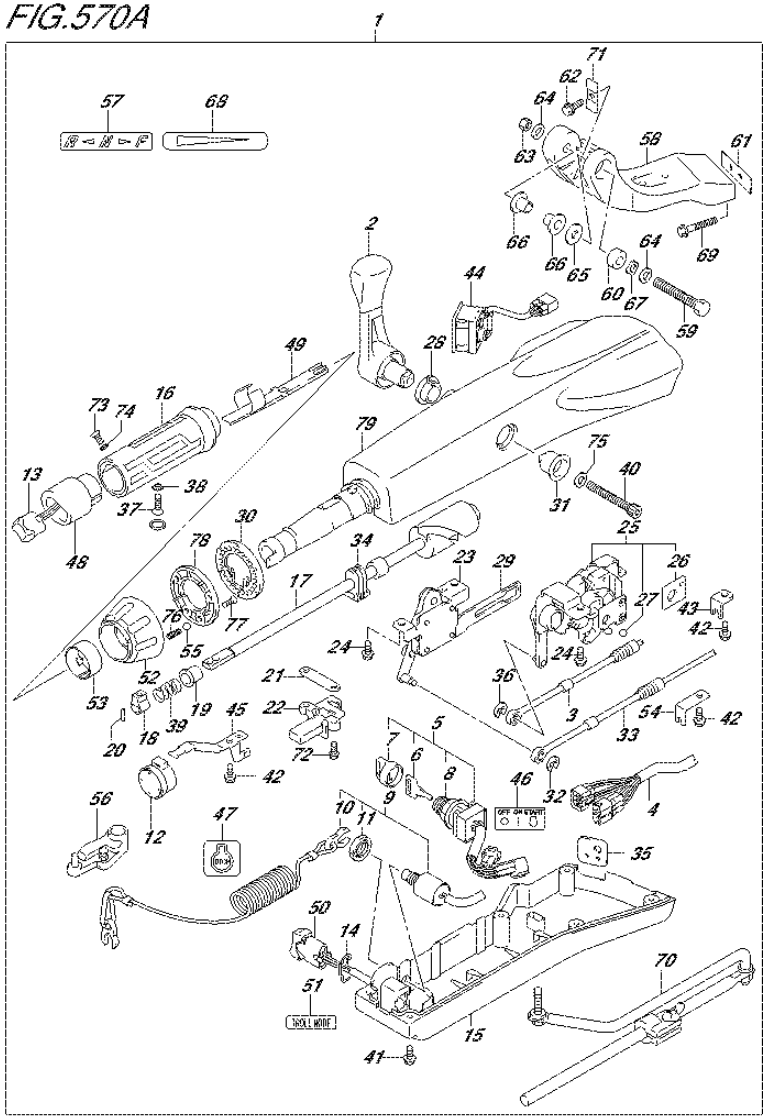

FIG.570A (3-E-7) OPT:TILLER HANDLE (DF70A E01)

REF NO.	PART NO.	DESCRIPTION	Q'TY	REMARKS
58	43761-88L01-0EP	.BRACKET, TILLER HANDLE (BLACK)	1	
59	43762-88L00	.BOLT TILLER HANDLE PIVOT	1	
60	43768-88L00	.SPACER, TILLER HANDLE	1	
61	43776-87L00	.SPACER, STRG BRKT	1	
62	09116-08137	.BOLT (8X22)	1	
63	09159-12014	.NUT	1	
64	09160-12066	.WASHER (12.5X22X2.5)	2	
65	09160-12124	.WASHER (12.5X32X1.5)	1	
66	63115-88L00	.BUSH, TILLER HANDLE	2	
67	09164-13010	.WASHER	1	
68	63215-93110	.MARK, HANDLE GRIP	1	
69	09116-10150	.BOLT (10X55)	2	
70	43770-99E03	.ADJUSTER ASSY, STEERING	1	
71	63132-88L00	.STOPPER, TILLER HANDLE	1	
72	63251-88L90	.BOLT	2	
73	37855-88L90	.SCREW,THROTTLE GRIP	1	
74	37854-88L90	.WASHER,THROTTLE GRIP	1	
75	63258-88L00	.WASHER	1	
76	09440-06037	.SPRING	1	
77	03522-05169	.SCREW	3	
78	63247-99J00	.PLATE,THROTTLE ADJ KNOB	1	
79	63111-88L00-0EP	.HOUSING, TILLER HANDLE	1	

FIG.570B

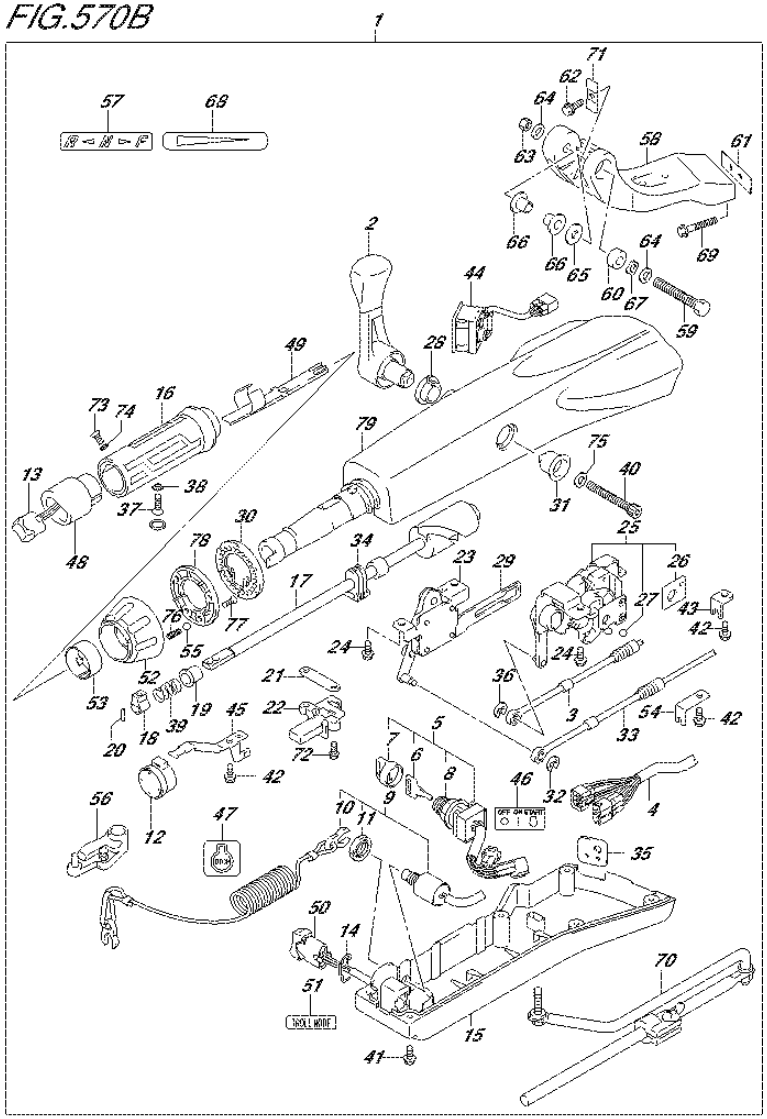

FIG.570B (3-E-8) OPT:TILLER HANDLE (DF70A E40)

REF NO.	PART NO.	DESCRIPTION	Q'TY	REMARKS
1	63002-87L12-0EP	KIT TILLER HANDLE (BLACK)	1	
2	21110-88L00	.LEVER, SHIFT	1	
3	23230-90J10	.CABLE, SHIFT	1	
4	36620-87L00	.WIRE ASSY, HARNESS	1	
5	37110-87L01	.SWITCH ASSY, IGNITION	1	
6-1	37141-99E00	..KEY (931)	1	
6-2	37141-99E10	..KEY (932)	1	
6-3	37141-99E20	..KEY (933)	1	
6-4	37141-99E30	..KEY (934)	1	
6-5	37141-99E40	..KEY (935)	1	
6-6	37141-99E50	..KEY (936)	1	
6-7	37141-99E60	..KEY (937)	1	
6-8	37141-99E70	..KEY (938)	1	
6-9	37141-99E80	..KEY (939)	1	
6-10	37141-99E90	..KEY (940)	1	
6-11	37141-99EA0	..KEY (941)	1	
6-12	37141-99EB0	..KEY (942)	1	
7	37143-99E00	..CAP, KEY	1	
8	37149-93J00	..CAP, CYLINDER BODY	1	
9	37820-87L01	.SWITCH ASSY, EMERGENCY	1	
10	37823-92E01	..PLATE, LOCK	1	
11	37826-92J00	..NUT	1	
12	38500-93J90	.BUZZER	1	
13	37850-87L00	.SWITCH ASSY, PTT	1	
14	37852-87J00	.PLATE, TRIM SWITCH	1	
15	63121-88L00	.COVER, UNDER	1	
16	63210-88L00	.GRIP, HANDLE	1	
17	63221-88L00	.SHAFT, THROTTLE	1	
18	63223-92D00	.STOPPER, HANDLE ROD	1	
19	63225-88L00	.BUSH, HANDLE ROD	1	
20	63227-93200	.PIN, HANDLE ROD	1	
21	63235-88L00	.PLATE, THROTTLE SHAFT	1	
22	63246-88L00	.STOPPER THROTTLE ADJ	1	
23	63250-88L00	.ARM ASSY, THROTTLE	1	

FIG.570B

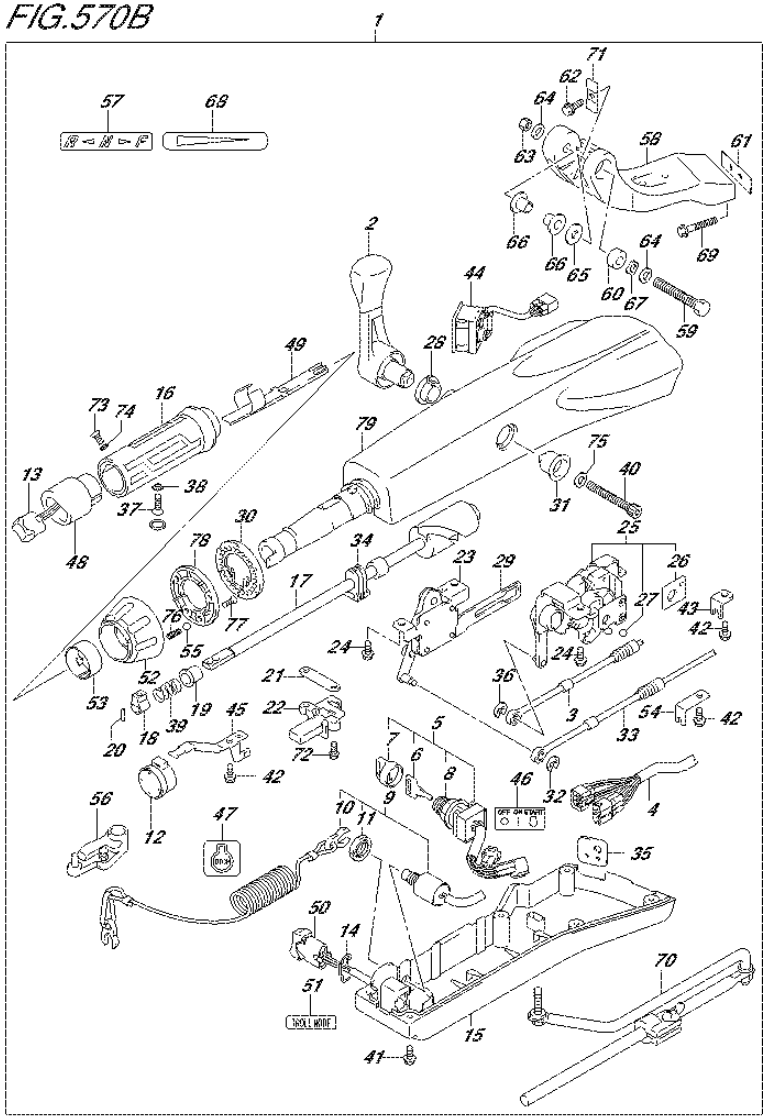

FIG.570B (3-E-9) OPT:TILLER HANDLE (DF70A E40)

REF NO.	PART NO.	DESCRIPTION	Q'TY	REMARKS
24	63251-87J00	.BOLT, SHIFT GEAR ASSY	4	
25	63260-88L00	.GEAR ASSY, SHIFT	1	
26	63272-87J00	..PLATE, BALL GUIDE	1	
27	63273-87J00	..BALL	1	
28	63262-87J00	.BUSH, SHIFT LEVER	1	
29	63271-87J00	.PLATE, LOCK	1	
30	63248-99J00	.PLATE, THROTTLE ADJ NOTCH	1	
31	63261-87J00	.BUSH, SHIFT GEAR	1	
32	63274-87J00	.E RING	1	
33	63610-87J00	.CABLE, THROTTLE	1	
34	37853-88L90	.GROMMET, PTT SWITCH LEAD	1	
35	63626-88L00	.GROMMET, WIRE HARNESS	1	
36	67292-87J00	.E RING	2	
37	09126-06015	.SCREW (6X23)	1	
38	09163-06001	.LOCK WASHER	1	
39	09440-12027	.SPRING	1	
40	21112-88L00	.BOLT SHIFT LEVER	1	
41	09125-05047	.SCREW (5X14)	6	
42	63611-88L00	.BOLT CLAMP BRACKET	3	
43	63612-87J00	.BRACKET, CLAMP	1	
44	34200-87L00	.TACHOMETER ASSY, WITH MONITOR	1	
45	36617-88L90	.CLAMP PLATE, MAIN HARNESS	1	
46	37112-88L90	.LABEL, IGNITION SWITCH	1	
47	37835-95D00	.LABEL, STOP	1	
48	37851-88L90	.BASE, PTT SWITCH	1	
49	37852-88L90	.HARNESS, GUIDE	1	
50	37861-87L10	.SWITCH, TROLLING CONTROL	1	
51	37864-88L90	.LABEL, TROLL MODE	1	
52	63244-99J00	.KNOB, THROTTLE ADJ	1	
53	63245-99J00	.BUSH, THROTTLE ADJ	1	
54	63612-88L10	.BRACKET, CLAMP SHIFT	1	
55	09260-10006	.BALL	1	
56	19120-87L10	.LEVER, THROTTLE	1	
57	21131-88L00	.MARK, CLUTCH SHIFT	1	

FIG.570B

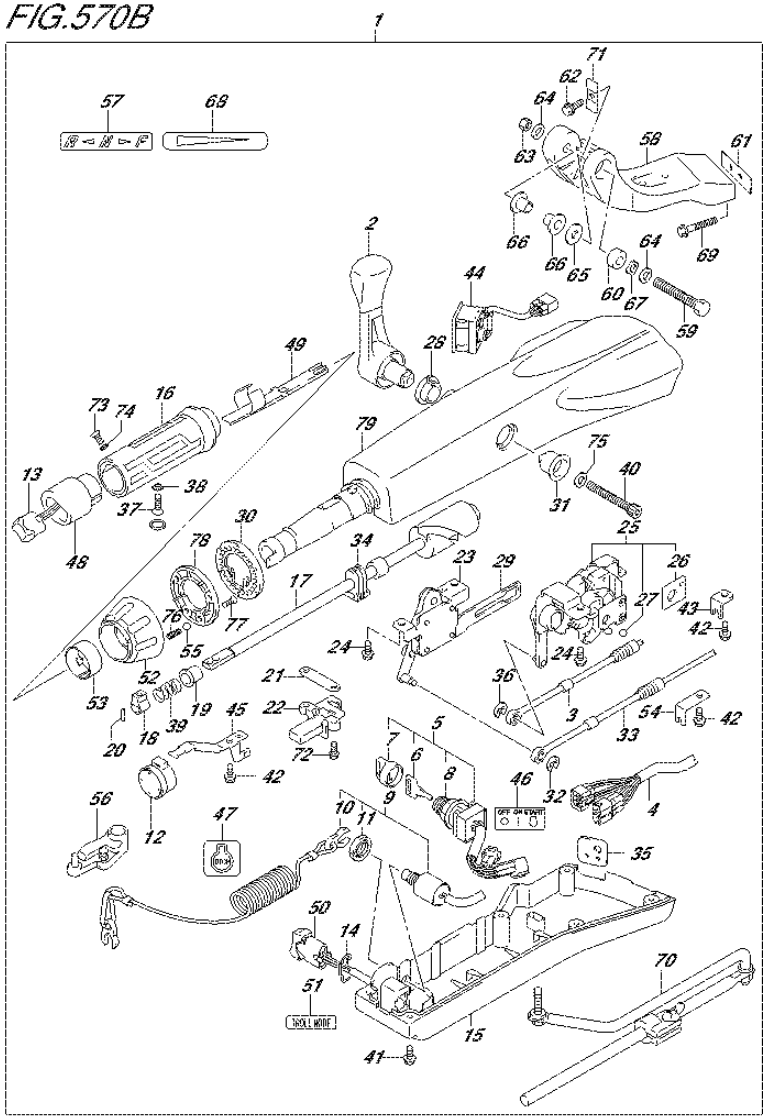

FIG.570B (3-E-10) OPT:TILLER HANDLE (DF70A E40)

REF NO.	PART NO.	DESCRIPTION	Q'TY	REMARKS
58	43761-88L01-0EP	.BRACKET, TILLER HANDLE (BLACK)	1	
59	43762-88L00	.BOLT TILLER HANDLE PIVOT	1	
60	43768-88L00	.SPACER, TILLER HANDLE	1	
61	43776-87L00	.SPACER, STRG BRKT	1	
62	09116-08137	.BOLT (8X22)	1	
63	09159-12014	.NUT	1	
64	09160-12066	.WASHER (12.5X22X2.5)	2	
65	09160-12124	.WASHER (12.5X32X1.5)	1	
66	63115-88L00	.BUSH, TILLER HANDLE	2	
67	09164-13010	.WASHER	1	
68	63215-93110	.MARK, HANDLE GRIP	1	
69	09116-10150	.BOLT (10X55)	2	
70	43770-99E03	.ADJUSTER ASSY, STEERING	1	
71	63132-88L00	.STOPPER, TILLER HANDLE	1	
72	63251-88L90	.BOLT	2	
73	37855-88L90	.SCREW,THROTTLE GRIP	1	
74	37854-88L90	.WASHER,THROTTLE GRIP	1	
75	63258-88L00	.WASHER	1	
76	09440-06037	.SPRING	1	
77	03522-05169	.SCREW	3	
78	63247-99J00	.PLATE,THROTTLE ADJ KNOB	1	
79	63111-88L00-0EP	.HOUSING, TILLER HANDLE	1	

FIG.570C

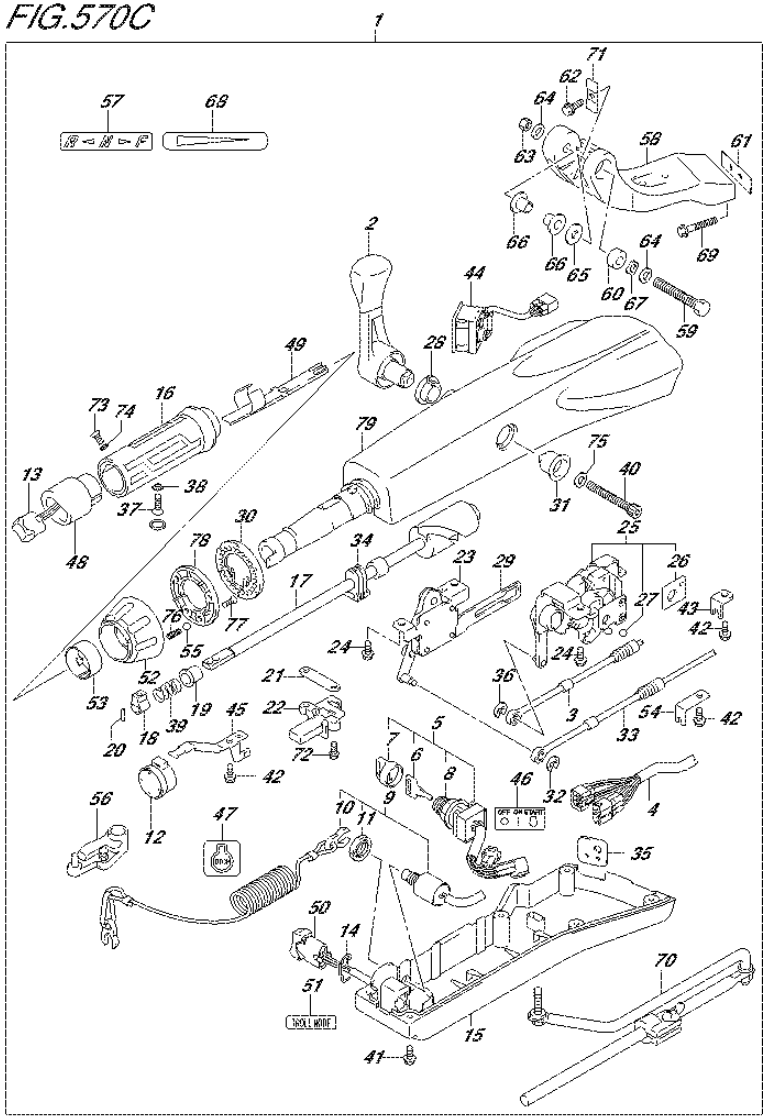

FIG.570C (3-E-11) OPT:TILLER HANDLE (DF80A E01)

REF NO.	PART NO.	DESCRIPTION	Q'TY	REMARKS
1	63002-87L12-0EP	KIT TILLER HANDLE (BLACK)	1	
2	21110-88L00	.LEVER, SHIFT	1	
3	23230-90J10	.CABLE, SHIFT	1	
4	36620-87L00	.WIRE ASSY, HARNESS	1	
5	37110-87L01	.SWITCH ASSY, IGNITION	1	
6-1	37141-99E00	..KEY (931)	1	
6-2	37141-99E10	..KEY (932)	1	
6-3	37141-99E20	..KEY (933)	1	
6-4	37141-99E30	..KEY (934)	1	
6-5	37141-99E40	..KEY (935)	1	
6-6	37141-99E50	..KEY (936)	1	
6-7	37141-99E60	..KEY (937)	1	
6-8	37141-99E70	..KEY (938)	1	
6-9	37141-99E80	..KEY (939)	1	
6-10	37141-99E90	..KEY (940)	1	
6-11	37141-99EA0	..KEY (941)	1	
6-12	37141-99EB0	..KEY (942)	1	
7	37143-99E00	..CAP, KEY	1	
8	37149-93J00	..CAP, CYLINDER BODY	1	
9	37820-87L01	.SWITCH ASSY, EMERGENCY	1	
10	37823-92E01	..PLATE, LOCK	1	
11	37826-92J00	..NUT	1	
12	38500-93J90	.BUZZER	1	
13	37850-87L00	.SWITCH ASSY, PTT	1	
14	37852-87J00	.PLATE, TRIM SWITCH	1	
15	63121-88L00	.COVER, UNDER	1	
16	63210-88L00	.GRIP, HANDLE	1	
17	63221-88L00	.SHAFT, THROTTLE	1	
18	63223-92D00	.STOPPER, HANDLE ROD	1	
19	63225-88L00	.BUSH, HANDLE ROD	1	
20	63227-93200	.PIN, HANDLE ROD	1	
21	63235-88L00	.PLATE, THROTTLE SHAFT	1	
22	63246-88L00	.STOPPER THROTTLE ADJ	1	
23	63250-88L00	.ARM ASSY, THROTTLE	1	

FIG.570C

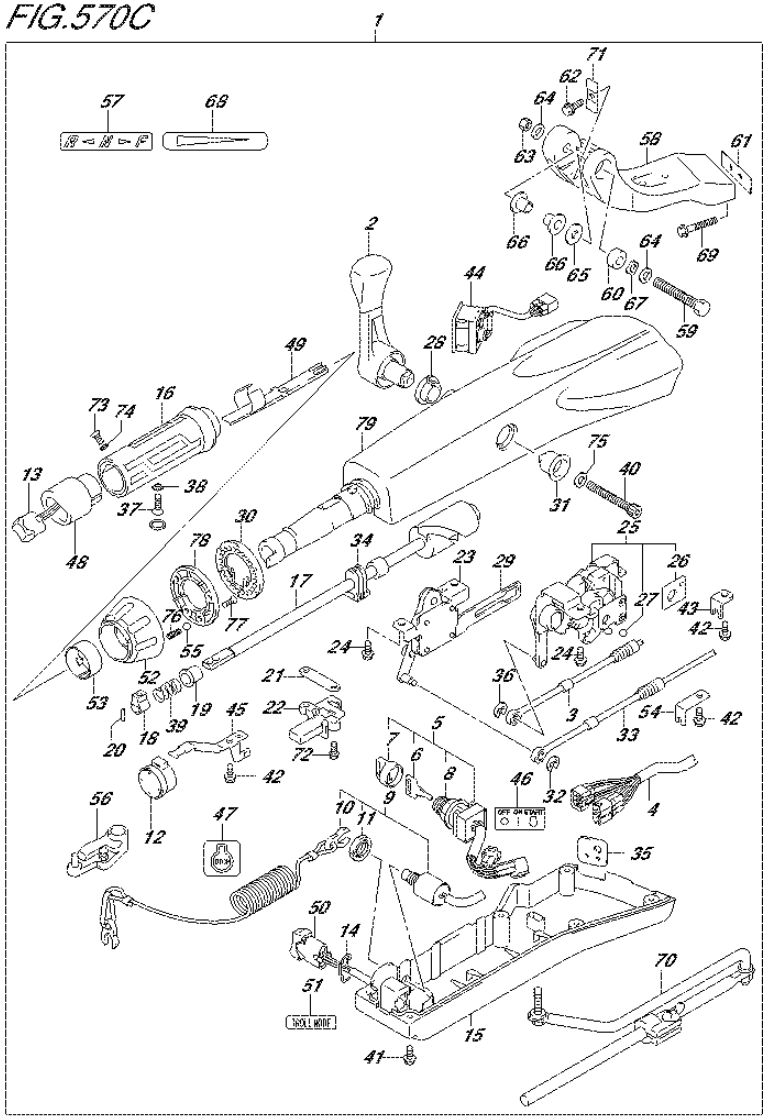

FIG.570C (3-E-12) OPT:TILLER HANDLE (DF80A E01)

REF NO.	PART NO.	DESCRIPTION	Q'TY	REMARKS
24	63251-87J00	.BOLT, SHIFT GEAR ASSY	4	
25	63260-88L00	.GEAR ASSY, SHIFT	1	
26	63272-87J00	..PLATE, BALL GUIDE	1	
27	63273-87J00	..BALL	1	
28	63262-87J00	.BUSH, SHIFT LEVER	1	
29	63271-87J00	.PLATE, LOCK	1	
30	63248-99J00	.PLATE, THROTTLE ADJ NOTCH	1	
31	63261-87J00	.BUSH, SHIFT GEAR	1	
32	63274-87J00	.E RING	1	
33	63610-87J00	.CABLE, THROTTLE	1	
34	37853-88L90	.GROMMET, PTT SWITCH LEAD	1	
35	63626-88L00	.GROMMET, WIRE HARNESS	1	
36	67292-87J00	.E RING	2	
37	09126-06015	.SCREW (6X23)	1	
38	09163-06001	.LOCK WASHER	1	
39	09440-12027	.SPRING	1	
40	21112-88L00	.BOLT SHIFT LEVER	1	
41	09125-05047	.SCREW (5X14)	6	
42	63611-88L00	.BOLT CLAMP BRACKET	3	
43	63612-87J00	.BRACKET, CLAMP	1	
44	34200-87L00	.TACHOMETER ASSY, WITH MONITOR	1	
45	36617-88L90	.CLAMP PLATE, MAIN HARNESS	1	
46	37112-88L90	.LABEL, IGNITION SWITCH	1	
47	37835-95D00	.LABEL, STOP	1	
48	37851-88L90	.BASE, PTT SWITCH	1	
49	37852-88L90	.HARNESS, GUIDE	1	
50	37861-87L10	.SWITCH, TROLLING CONTROL	1	
51	37864-88L90	.LABEL, TROLL MODE	1	
52	63244-99J00	.KNOB, THROTTLE ADJ	1	
53	63245-99J00	.BUSH, THROTTLE ADJ	1	
54	63612-88L10	.BRACKET, CLAMP SHIFT	1	
55	09260-10006	.BALL	1	
56	19120-87L10	.LEVER, THROTTLE	1	
57	21131-88L00	.MARK, CLUTCH SHIFT	1	

FIG.570C

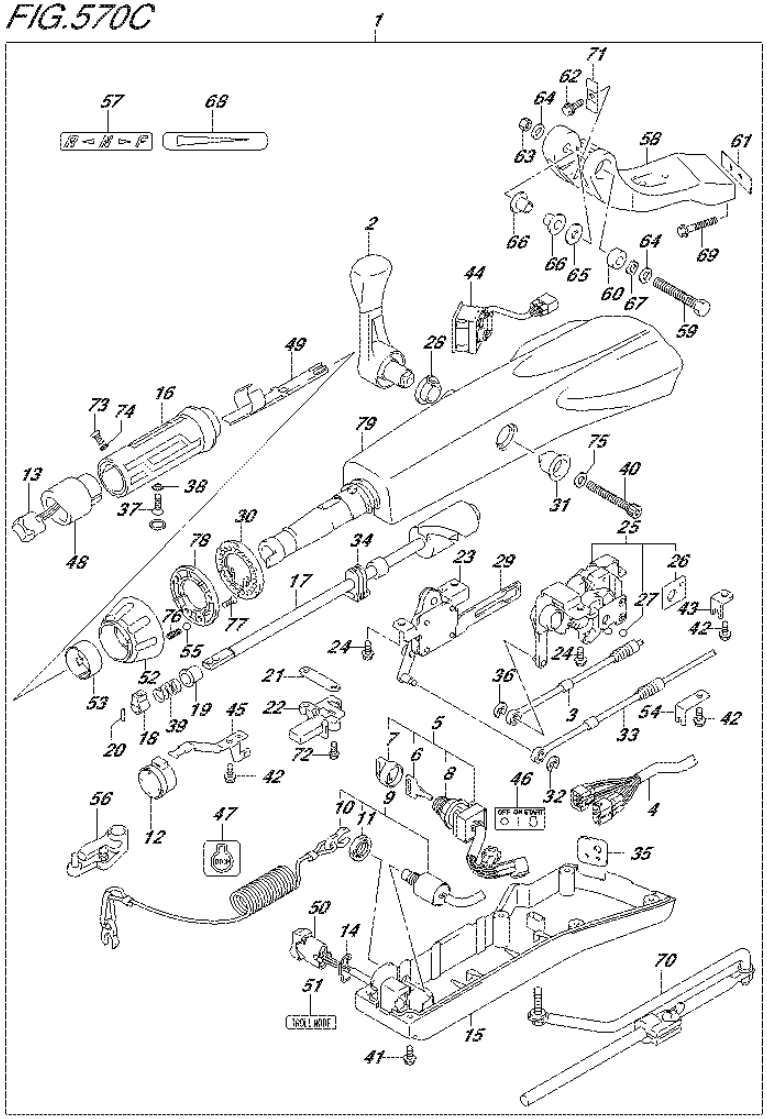

FIG.570C (3-E-13) OPT:TILLER HANDLE (DF80A E01)

REF NO.	PART NO.	DESCRIPTION	Q'TY	REMARKS
58	43761-88L01-0EP	.BRACKET, TILLER HANDLE (BLACK)	1	
59	43762-88L00	.BOLT TILLER HANDLE PIVOT	1	
60	43768-88L00	.SPACER, TILLER HANDLE	1	
61	43776-87L00	.SPACER, STRG BRKT	1	
62	09116-08137	.BOLT (8X22)	1	
63	09159-12014	.NUT	1	
64	09160-12066	.WASHER (12.5X22X2.5)	2	
65	09160-12124	.WASHER (12.5X32X1.5)	1	
66	63115-88L00	.BUSH, TILLER HANDLE	2	
67	09164-13010	.WASHER	1	
68	63215-93110	.MARK, HANDLE GRIP	1	
69	09116-10150	.BOLT (10X55)	2	
70	43770-99E03	.ADJUSTER ASSY, STEERING	1	
71	63132-88L00	.STOPPER, TILLER HANDLE	1	
72	63251-88L90	.BOLT	2	
73	37855-88L90	.SCREW,THROTTLE GRIP	1	
74	37854-88L90	.WASHER,THROTTLE GRIP	1	
75	63258-88L00	.WASHER	1	
76	09440-06037	.SPRING	1	
77	03522-05169	.SCREW	3	
78	63247-99J00	.PLATE,THROTTLE ADJ KNOB	1	
79	63111-88L00-0EP	.HOUSING, TILLER HANDLE	1	

FIG.570D

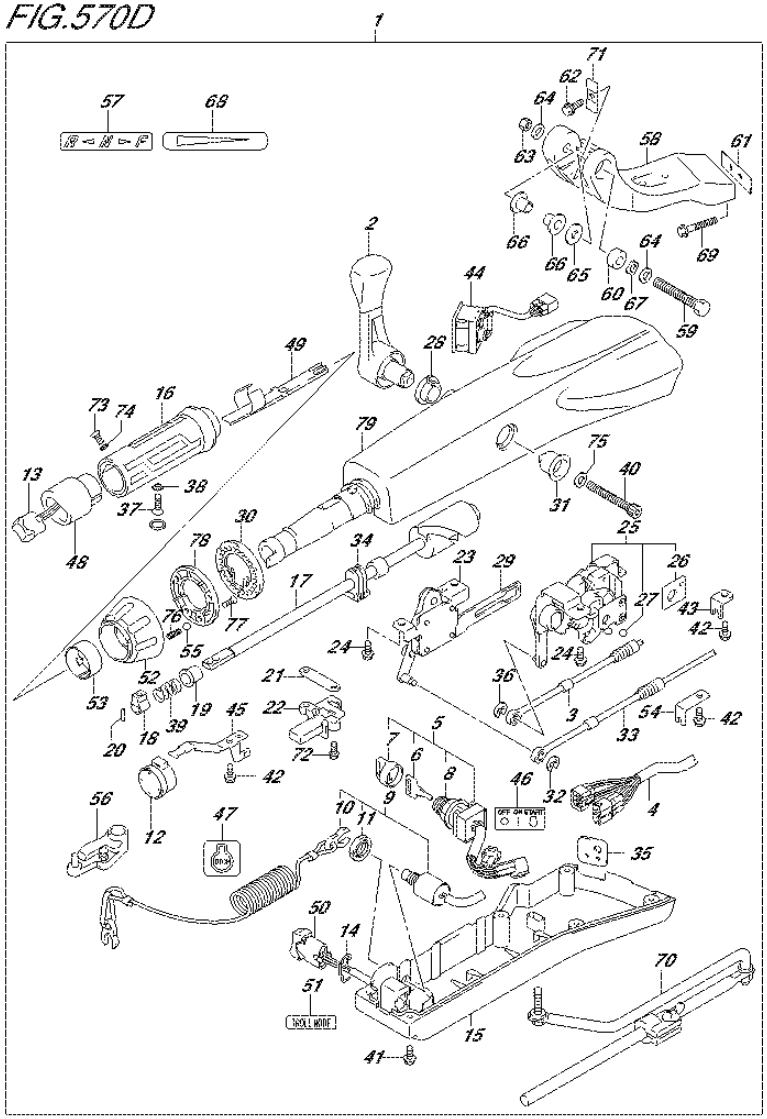

FIG.570D (3-E-14) OPT:TILLER HANDLE (DF80A E40)

REF NO.	PART NO.	DESCRIPTION	Q'TY	REMARKS
1	63002-87L12-0EP	KIT TILLER HANDLE (BLACK)	1	
2	21110-88L00	.LEVER, SHIFT	1	
3	23230-90J10	.CABLE, SHIFT	1	
4	36620-87L00	.WIRE ASSY, HARNESS	1	
5	37110-87L01	.SWITCH ASSY, IGNITION	1	
6-1	37141-99E00	..KEY (931)	1	
6-2	37141-99E10	..KEY (932)	1	
6-3	37141-99E20	..KEY (933)	1	
6-4	37141-99E30	..KEY (934)	1	
6-5	37141-99E40	..KEY (935)	1	
6-6	37141-99E50	..KEY (936)	1	
6-7	37141-99E60	..KEY (937)	1	
6-8	37141-99E70	..KEY (938)	1	
6-9	37141-99E80	..KEY (939)	1	
6-10	37141-99E90	..KEY (940)	1	
6-11	37141-99EA0	..KEY (941)	1	
6-12	37141-99EB0	..KEY (942)	1	
7	37143-99E00	..CAP, KEY	1	
8	37149-93J00	..CAP, CYLINDER BODY	1	
9	37820-87L01	.SWITCH ASSY, EMERGENCY	1	
10	37823-92E01	..PLATE, LOCK	1	
11	37826-92J00	..NUT	1	
12	38500-93J90	.BUZZER	1	
13	37850-87L00	.SWITCH ASSY, PTT	1	
14	37852-87J00	.PLATE, TRIM SWITCH	1	
15	63121-88L00	.COVER, UNDER	1	
16	63210-88L00	.GRIP, HANDLE	1	
17	63221-88L00	.SHAFT, THROTTLE	1	
18	63223-92D00	.STOPPER, HANDLE ROD	1	
19	63225-88L00	.BUSH, HANDLE ROD	1	
20	63227-93200	.PIN, HANDLE ROD	1	
21	63235-88L00	.PLATE, THROTTLE SHAFT	1	
22	63246-88L00	.STOPPER THROTTLE ADJ	1	
23	63250-88L00	.ARM ASSY, THROTTLE	1	

FIG.570D

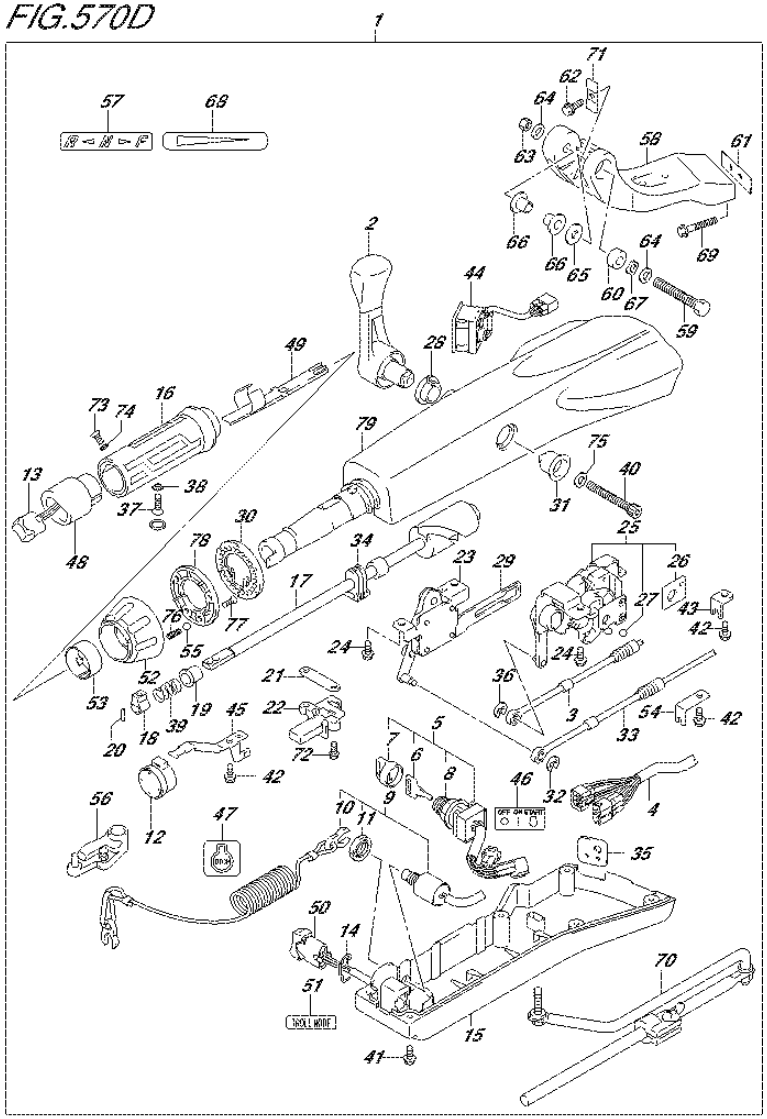

FIG.570D (3-E-15) OPT:TILLER HANDLE (DF80A E40)

REF NO.	PART NO.	DESCRIPTION	Q'TY	REMARKS
24	63251-87J00	.BOLT, SHIFT GEAR ASSY	4	
25	63260-88L00	.GEAR ASSY, SHIFT	1	
26	63272-87J00	..PLATE, BALL GUIDE	1	
27	63273-87J00	..BALL	1	
28	63262-87J00	.BUSH, SHIFT LEVER	1	
29	63271-87J00	.PLATE, LOCK	1	
30	63248-99J00	.PLATE, THROTTLE ADJ NOTCH	1	
31	63261-87J00	.BUSH, SHIFT GEAR	1	
32	63274-87J00	.E RING	1	
33	63610-87J00	.CABLE, THROTTLE	1	
34	37853-88L90	.GROMMET, PTT SWITCH LEAD	1	
35	63626-88L00	.GROMMET, WIRE HARNESS	1	
36	67292-87J00	.E RING	2	
37	09126-06015	.SCREW (6X23)	1	
38	09163-06001	.LOCK WASHER	1	
39	09440-12027	.SPRING	1	
40	21112-88L00	.BOLT SHIFT LEVER	1	
41	09125-05047	.SCREW (5X14)	6	
42	63611-88L00	.BOLT CLAMP BRACKET	3	
43	63612-87J00	.BRACKET, CLAMP	1	
44	34200-87L00	.TACHOMETER ASSY, WITH MONITOR	1	
45	36617-88L90	.CLAMP PLATE, MAIN HARNESS	1	
46	37112-88L90	.LABEL, IGNITION SWITCH	1	
47	37835-95D00	.LABEL, STOP	1	
48	37851-88L90	.BASE, PTT SWITCH	1	
49	37852-88L90	.HARNESS, GUIDE	1	
50	37861-87L10	.SWITCH, TROLLING CONTROL	1	
51	37864-88L90	.LABEL, TROLL MODE	1	
52	63244-99J00	.KNOB, THROTTLE ADJ	1	
53	63245-99J00	.BUSH, THROTTLE ADJ	1	
54	63612-88L10	.BRACKET, CLAMP SHIFT	1	
55	09260-10006	.BALL	1	
56	19120-87L10	.LEVER, THROTTLE	1	
57	21131-88L00	.MARK, CLUTCH SHIFT	1	

FIG.570D

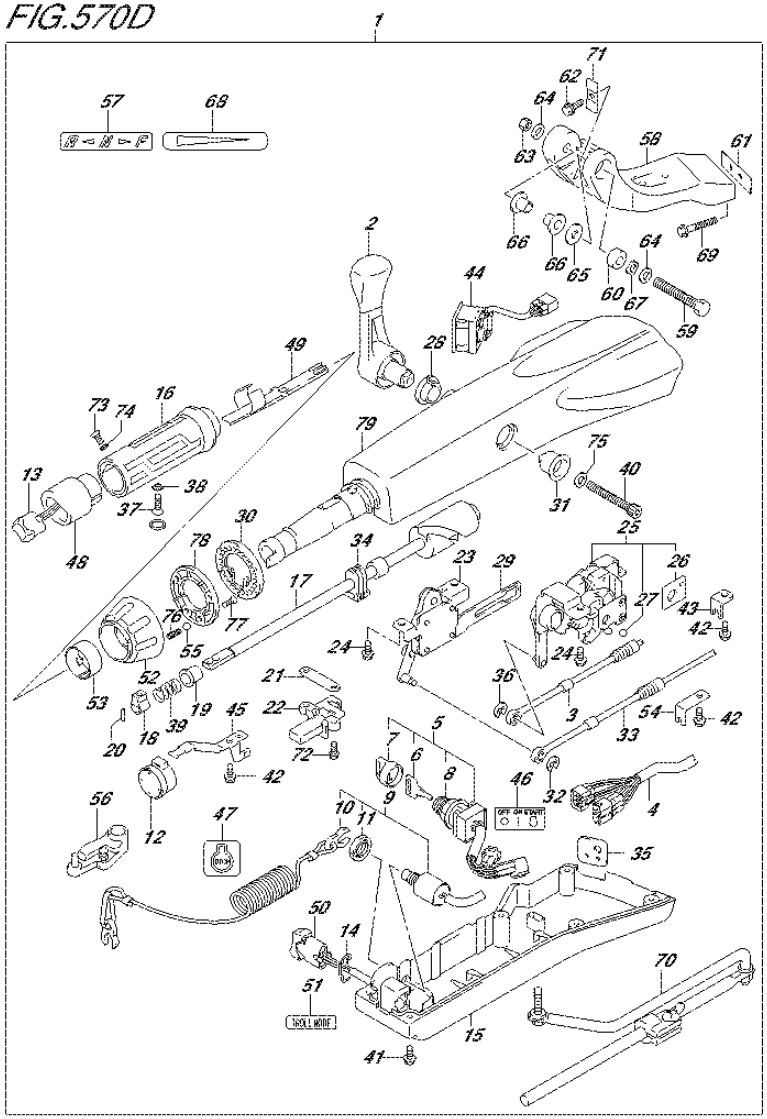

FIG.570D (3-F-2) OPT:TILLER HANDLE (DF80A E40)

REF NO.	PART NO.	DESCRIPTION	Q'TY	REMARKS
58	43761-88L01-0EP	.BRACKET, TILLER HANDLE (BLACK)	1	
59	43762-88L00	.BOLT TILLER HANDLE PIVOT	1	
60	43768-88L00	.SPACER, TILLER HANDLE	1	
61	43776-87L00	.SPACER, STRG BRKT	1	
62	09116-08137	.BOLT (8X22)	1	
63	09159-12014	.NUT	1	
64	09160-12066	.WASHER (12.5X22X2.5)	2	
65	09160-12124	.WASHER (12.5X32X1.5)	1	
66	63115-88L00	.BUSH, TILLER HANDLE	2	
67	09164-13010	.WASHER	1	
68	63215-93110	.MARK, HANDLE GRIP	1	
69	09116-10150	.BOLT (10X55)	2	
70	43770-99E03	.ADJUSTER ASSY, STEERING	1	
71	63132-88L00	.STOPPER, TILLER HANDLE	1	
72	63251-88L90	.BOLT	2	
73	37855-88L90	.SCREW,THROTTLE GRIP	1	
74	37854-88L90	.WASHER,THROTTLE GRIP	1	
75	63258-88L00	.WASHER	1	
76	09440-06037	.SPRING	1	
77	03522-05169	.SCREW	3	
78	63247-99J00	.PLATE,THROTTLE ADJ KNOB	1	
79	63111-88L00-0EP	.HOUSING, TILLER HANDLE	1	

FIG.570E

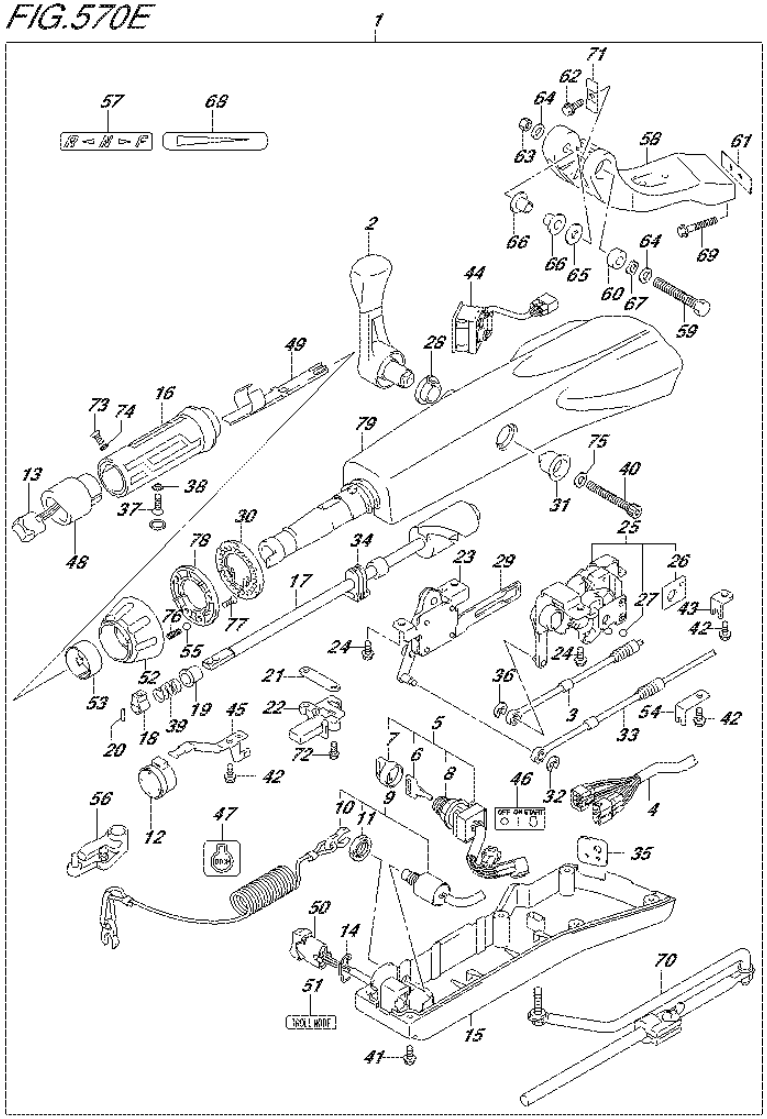

FIG.570E (3-F-3) OPT:TILLER HANDLE (DF90A E01)

REF NO.	PART NO.	DESCRIPTION	Q'TY	REMARKS
1	63002-87L12-0EP	KIT TILLER HANDLE (BLACK)	1	
2	21110-88L00	.LEVER, SHIFT	1	
3	23230-90J10	.CABLE, SHIFT	1	
4	36620-87L00	.WIRE ASSY, HARNESS	1	
5	37110-87L01	.SWITCH ASSY, IGNITION	1	
6-1	37141-99E00	..KEY (931)	1	
6-2	37141-99E10	..KEY (932)	1	
6-3	37141-99E20	..KEY (933)	1	
6-4	37141-99E30	..KEY (934)	1	
6-5	37141-99E40	..KEY (935)	1	
6-6	37141-99E50	..KEY (936)	1	
6-7	37141-99E60	..KEY (937)	1	
6-8	37141-99E70	..KEY (938)	1	
6-9	37141-99E80	..KEY (939)	1	
6-10	37141-99E90	..KEY (940)	1	
6-11	37141-99EA0	..KEY (941)	1	
6-12	37141-99EB0	..KEY (942)	1	
7	37143-99E00	..CAP, KEY	1	
8	37149-93J00	..CAP, CYLINDER BODY	1	
9	37820-87L01	.SWITCH ASSY, EMERGENCY	1	
10	37823-92E01	..PLATE, LOCK	1	
11	37826-92J00	..NUT	1	
12	38500-93J90	.BUZZER	1	
13	37850-87L00	.SWITCH ASSY, PTT	1	
14	37852-87J00	.PLATE, TRIM SWITCH	1	
15	63121-88L00	.COVER, UNDER	1	
16	63210-88L00	.GRIP, HANDLE	1	
17	63221-88L00	.SHAFT, THROTTLE	1	
18	63223-92D00	.STOPPER, HANDLE ROD	1	
19	63225-88L00	.BUSH, HANDLE ROD	1	
20	63227-93200	.PIN, HANDLE ROD	1	
21	63235-88L00	.PLATE, THROTTLE SHAFT	1	
22	63246-88L00	.STOPPER THROTTLE ADJ	1	
23	63250-88L00	.ARM ASSY, THROTTLE	1	

FIG.570E

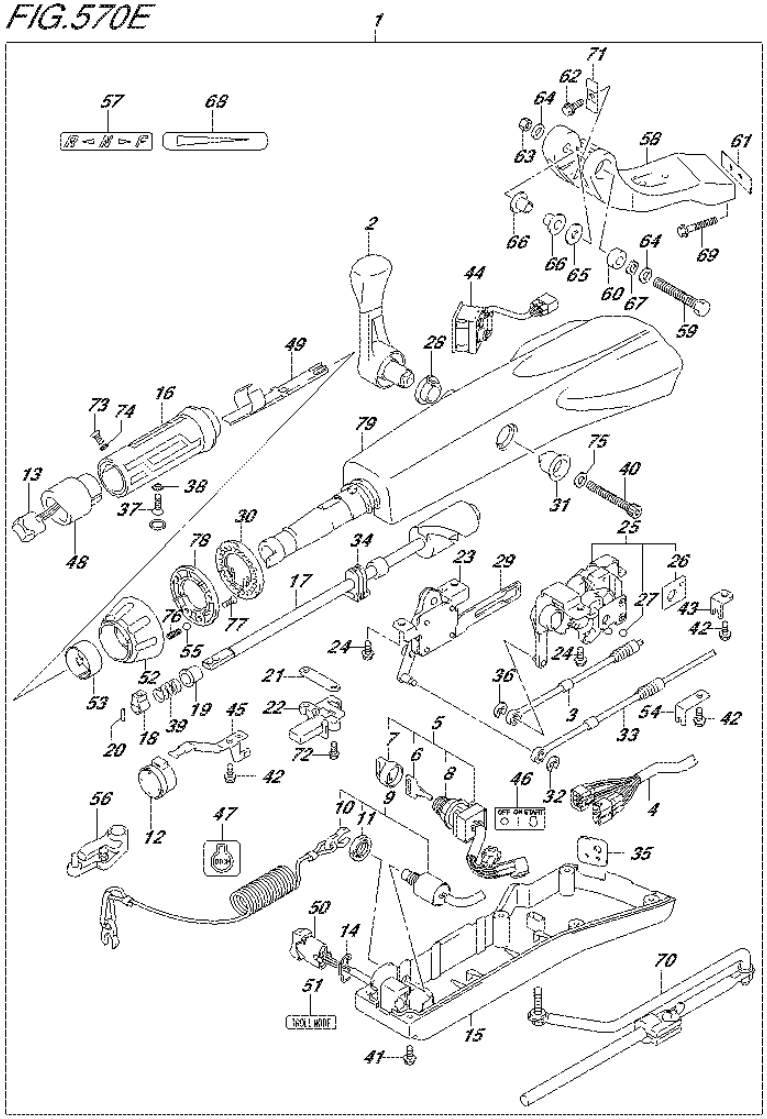

FIG.570E (3-F-4) OPT:TILLER HANDLE (DF90A E01)

REF NO.	PART NO.	DESCRIPTION	Q'TY	REMARKS
24	63251-87J00	.BOLT, SHIFT GEAR ASSY	4	
25	63260-88L00	.GEAR ASSY, SHIFT	1	
26	63272-87J00	..PLATE, BALL GUIDE	1	
27	63273-87J00	..BALL	1	
28	63262-87J00	.BUSH, SHIFT LEVER	1	
29	63271-87J00	.PLATE, LOCK	1	
30	63248-99J00	.PLATE, THROTTLE ADJ NOTCH	1	
31	63261-87J00	.BUSH, SHIFT GEAR	1	
32	63274-87J00	.E RING	1	
33	63610-87J00	.CABLE, THROTTLE	1	
34	37853-88L90	.GROMMET, PTT SWITCH LEAD	1	
35	63626-88L00	.GROMMET, WIRE HARNESS	1	
36	67292-87J00	.E RING	2	
37	09126-06015	.SCREW (6X23)	1	
38	09163-06001	.LOCK WASHER	1	
39	09440-12027	.SPRING	1	
40	21112-88L00	.BOLT SHIFT LEVER	1	
41	09125-05047	.SCREW (5X14)	6	
42	63611-88L00	.BOLT CLAMP BRACKET	3	
43	63612-87J00	.BRACKET, CLAMP	1	
44	34200-87L00	.TACHOMETER ASSY, WITH MONITOR	1	
45	36617-88L90	.CLAMP PLATE, MAIN HARNESS	1	
46	37112-88L90	.LABEL, IGNITION SWITCH	1	
47	37835-95D00	.LABEL, STOP	1	
48	37851-88L90	.BASE, PTT SWITCH	1	
49	37852-88L90	.HARNESS, GUIDE	1	
50	37861-87L10	.SWITCH, TROLLING CONTROL	1	
51	37864-88L90	.LABEL, TROLL MODE	1	
52	63244-99J00	.KNOB, THROTTLE ADJ	1	
53	63245-99J00	.BUSH, THROTTLE ADJ	1	
54	63612-88L10	.BRACKET, CLAMP SHIFT	1	
55	09260-10006	.BALL	1	
56	19120-87L10	.LEVER, THROTTLE	1	
57	21131-88L00	.MARK, CLUTCH SHIFT	1	

FIG.570E

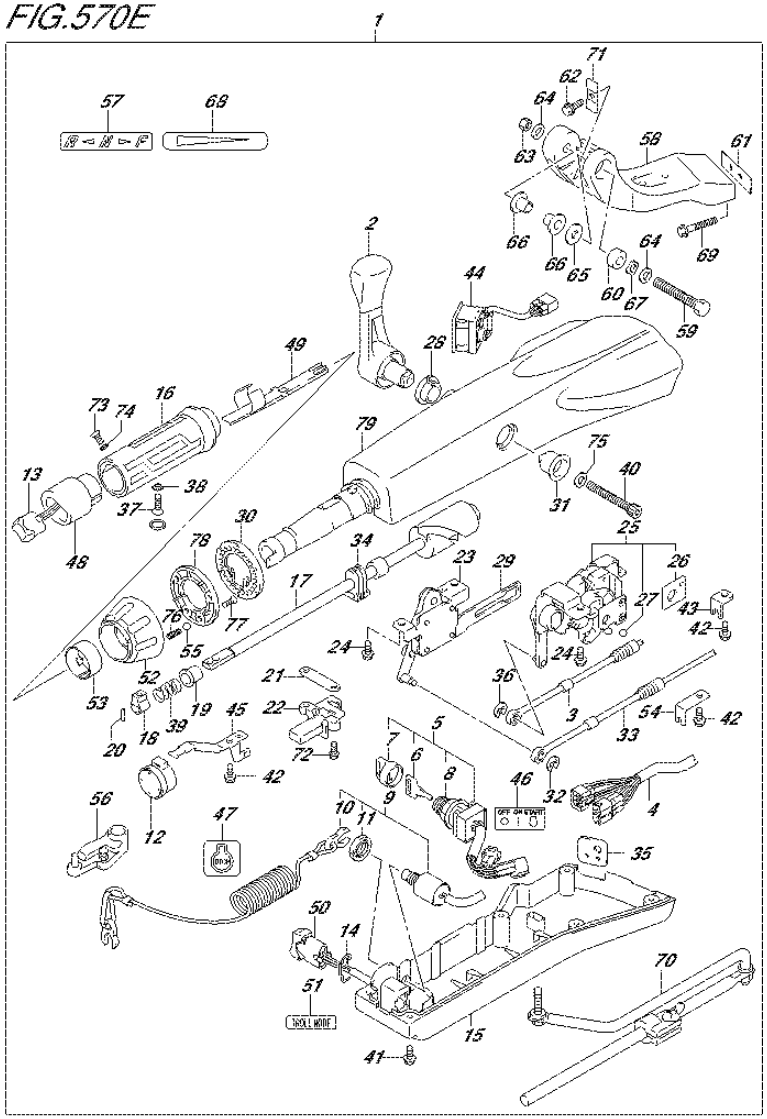

FIG.570E (3-F-5) OPT:TILLER HANDLE (DF90A E01)

REF NO.	PART NO.	DESCRIPTION	Q'TY	REMARKS
58	43761-88L01-0EP	.BRACKET, TILLER HANDLE (BLACK)	1	
59	43762-88L00	.BOLT TILLER HANDLE PIVOT	1	
60	43768-88L00	.SPACER, TILLER HANDLE	1	
61	43776-87L00	.SPACER, STRG BRKT	1	
62	09116-08137	.BOLT (8X22)	1	
63	09159-12014	.NUT	1	
64	09160-12066	.WASHER (12.5X22X2.5)	2	
65	09160-12124	.WASHER (12.5X32X1.5)	1	
66	63115-88L00	.BUSH, TILLER HANDLE	2	
67	09164-13010	.WASHER	1	
68	63215-93110	.MARK, HANDLE GRIP	1	
69	09116-10150	.BOLT (10X55)	2	
70	43770-99E03	.ADJUSTER ASSY, STEERING	1	
71	63132-88L00	.STOPPER, TILLER HANDLE	1	
72	63251-88L90	.BOLT	2	
73	37855-88L90	.SCREW,THROTTLE GRIP	1	
74	37854-88L90	.WASHER,THROTTLE GRIP	1	
75	63258-88L00	.WASHER	1	
76	09440-06037	.SPRING	1	
77	03522-05169	.SCREW	3	
78	63247-99J00	.PLATE,THROTTLE ADJ KNOB	1	
79	63111-88L00-0EP	.HOUSING, TILLER HANDLE	1	

FIG.570F

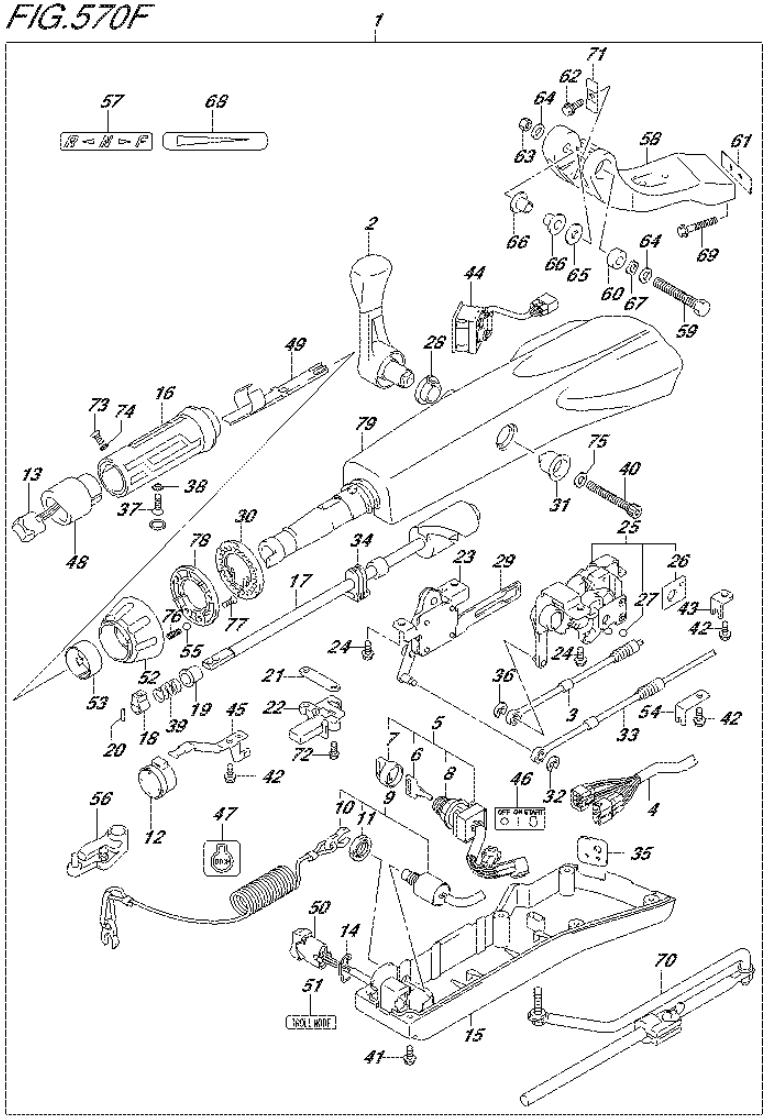

FIG.570F (3-F-6) OPT:TILLER HANDLE (DF90A E40)

REF NO.	PART NO.	DESCRIPTION	Q'TY	REMARKS
1	63002-87L12-0EP	KIT TILLER HANDLE (BLACK)	1	
2	21110-88L00	.LEVER, SHIFT	1	
3	23230-90J10	.CABLE, SHIFT	1	
4	36620-87L00	.WIRE ASSY, HARNESS	1	
5	37110-87L01	.SWITCH ASSY, IGNITION	1	
6-1	37141-99E00	..KEY (931)	1	
6-2	37141-99E10	..KEY (932)	1	
6-3	37141-99E20	..KEY (933)	1	
6-4	37141-99E30	..KEY (934)	1	
6-5	37141-99E40	..KEY (935)	1	
6-6	37141-99E50	..KEY (936)	1	
6-7	37141-99E60	..KEY (937)	1	
6-8	37141-99E70	..KEY (938)	1	
6-9	37141-99E80	..KEY (939)	1	
6-10	37141-99E90	..KEY (940)	1	
6-11	37141-99EA0	..KEY (941)	1	
6-12	37141-99EB0	..KEY (942)	1	
7	37143-99E00	..CAP, KEY	1	
8	37149-93J00	..CAP, CYLINDER BODY	1	
9	37820-87L01	.SWITCH ASSY, EMERGENCY	1	
10	37823-92E01	..PLATE, LOCK	1	
11	37826-92J00	..NUT	1	
12	38500-93J90	.BUZZER	1	
13	37850-87L00	.SWITCH ASSY, PTT	1	
14	37852-87J00	.PLATE, TRIM SWITCH	1	
15	63121-88L00	.COVER, UNDER	1	
16	63210-88L00	.GRIP, HANDLE	1	
17	63221-88L00	.SHAFT, THROTTLE	1	
18	63223-92D00	.STOPPER, HANDLE ROD	1	
19	63225-88L00	.BUSH, HANDLE ROD	1	
20	63227-93200	.PIN, HANDLE ROD	1	
21	63235-88L00	.PLATE, THROTTLE SHAFT	1	
22	63246-88L00	.STOPPER THROTTLE ADJ	1	
23	63250-88L00	.ARM ASSY, THROTTLE	1	

FIG.570F

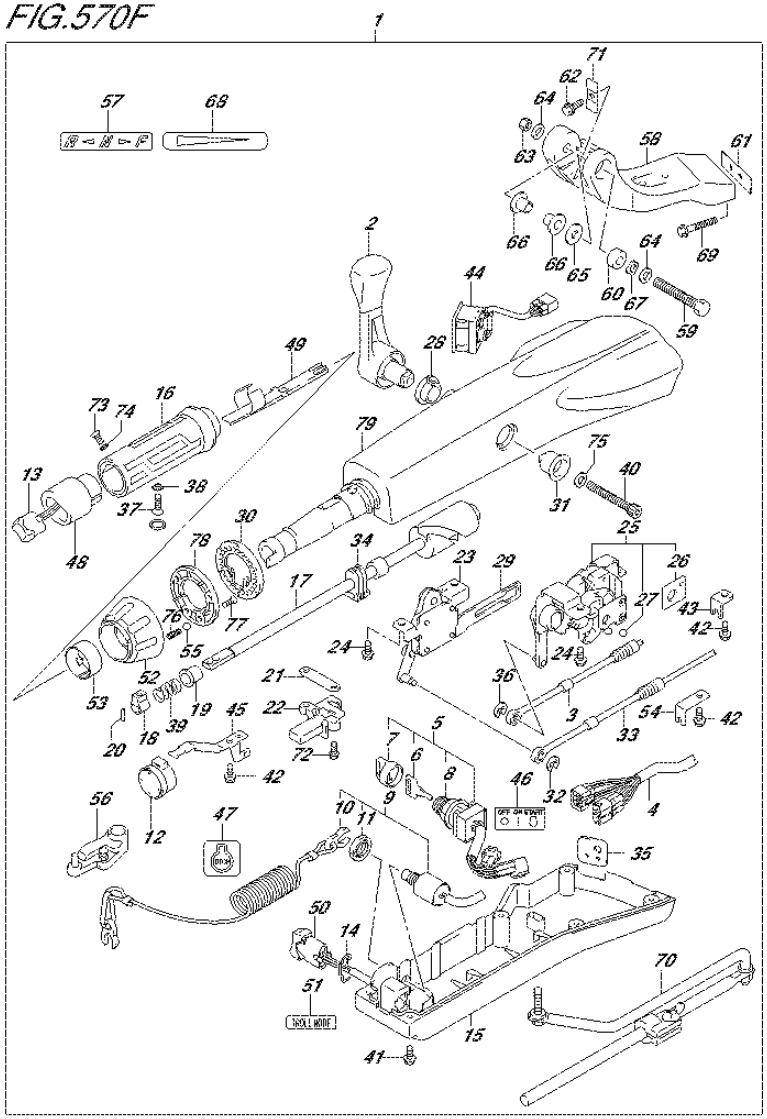

FIG.570F (3-F-7) OPT:TILLER HANDLE (DF90A E40)

REF NO.	PART NO.	DESCRIPTION	Q'TY	REMARKS
24	63251-87J00	.BOLT, SHIFT GEAR ASSY	4	
25	63260-88L00	.GEAR ASSY, SHIFT	1	
26	63272-87J00	..PLATE, BALL GUIDE	1	
27	63273-87J00	..BALL	1	
28	63262-87J00	.BUSH, SHIFT LEVER	1	
29	63271-87J00	.PLATE, LOCK	1	
30	63248-99J00	.PLATE, THROTTLE ADJ NOTCH	1	
31	63261-87J00	.BUSH, SHIFT GEAR	1	
32	63274-87J00	.E RING	1	
33	63610-87J00	.CABLE, THROTTLE	1	
34	37853-88L90	.GROMMET, PTT SWITCH LEAD	1	
35	63626-88L00	.GROMMET, WIRE HARNESS	1	
36	67292-87J00	.E RING	2	
37	09126-06015	.SCREW (6X23)	1	
38	09163-06001	.LOCK WASHER	1	
39	09440-12027	.SPRING	1	
40	21112-88L00	.BOLT SHIFT LEVER	1	
41	09125-05047	.SCREW (5X14)	6	
42	63611-88L00	.BOLT CLAMP BRACKET	3	
43	63612-87J00	.BRACKET, CLAMP	1	
44	34200-87L00	.TACHOMETER ASSY, WITH MONITOR	1	
45	36617-88L90	.CLAMP PLATE, MAIN HARNESS	1	
46	37112-88L90	.LABEL, IGNITION SWITCH	1	
47	37835-95D00	.LABEL, STOP	1	
48	37851-88L90	.BASE, PTT SWITCH	1	
49	37852-88L90	.HARNESS, GUIDE	1	
50	37861-87L10	.SWITCH, TROLLING CONTROL	1	
51	37864-88L90	.LABEL, TROLL MODE	1	
52	63244-99J00	.KNOB, THROTTLE ADJ	1	
53	63245-99J00	.BUSH, THROTTLE ADJ	1	
54	63612-88L10	.BRACKET, CLAMP SHIFT	1	
55	09260-10006	.BALL	1	
56	19120-87L10	.LEVER, THROTTLE	1	
57	21131-88L00	.MARK, CLUTCH SHIFT	1	

FIG.570F

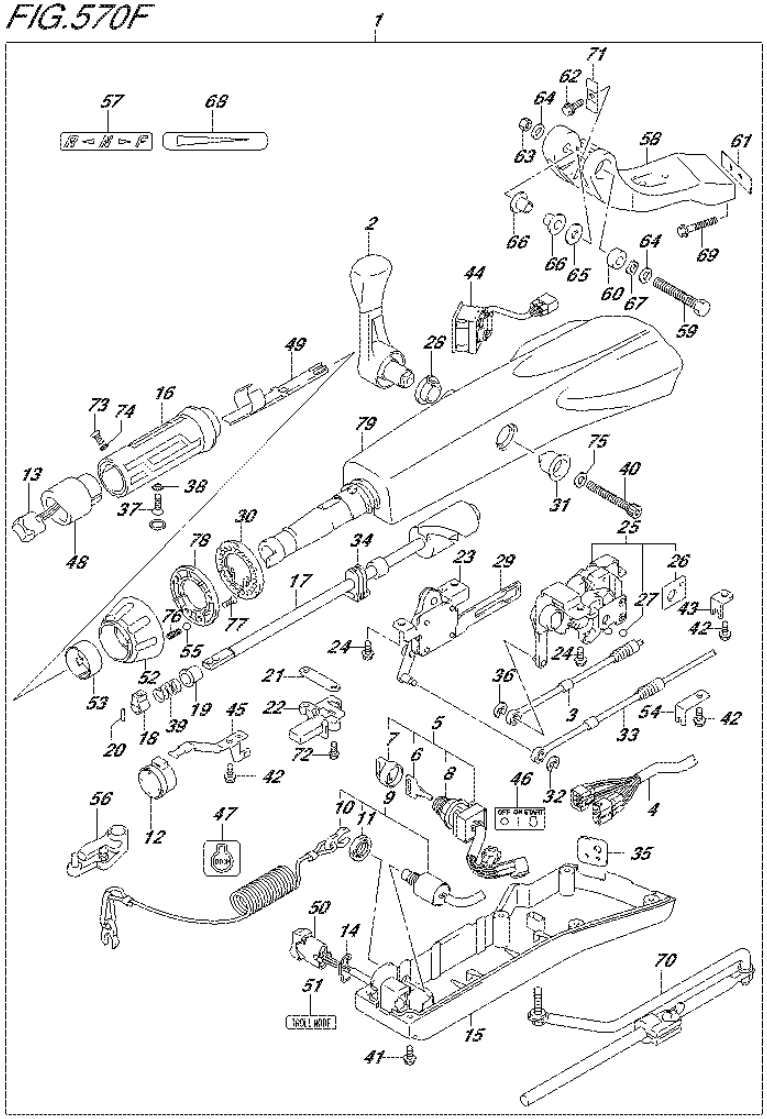

FIG.570F (3-F-8) OPT:TILLER HANDLE (DF90A E40)

REF NO.	PART NO.	DESCRIPTION	Q'TY	REMARKS
58	43761-88L01-0EP	.BRACKET, TILLER HANDLE (BLACK)	1	
59	43762-88L00	.BOLT TILLER HANDLE PIVOT	1	
60	43768-88L00	.SPACER, TILLER HANDLE	1	
61	43776-87L00	.SPACER, STRG BRKT	1	
62	09116-08137	.BOLT (8X22)	1	
63	09159-12014	.NUT	1	
64	09160-12066	.WASHER (12.5X22X2.5)	2	
65	09160-12124	.WASHER (12.5X32X1.5)	1	
66	63115-88L00	.BUSH, TILLER HANDLE	2	
67	09164-13010	.WASHER	1	
68	63215-93110	.MARK, HANDLE GRIP	1	
69	09116-10150	.BOLT (10X55)	2	
70	43770-99E03	.ADJUSTER ASSY, STEERING	1	
71	63132-88L00	.STOPPER, TILLER HANDLE	1	
72	63251-88L90	.BOLT	2	
73	37855-88L90	.SCREW,THROTTLE GRIP	1	
74	37854-88L90	.WASHER,THROTTLE GRIP	1	
75	63258-88L00	.WASHER	1	
76	09440-06037	.SPRING	1	
77	03522-05169	.SCREW	3	
78	63247-99J00	.PLATE,THROTTLE ADJ KNOB	1	
79	63111-88L00-0EP	.HOUSING, TILLER HANDLE	1	

FIG.585A

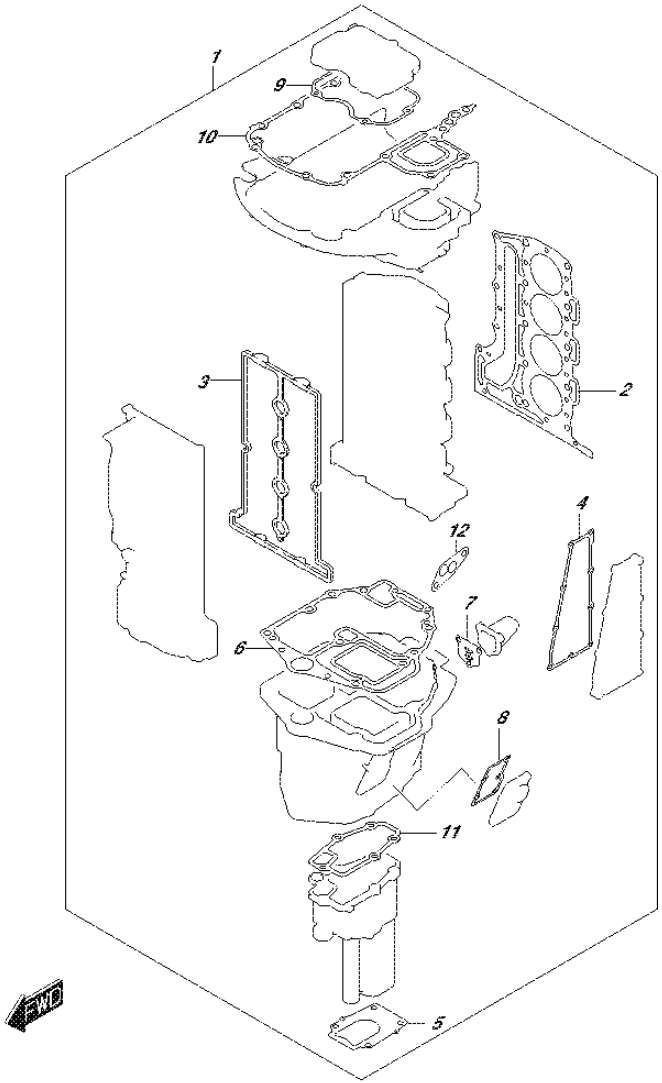

DF90A_E01_015_585A
OPT:GASKET SET

FIG.585A (3-F-9) OPT:GASKET SET

REF NO.	PART NO.	DESCRIPTION	Q'TY	REMARKS
1	11410-87851	GASKET SET	1	
2	11141-87L00	.GASKET, CYLINDER HEAD	1	
3	11189-87L00	.GASKET, CYLINDER HEAD COVER	1	
4	14151-87L00	.GASKET, EXH COVER	1	
5	17472-87L00	.GASKET, PUMP CASE PANEL	1	
6	11489-87L00	.GASKET, OIL PAN	1	
7	11542-87L00	.GASKET, EXH TUBE	1	
8	11552-87L00	.GASKET, OIL PAN WTR JKT COV	1	
9	51123-87L00	.GASKET, MOUNT CASE COVER	1	
10	51211-87L10	.GASKET, ENGINE HOLDER	1	
11	52331-87L00	.GASKET, EXH TUBE HOUSING	1	
12	16539-87L00	.GASKET, OIL FILTER ADAPTER CASE	1	

FIG.588A

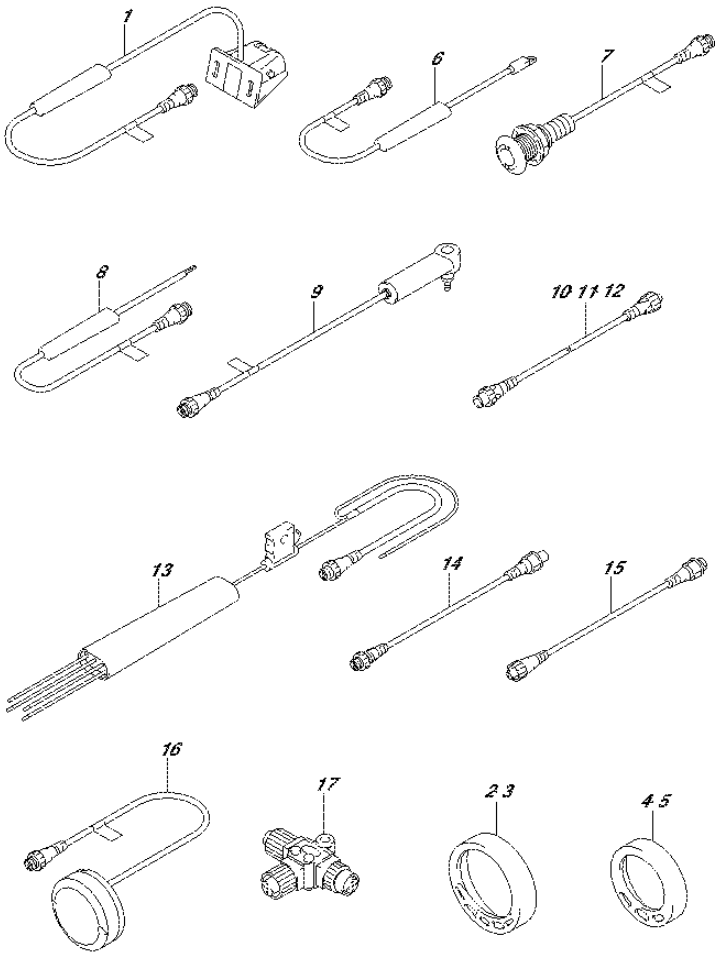

FIG.588A (3-F-10) OPT:LOWRANCE GAUGE

REF NO.	PART NO.	DESCRIPTION	Q'TY	REMARKS
1	34190-88L00	SENSOR ASSY, PAD WHEEL	1	
2	34193-88L00	BEZEL, 4 IN CHR	1	
3	34193-88L20	BEZEL, 4 IN WHITE	1	
4	34193-88L40	BEZEL, 2 IN CHR	1	
5	34193-88L60	BEZEL, 2 IN WHITE	1	
6	34455-88L00	SENSOR ASSY, WATER TEMP	1	
7	34455-88L10	SENSOR ASSY, WATER TEMP	1	
8	34810-88L00	SENSOR ASSY, FLUID LEVEL	1	
9	34960-88L00	SENSOR ASSY, WATER PRESSURE	1	
10	36662-88L10	WIRE, 2 EXTENSION	1	
11	36662-88L20	WIRE, 6 EXTENSION	1	
12	36662-88L30	WIRE, 15 EXTENSION	1	
13	36663-88L10	HARNESS ASSY, NETWORK POWER	1	
14	36666-88L00	WIRE, ADAPTER TO N NETWORK	1	
15	36666-88L10	WIRE, ADAPTER TO L NETWORK	1	
16	39950-88L00	MODULE ASSY, GPS RECEIVER	1	
17	36664-88L00	CONNECTOR, BRANCH	1	

10000

PART NO.	FIG.NO.-REF.NO.
11100-87L01	111A-1
11112-84400	111A-14
11115-73G01-001	111A-4
11117-89J00	111A-10
11117-90J10	113A-4
11118-95J00	204A-18
11118-98J01	113A-7
11141-87L00	111A-11
	585A-2
11170-87L11	111A-17
11173-87L00	111A-21
11189-87L00	111A-18
	585A-3
11194-87L10	111A-27
11196-87L00	162A-1
	162B-1
	162C-1
	162D-1
	162E-1
	162F-1
	162G-1
	162H-1
	162J-1
	162K-1
11216-77E00	113A-5
11223-87L00	113A-11
11224-87L00	113A-13
11241-73003	175A-9
11261-93J00	111A-5
	140A-4
11291-87L00	113A-1
11300-87L10	113A-3
11382-99E00	111A-15
11410-87851	585A-1
11489-87L00	180A-1
	180B-1
	180C-1
	180D-1
	180E-1
	180F-1
	180G-1
	180H-1
	180J-1
	180K-1
	585A-6

PART NO.	FIG.NO.-REF.NO.
11501-87L10-0EP	180A-2-1
	180B-2-1
	180C-2
	180D-2
	180E-2
	180F-2
	180G-2-1
	180H-2-1
	180J-2
	180K-2
11501-87L10-Y5S	180A-2-2
	180B-2-2
	180G-2-2
	180H-2-2
11510-87L02	136A-1
	136B-1
	136C-1
	136D-1
	136E-1
	136F-1
	136G-1
	136H-1
	136J-1
	136K-1
11514-87L00	136A-5
	136B-5
	136C-5
	136D-5
	136E-5
	136F-5
	136G-5
	136H-5
	136J-5
	136K-5
11541-87L00-0EP	180A-3-1
	180B-3-1
	180C-3
	180D-3
	180E-3
	180F-3
	180G-3-1
	180H-3-1
	180J-3
	180K-3
11541-87L00-Y5S	180A-3-2
	180B-3-2
	180G-3-2
	180H-3-2
11542-87L00	180A-4
	180B-4

PART NO.	FIG.NO.-REF.NO.
	180C-4
	180D-4
	180E-4
	180F-4
	180G-4
	180H-4
	180J-4
	180K-4
	585A-7
11551-87L00-0EP	180A-5-1
	180B-5-1
	180C-5
	180D-5
	180E-5
	180F-5
	180G-5-1
	180H-5-1
	180J-5
	180K-5
11551-87L00-Y5S	180A-5-2
	180B-5-2
	180G-5-2
	180H-5-2
11552-87L00	180A-6
	180B-6
	180C-6
	180D-6
	180E-6
	180F-6
	180G-6
	180H-6
	180J-6
	180K-6
	585A-8
12100-69830-025	116A-7-6
12100-69830-0A0	116A-7-1
12100-69830-0B0	116A-7-2
12100-69830-0C0	116A-7-3
12100-69830-0D0	116A-7-4
12100-69830-0E0	116A-7-5
12100-87L01-050	116A-13
12111-87L00	116A-1
12140-87L01	116A-2
12140-87L01-050	116A-14
12151-54A50	116A-3
12160-87L10	116A-5
12220-87L00	116A-8
12281-87J00	401A-19
	401B-19
	401C-19

PART NO.	FIG.NO.-REF.NO.
	401D-19
	401E-19
	401F-19
	401G-19
	401H-19
	401J-19
	401K-19
12300-57820-0AA	116A-9-6
12300-57820-0BA	116A-9-7
12300-57820-0CA	116A-9-8
12300-57820-0DA	116A-9-9
12300-57820-0EA	116A-9-10
12300-78890	116A-10
12300-78890-012	116A-11
12340-57K02-0A0	116A-9-4
12340-57K02-0B0	116A-9-5
12340-57K02-0C0	116A-9-1
12340-57K02-0D0	116A-9-2
12340-57K02-0E0	116A-9-3
12701-87L00	121E-1
	121F-1
12701-87L10	121G-1
	121H-1
	121J-1
	121K-1
12701-87L20	121A-1
	121B-1
	121C-1
	121D-1
12705-87L00	121A-2
	121B-2
	121C-2
	121D-2
	121E-2
	121F-2
12705-87L10	121G-2
	121H-2
	121J-2
	121K-2
12730-87L00	119A-1
12741-90J01	121A-3
	121B-3
	121C-3
	121D-3
	121E-3
	121F-3
	121G-3
	121H-3
	121J-3
	121K-3

PART NO.	FIG.NO.-REF.NO.
12748-87L00	121A-4
	121B-4
	121C-4
	121D-4
	121E-4
	121F-4
	121G-4
	121H-4
	121J-4
	121K-4
12749-93J00	121A-5
	121B-5
	121C-5
	121D-5
	121E-5
	121F-5
	121G-5
	121H-5
	121J-5
	121K-5
12761-87L00	119A-4
12771-87L00	119A-5
12810-87L00	119A-7
12812-90J00	119A-10
12813-73G00	119A-8
12831-93J01	119A-11
12891-69J00	121A-8
	121B-8
	121C-8
	121D-8
	121E-8
	121F-8
	121G-8
	121H-8
	121J-8
	121K-8
12892-69J00-228	121A-9-1
	121B-9-1
	121C-9-1
	121D-9-1
	121E-9-1
	121F-9-1
	121G-9-1
	121H-9-1
	121J-9-1
	121K-9-1
12892-69J00-230	121A-9-2
	121B-9-2
	121C-9-2
	121D-9-2

PART NO.	FIG.NO.-REF.NO.
	121E-9-2
	121F-9-2
	121G-9-2
	121H-9-2
	121J-9-2
	121K-9-2
12892-69J00-232	121A-9-3
	121B-9-3
	121C-9-3
	121D-9-3
	121E-9-3
	121F-9-3
	121G-9-3
	121H-9-3
	121J-9-3
	121K-9-3
12892-69J00-234	121A-9-4
	121B-9-4
	121C-9-4
	121D-9-4
	121E-9-4
	121F-9-4
	121G-9-4
	121H-9-4
	121J-9-4
	121K-9-4
12892-69J00-236	121A-9-5
	121B-9-5
	121C-9-5
	121D-9-5
	121E-9-5
	121F-9-5
	121G-9-5
	121H-9-5
	121J-9-5
	121K-9-5
12892-69J00-238	121A-9-6
	121B-9-6
	121C-9-6
	121D-9-6
	121E-9-6
	121F-9-6
	121G-9-6
	121H-9-6
	121J-9-6
	121K-9-6
12892-69J00-240	121A-9-7
	121B-9-7
	121C-9-7
	121D-9-7

PART NO.	FIG.NO.-REF.NO.	PART NO.	FIG.NO.-REF.NO.	PART NO.	FIG.NO.-REF.NO.
	121E-9-7		121E-9-12		121E-9-17
	121F-9-7		121F-9-12		121F-9-17
	121G-9-7		121G-9-12		121G-9-17
	121H-9-7		121H-9-12		121H-9-17
	121J-9-7		121J-9-12		121J-9-17
	121K-9-7		121K-9-12		121K-9-17
12892-69J00-242	121A-9-8	12892-69J00-252	121A-9-13	12892-69J00-262	121A-9-18
	121B-9-8		121B-9-13		121B-9-18
	121C-9-8		121C-9-13		121C-9-18
	121D-9-8		121D-9-13		121D-9-18
	121E-9-8		121E-9-13		121E-9-18
	121F-9-8		121F-9-13		121F-9-18
	121G-9-8		121G-9-13		121G-9-18
	121H-9-8		121H-9-13		121H-9-18
	121J-9-8		121J-9-13		121J-9-18
	121K-9-8		121K-9-13		121K-9-18
12892-69J00-244	121A-9-9	12892-69J00-254	121A-9-14	12892-69J00-264	121A-9-19
	121B-9-9		121B-9-14		121B-9-19
	121C-9-9		121C-9-14		121C-9-19
	121D-9-9		121D-9-14		121D-9-19
	121E-9-9		121E-9-14		121E-9-19
	121F-9-9		121F-9-14		121F-9-19
	121G-9-9		121G-9-14		121G-9-19
	121H-9-9		121H-9-14		121H-9-19
	121J-9-9		121J-9-14		121J-9-19
	121K-9-9		121K-9-14		121K-9-19
12892-69J00-246	121A-9-10	12892-69J00-256	121A-9-15	12892-69J00-266	121A-9-20
	121B-9-10		121B-9-15		121B-9-20
	121C-9-10		121C-9-15		121C-9-20
	121D-9-10		121D-9-15		121D-9-20
	121E-9-10		121E-9-15		121E-9-20
	121F-9-10		121F-9-15		121F-9-20
	121G-9-10		121G-9-15		121G-9-20
	121H-9-10		121H-9-15		121H-9-20
	121J-9-10		121J-9-15		121J-9-20
	121K-9-10		121K-9-15		121K-9-20
12892-69J00-248	121A-9-11	12892-69J00-258	121A-9-16	12892-69J00-268	121A-9-21
	121B-9-11		121B-9-16		121B-9-21
	121C-9-11		121C-9-16		121C-9-21
	121D-9-11		121D-9-16		121D-9-21
	121E-9-11		121E-9-16		121E-9-21
	121F-9-11		121F-9-16		121F-9-21
	121G-9-11		121G-9-16		121G-9-21
	121H-9-11		121H-9-16		121H-9-21
	121J-9-11		121J-9-16		121J-9-21
	121K-9-11		121K-9-16		121K-9-21
12892-69J00-250	121A-9-12	12892-69J00-260	121A-9-17	12892-69J00-270	121A-9-22
	121B-9-12		121B-9-17		121B-9-22
	121C-9-12		121C-9-17		121C-9-22
	121D-9-12		121D-9-17		121D-9-22

PART NO.	FIG.NO.-REF.NO.	PART NO.	FIG.NO.-REF.NO.	PART NO.	FIG.NO.-REF.NO.
	121E-9-22		121E-13		143C-2
	121F-9-22		121F-13		143E-2
	121G-9-22		121G-13		143G-2
	121H-9-22		121H-13		143J-2
	121J-9-22		121J-13	13370-88L10	143B-2
	121K-9-22		121K-13		143D-2
12892-69J00-272	121A-9-23	12932-24400	121A-14		143F-2
	121B-9-23		121B-14		143H-2
	121C-9-23		121C-14		143K-2
	121D-9-23		121D-14	13510-87L00	163A-7
	121E-9-23		121E-14		163B-7
	121F-9-23		121F-14		163C-7
	121G-9-23		121G-14		163D-7
	121H-9-23		121H-14		163E-7
	121J-9-23		121J-14		163F-7
	121K-9-23		121K-14		163G-7
12911-87L00	121A-10	12933-51E00	121A-15		163H-7
	121B-10		121B-15		163J-7
	121C-10		121C-15		163K-7
	121D-10		121D-15	13614-89J00	143B-15
	121E-10		121E-15		143D-15
	121F-10		121F-15		143F-15
	121G-10		121G-15		143H-15
	121H-10		121H-15		143K-15
	121J-10		121J-15	13614-93J00	143B-16
	121K-10		121K-15		143D-16
12915-87L50	121A-11	13110-87L00	122A-1		143F-16
	121B-11	13119-87L00	122A-2		143H-16
	121C-11	13125-87L00	122A-3		143K-16
	121D-11	13300-87L00	163A-1	13650-52G00	315A-1
	121E-11		163B-1	13655-87J00	315A-2
	121F-11		163C-1	13710-99E00	134A-1
	121G-11		163D-1	13810-87L00	134A-2
	121H-11		163E-1	13813-87L00	134A-3
	121J-11		163F-1	14141-87L00	140A-1
	121K-11		163G-1	14151-87L00	140A-2
12921-87J10	121A-12		163H-1		585A-4
	121B-12		163J-1	15100-90J11	146A-1
	121C-12		163K-1	15190-90J30	146A-10
	121D-12	13315-87L00	163A-2	15192-87L11	146A-11
	121E-12		163B-2	15198-87L00	146A-16
	121F-12		163C-2	15200-92J00	143A-3
	121G-12		163D-2		143C-3
	121H-12		163E-2		143E-3
	121J-12		163F-2		143G-3
	121K-12		163G-2		143J-3
12931-78G00	121A-13		163H-2	15200-92J10	143B-3
	121B-13		163J-2		143D-3
	121C-13		163K-2		143F-3
	121D-13	13370-88L00	143A-2		143H-3

PART NO.	FIG.NO.-REF.NO.	PART NO.	FIG.NO.-REF.NO.	PART NO.	FIG.NO.-REF.NO.
	143K-3		143F-23	15641-88L31	143B-18
15410-87L00	146A-4		143G-23		143D-18
15419-87J00	146A-5		143H-23		143F-18
15421-87L00	146A-8		143J-23		143H-18
15422-96J00	146A-7		143K-23		143K-18
15600-92J01	143A-1	15626-92J00	143A-4	15641-88L40	143A-19
	143C-1		143C-4		143C-19
	143E-1		143E-4		143E-19
	143G-1		143G-4		143G-19
	143J-1		143J-4		143J-19
15600-92J12	143B-1	15626-92J10	143B-4	15641-88L51	143B-19
	143D-1		143D-4		143D-19
	143F-1		143F-4		143F-19
	143H-1		143H-4		143H-19
	143K-1		143K-4		143K-19
15612-88L00	143A-21	15628-99E00	143A-5	15642-88L00	143A-8
	143B-21		143B-5		143B-8
	143C-21		143C-5		143C-8
	143D-21		143D-5		143D-8
	143E-21		143E-5		143E-8
	143F-21		143F-5		143F-8
	143G-21		143G-5		143G-8
	143H-21		143H-5		143H-8
	143J-21		143J-5		143J-8
	143K-21		143K-5		143K-8
15613-88L00	143A-22	15629-99E10	143A-6	15642-88L10	143A-20
	143B-22		143B-6		143B-20
	143C-22		143C-6		143C-20
	143D-22		143D-6		143D-20
	143E-22		143E-6		143E-20
	143F-22		143F-6		143F-20
	143G-22		143G-6		143G-20
	143H-22		143H-6		143H-20
	143J-22		143J-6		143J-20
	143K-22		143K-6		143K-20
15613-92J00	143A-25	15641-88L00	143A-7	15643-88L00	143A-17
	143B-25		143C-7		143B-17
	143C-25		143E-7		143C-17
	143D-25		143G-7		143D-17
	143E-25		143J-7		143E-17
	143F-25	15641-88L10	143B-7		143F-17
	143G-25		143D-7		143G-17
	143H-25		143F-7		143H-17
	143J-25		143H-7		143J-17
	143K-25		143K-7		143K-17
15614-88L00	143A-23	15641-88L20	143A-18	15644-88L00	143A-13
	143B-23		143C-18		143C-13
	143C-23		143E-18		143E-13
	143D-23		143G-18		143G-13
	143E-23		143J-18		143J-13

PART NO.	FIG.NO.-REF.NO.	PART NO.	FIG.NO.-REF.NO.	PART NO.	FIG.NO.-REF.NO.
15644-88L10	143B-13		144F-1		143F-12
	143D-13		144G-1		143G-12
	143F-13		144H-1		143H-12
	143H-13		144J-1		143J-12
	143K-13		144K-1		143K-12
15645-88L00	143A-14	15683-87J00	143A-11	15830-87L30	144A-5
	143B-14		143B-11		144C-5
	143C-14		143C-11		144E-5
	143D-14		143D-11		144G-5
	143E-14		143E-11		144J-5
	143F-14		143F-11	15830-87L40	144B-5
	143G-14		143G-11		144D-5
	143H-14		143H-11		144F-5
	143J-14		143J-11		144H-5
	143K-14		143K-11		144K-5
15648-92J00	143A-16	15710-82K50	144A-2	16400-87L00	175A-1
	143B-24		144B-2	16440-99E00	175A-3
	143C-16		144C-2	16510-61A31	175A-10
	143D-24		144D-2	16519-87L00	175A-8
	143E-16		144E-2	16520-87L00	175A-5
	143F-24		144F-2	16531-87L00	175A-11
	143G-16		144G-2	16539-87L00	175A-12
	143H-24		144H-2		585A-12
	143J-16		144J-2	16910-87L00	180A-17
	143K-24		144K-2		180B-17
15650-99E00	143A-9	15716-65DT0	144A-3		180C-17
	143B-9		144B-3		180D-17
	143C-9		144C-3		180E-17
	143D-9		144D-3		180F-17
	143E-9		144E-3		180G-17
	143F-9		144F-3		180H-17
	143G-9		144G-3		180J-17
	143H-9		144H-3		180K-17
	143J-9		144J-3	16930-87L00	180A-18
	143K-9		144K-3		180B-18
15654-88L00	143A-10	15750-87L30	144A-4		180C-18
	143B-10		144C-4		180D-18
	143C-10		144E-4		180E-18
	143D-10		144G-4		180F-18
	143E-10		144J-4		180G-18
	143F-10	15750-87L40	144B-4		180H-18
	143G-10		144D-4		180J-18
	143H-10		144F-4		180K-18
	143J-10		144H-4	17400-87L01	160A-18
	143K-10		144K-4		160B-18
15681-92J00	144A-1	15760-88L00	143A-12		160C-18
	144B-1		143B-12		160D-18
	144C-1		143C-12		160E-18
	144D-1		143D-12		160F-18
	144E-1		143E-12		160G-18

PART NO.	FIG.NO.-REF.NO.	PART NO.	FIG.NO.-REF.NO.	PART NO.	FIG.NO.-REF.NO.
	160H-18		160F-3		160G-7
	160J-18		160H-3		160H-7
	160K-18		160K-3		160J-7
17410-99E10	160A-1	17472-87L00	160A-4		160K-7
	160B-1		160B-4	17564-87D00	160A-8
	160C-1		160C-4		160B-8
	160D-1		160D-4		160C-8
	160E-1		160E-4		160D-8
	160F-1		160F-4		160E-8
	160G-1		160G-4		160F-8
	160H-1		160H-4		160G-8
	160J-1		160J-4		160H-8
	160K-1		160K-4		160J-8
17413-99E11	160A-16		585A-5		160K-8
	160C-16	17561-87L20	160A-5-1	17611-90J00-0EP	162A-2-1
	160E-16		160B-5-1		162B-2-1
	160G-16		160C-5-1		162C-2
	160J-16		160D-5-1		162D-2
17413-99E21	160B-16		160E-5-1		162E-2
	160D-16		160F-5-1		162F-2
	160F-16		160G-5-1		162G-2-1
	160H-16		160H-5-1		162H-2-1
	160K-16		160J-5-1		162J-2
17416-99E10	160A-17		160K-5-1		162K-2
	160B-17	17561-87L30	160A-5-2	17611-90J00-Y5S	162A-2-2
	160C-17		160B-5-2		162B-2-2
	160D-17		160C-5-2		162G-2-2
	160E-17		160D-5-2		162H-2-2
	160F-17		160E-5-2	17631-87L00	160A-9
	160G-17		160F-5-2		160B-9
	160H-17		160G-5-2		160C-9
	160J-17		160H-5-2		160D-9
	160K-17		160J-5-2		160E-9
17461-87E12	160A-2		160K-5-2		160F-9
	160B-2	17562-87L00	160A-6		160G-9
	160C-2		160B-6		160H-9
	160D-2		160C-6		160J-9
	160E-2		160D-6		160K-9
	160F-2		160E-6	17632-87L00	160A-10
	160G-2		160F-6		160B-10
	160H-2		160G-6		160C-10
	160J-2		160H-6		160D-10
	160K-2		160J-6		160E-10
17471-87L00	160A-3		160K-6		160F-10
	160C-3	17563-87D00	160A-7		160G-10
	160E-3		160B-7		160H-10
	160G-3		160C-7		160J-10
	160J-3		160D-7		160K-10
17471-87L10	160B-3		160E-7	17660-99E01	162A-3
	160D-3		160F-7		162B-3

PART NO.	FIG.NO.-REF.NO.	PART NO.	FIG.NO.-REF.NO.	PART NO.	FIG.NO.-REF.NO.
	162C-3		180C-8		410C-40
	162D-3		180D-8		410D-40
	162E-3		180E-8		410E-40
	162F-3		180F-8		410F-40
	162G-3		180G-8		410G-40
	162H-3		180H-8		410H-40
	162J-3		180J-8		410J-40
	162K-3		180K-8		410K-40
17670-90J00	162A-4-1		410A-15	18137-87L01	122A-8
	162B-4-1		410B-15	18498-87JC0	143A-31
	162C-4-1		410C-15		143B-31
	162D-4-1		410D-15		143C-31
	162E-4-1		410E-15		143D-31
	162F-4-1		410F-15		143E-31
	162G-4-1		410G-15		143F-31
	162H-4-1		410H-15		143G-31
	162J-4-1		410J-15		143H-31
	162K-4-1		410K-15		143J-31
17670-90J10	162A-4-2	17914-93J00	180A-9		143K-31
	162B-4-2		180B-9	18498-95J00	111A-24
	162C-4-2		180C-9	18498-99E10	146A-13
	162D-4-2		180D-9		146A-14
	162E-4-2		180E-9	18498-99E20	144A-8
	162F-4-2		180F-9		144B-8
	162G-4-2		180G-9		144C-8
	162H-4-2		180H-9		144D-8
	162J-4-2		180J-9		144E-8
	162K-4-2		180K-9		144F-8
17681-87L00	162A-5		410A-16		144G-8
	162B-5		410B-16		144H-8
	162C-5		410C-16		144J-8
	162D-5		410D-16		144K-8
	162E-5		410E-16	18498-99EA0	507A-6
	162F-5		410F-16	18590-68H00	315A-3
	162G-5		410G-16	19115-87L00	163A-8
	162H-5		410H-16		163B-8
	162J-5		410J-16		163C-8
	162K-5		410K-16		163D-8
17685-87L00	162A-6	17915-87L00	162A-11		163E-8
	162B-6		162B-11		163F-8
	162C-6		162C-11		163G-8
	162D-6		162D-11		163H-8
	162E-6		162E-11		163J-8
	162F-6		162F-11		163K-8
	162G-6		162G-11	19120-87L00	163A-9
	162H-6		162H-11		163B-9
	162J-6		162J-11		163E-9
	162K-6		162K-11		163F-9
17913-93J00	180A-8	17917-87L00	410A-40		163G-9
	180B-8		410B-40		163H-9

PART NO.	FIG.NO.-REF.NO.
19120-87L10	163C-9
	163D-9
	163J-9
	163K-9
	570A-56
	570B-56
	570C-56
	570D-56
	570E-56
	570F-56
19131-95502	163A-10
	163B-10
	163C-10
	163D-10
	163E-10
	163F-10
	163G-10
	163H-10
	163J-10
	163K-10
20000	
21110-87L00	204A-1
21110-88L00	444A-3
	444B-3
	444C-3
	444D-3
	570A-2
	570B-2
	570C-2
	570D-2
	570E-2
	570F-2
21112-88L00	444A-41
	444B-41
	444C-41
	444D-41
	570A-40
	570B-40
	570C-40
	570D-40
	570E-40
	570F-40
21131-88L00	444A-71
	444B-71
	444C-71
	444D-71

PART NO.	FIG.NO.-REF.NO.
	570A-57
	570B-57
	570C-57
	570D-57
	570E-57
	570F-57
21131-93J00	204A-2
21151-87L00	204A-3
21152-87L00	204A-4
21153-87L00	204A-5
21157-87L00	204A-6
21210-87L00	204A-13
22511-99011	204A-22
	336A-1
	336B-1
	336C-1
	336D-1
	336E-1
	336F-1
	336G-1
	336H-1
	336J-1
	336K-1
23115-87L00	204A-7
23230-90J10	444A-4
	444B-4
	444C-4
	444D-4
	570A-3
	570B-3
	570C-3
	570D-3
	570E-3
	570F-3
25111-87L00	206A-1-1
25111-87L10	206A-1-2
25131-87L01	206A-2
25141-87L00	206A-5
25223-94400	206A-6
25232-96302	206A-3
25700-87L00	407A-30
	407B-30
	407C-30
	407D-30
	407E-30
	407F-30
	407G-30
	407H-30
	407J-30
	407K-30

PART NO.	FIG.NO.-REF.NO.
29103-93J00	315A-17
29116-93J00	180A-11
	180B-11
	180C-11
	180D-11
	180E-11
	180F-11
	180G-11
	180H-11
	180J-11
	180K-11
	206A-7
	401A-12
	401B-12
	401C-12
	401D-12
	401E-12
	401F-12
	401G-12
	401H-12
	401J-12
	401K-12
29116-93J10	160A-11
	160B-11
	160C-11
	160D-11
	160E-11
	160F-11
	160G-11
	160H-11
	160J-11
	160K-11
29141-93J20	407A-18
	407B-18
	407C-18
	407D-18
	407E-18
	407F-18
	407G-18
	407H-18
	407J-18
	407K-18
29404-93J10	180A-12
	180B-12
	180C-12
	180D-12
	180E-12
	180F-12
	180G-12
	180H-12

PART NO.	FIG.NO.-REF.NO.
	180J-12
	180K-12
30000	
31100-96J02	301A-1
31111-94900	340A-10
31123-94910	340A-4
31131-90J01	301A-2
31133-90J00	340A-5
31133-94900	340A-6
31135-90J00	301A-3
31135-94900	340A-8
31136-90J10	340A-7
31151-94J01	301A-4
31152-90J00	301A-5
31153-90J00	301A-6
31170-90J00	301A-7
31171-96J00	301A-8
31173-90J02	301A-9
31173-94910	340A-3
31191-96J00	301A-10
31220-94J00	301A-11
31281-92J10	337A-8
31310-90J00	301A-12
31311-93J00	340A-2
31320-93J00	301A-13
31341-93J00	301A-14
31343-90J00	301A-15
31344-90J00	301A-16
31360-93J01	301A-17
31912-87L00	301A-20
31913-93J00	301A-18
31914-93J00	301A-19
31918-87L00	301A-21
32102-87L00	303A-1
32120-87L10	303A-5
32160-87L00	303A-6
32800-87L00	310A-1
32890-87L01	310A-3
33220-64L10	303A-8
33410-87L00	310A-8
33634-96J00	322A-4
33799-97E00	340A-9
33810-90J10	322A-1

PART NO.	FIG.NO.-REF.NO.
33925-92J00	326A-15
	326B-15
	326C-15
	326D-15
	326E-15
	326F-15
	326G-15
	326H-15
	326J-15
	326K-15
	326E-14
	326F-14
	326G-14
	326J-14
	326H-14
	326K-14
33930-87LG0	326A-14
	326C-14
33930-87LH0	326B-14
	326D-14
34011-87L00	503A-1
34011-87L10	503A-10
34011-87L40	503A-25
34011-87L50	503A-37
34011-88L03	503A-45
34011-88L13	503A-51
34100-93J00	502A-3-1
	502B-3-1
	502C-3-1
	502D-3-1
	502E-3-1
	502F-3-1
	502G-3-1
	502H-3-1
	502J-3-1
	502K-3-1
34100-93J11	502A-3-2
	502B-3-2
	502C-3-2
	502D-3-2
	502E-3-2
	502F-3-2
	502G-3-2
	502H-3-2
	502J-3-2
	502K-3-2
34100-93J20	502A-3-3
	502B-3-3
	502C-3-3
	502D-3-3

PART NO.	FIG.NO.-REF.NO.
	502E-3-3
	502F-3-3
	502G-3-3
	502H-3-3
	502J-3-3
	502K-3-3
34100-93J31	502A-3-4
	502B-3-4
	502C-3-4
	502D-3-4
	502E-3-4
	502F-3-4
	502G-3-4
	502H-3-4
	502J-3-4
	502K-3-4
34100-93J40	502A-3-5
	502B-3-5
	502C-3-5
	502D-3-5
	502E-3-5
	502F-3-5
	502G-3-5
	502H-3-5
	502J-3-5
	502K-3-5
34100-93J51	502A-3-6
	502B-3-6
	502C-3-6
	502D-3-6
	502E-3-6
	502F-3-6
	502G-3-6
	502H-3-6
	502J-3-6
	502K-3-6
34100-93J60	502A-3-7
	502B-3-7
	502C-3-7
	502D-3-7
	502E-3-7
	502F-3-7
	502G-3-7
	502H-3-7
	502J-3-7
	502K-3-7
34120-98J01	502A-23
	502B-23
	502C-23
	502D-23

PART NO.	FIG.NO.-REF.NO.	PART NO.	FIG.NO.-REF.NO.	PART NO.	FIG.NO.-REF.NO.
	502E-23	34193-88L60	588A-5		502E-29-1
	502F-23	34200-87L00	444A-45		502F-29-1
	502G-23		444B-45		502G-29-1
	502H-23		444C-45		502H-29-1
	502J-23		444D-45	34200-93J51	502A-29-2
	502K-23		570A-44		502B-29-2
34190-87D00	502A-22		570B-44		502E-29-2
	502B-22		570C-44		502F-29-2
	502C-22		570D-44		502G-29-2
	502D-22		570E-44		502H-29-2
	502E-22		570F-44	34211-87L00	503A-3
	502F-22	34200-87L12	503A-2		503A-12
	502G-22		503A-11		503A-27
	502H-22		503A-26		503A-39
	502J-22		503A-38	34300-93J00	502A-10-1
	502K-22	34200-88L02	503A-46		502B-10-1
34190-88L00	588A-1	34200-93J00	460A-5-1		502C-10-1
34190-95500	502A-24		460B-5-1		502D-10-1
	502B-24		460C-5-1		502E-10-1
	502C-24		460D-5-1		502F-10-1
	502D-24		460E-5-1		502G-10-1
	502E-24		460F-5-1		502H-10-1
	502F-24		502A-20-1		502J-10-1
	502G-24		502B-20-1		502K-10-1
	502H-24		502C-20-1	34300-93J11	502A-10-2
	502J-24		502D-20-1		502B-10-2
	502K-24		502E-20-1		502C-10-2
34191-92E00	502A-5		502F-20-1		502D-10-2
	502A-17		502G-20-1		502E-10-2
	502B-5		502H-20-1		502F-10-2
	502B-17		502J-20-1		502G-10-2
	502C-5		502K-20-1		502H-10-2
	502C-17	34200-93J12	460A-5-2		502J-10-2
	502D-5		460B-5-2		502K-10-2
	502D-17		460C-5-2	34310-92E00	502A-11
	502E-5		460D-5-2		502B-11
	502E-17		460E-5-2		502C-11
	502F-5		460F-5-2		502D-11
	502F-17		502A-20-2		502E-11
	502G-5		502B-20-2		502F-11
	502G-17		502C-20-2		502G-11
	502H-5		502D-20-2		502H-11
	502H-17		502E-20-2		502J-11
	502J-5		502F-20-2		502K-11
	502J-17		502G-20-2	34360-92E00	502A-12
	502K-5		502H-20-2		502B-12
	502K-17		502J-20-2		502C-12
34193-88L00	588A-2		502K-20-2		502D-12
34193-88L20	588A-3	34200-93J40	502A-29-1		502E-12
34193-88L40	588A-4		502B-29-1		502F-12

PART NO.	FIG.NO.-REF.NO.	PART NO.	FIG.NO.-REF.NO.	PART NO.	FIG.NO.-REF.NO.
	502G-12		502C-8-2		460E-1-2
	502H-12		502D-8-2		460F-1-2
	502J-12		502E-8-2		502A-1-2
	502K-12		502F-8-2		502B-1-2
34455-88L00	588A-6		502G-8-2		502C-1-2
34455-88L10	588A-7		502H-8-2		502D-1-2
34500-93J00	460A-3-1		502J-8-2		502E-1-2
	460B-3-1		502K-8-2		502F-1-2
	460C-3-1	34650-93J20	502A-16-1		502G-1-2
	460D-3-1		502B-16-1		502H-1-2
	460E-3-1		502C-16-1		502J-1-2
	460F-3-1		502D-16-1		502K-1-2
	502A-14-1		502E-16-1	34810-88L00	588A-8
	502B-14-1		502F-16-1	34830-87J20	315A-5
	502C-14-1		502G-16-1	34840-98J11	315A-6
	502D-14-1		502H-16-1	34841-87L10	315A-9
	502E-14-1		502J-16-1	34842-87L01	315A-10
	502F-14-1		502K-16-1	34843-87L00	315A-11
	502G-14-1	34650-93J31	502A-16-2	34845-87L10	315A-12
	502H-14-1		502B-16-2	34846-87L00	315A-8
	502J-14-1		502C-16-2	34922-88L02	503A-47
	502K-14-1		502D-16-2		503A-53
34500-93J11	460A-3-2		502E-16-2	34960-88L00	588A-9
	460B-3-2		502F-16-2	36610-87L60	322A-3
	460C-3-2		502G-16-2	36611-87L00	322A-34
	460D-3-2		502H-16-2	36612-96J00	322A-14
	460E-3-2		502J-16-2	36615-96300	502A-7
	460F-3-2		502K-16-2		502B-7
	502A-14-2	34660-90J02	507A-1		502C-7
	502B-14-2	34800-88L01	503A-52		502D-7
	502C-14-2	34800-93J00	460A-1-1		502E-7
	502D-14-2		460B-1-1		502F-7
	502E-14-2		460C-1-1		502G-7
	502F-14-2		460D-1-1		502H-7
	502G-14-2		460E-1-1		502J-7
	502H-14-2		460F-1-1		502K-7
	502J-14-2		502A-1-1		503A-5
	502K-14-2		502B-1-1		503A-14
34600-93J00	502A-8-1		502C-1-1	36616-87L00	322A-19
	502B-8-1		502D-1-1	36617-87L00	322A-24
	502C-8-1		502E-1-1	36617-87L10	322A-26
	502D-8-1		502F-1-1	36617-87L20	322A-27
	502E-8-1		502G-1-1	36617-88L90	444A-46
	502F-8-1		502H-1-1		444B-46
	502G-8-1		502J-1-1		444C-46
	502H-8-1		502K-1-1		444D-46
	502J-8-1	34800-93J11	460A-1-2		570A-45
	502K-8-1		460B-1-2		570B-45
34600-93J11	502A-8-2		460C-1-2		570C-45
	502B-8-2		460D-1-2		570D-45

PART NO.	FIG.NO.-REF.NO.	PART NO.	FIG.NO.-REF.NO.	PART NO.	FIG.NO.-REF.NO.
	570E-45		521J-2-2		502D-30
	570F-45		521K-2-2		502E-34
36617-93J00	322A-25	36620-93J62	508A-54-3		502F-34
36618-43410	322A-15		508B-54-3		502G-34
36620-87L00	444A-5		508C-54-3		502H-34
	444B-5		508D-54-3		502J-30
	444C-5		508E-54-3		502K-30
	444D-5		508F-54-3	36663-98J10	502C-32
	570A-4		521C-2-3		502D-32
	570B-4		521D-2-3		502J-32
	570C-4		521J-2-3		502K-32
	570D-4		521K-2-3		503A-6
	570E-4	36625-93J10	322A-36		503A-16
	570F-4	36628-92E00	508A-3	36664-87L00	503A-30
36620-93J02	508A-54-1		508B-3		503A-41
	508B-54-1		508C-3	36664-88L00	503A-18
	508C-54-1		508D-3		503A-31
	508D-54-1		508E-3		503A-42
	508E-54-1		508F-3		588A-17
	508F-54-1	36630-92E00	521C-5	36665-87L00	503A-19
	521C-2-1		521D-5		503A-32
	521D-2-1		521J-5	36665-88L00	503A-20
	521J-2-1		521K-5		503A-33
	521K-2-1	36646-93J01	508A-2		503A-49
36620-93J10	521A-1-1		508B-2		503A-56
	521B-1-1		508C-2	36665-88L10	503A-21
	521E-1-1		508D-2		503A-34
	521F-1-1		508E-2		503A-50
	521G-1-1		508F-2		503A-57
	521H-1-1	36656-87L00	315A-18	36666-87L00	503A-22
36620-93J30	521A-2	36660-94480	521C-6		503A-35
	521B-2		521D-6		503A-43
	521E-2		521J-6	36666-88L00	588A-14
	521F-2		521K-6	36666-88L10	588A-15
	521G-2	36661-87L00	503A-4	36668-88L00	503A-58
	521H-2		503A-13	36682-92E00	502C-29
36620-93J40	521A-1-2	36662-88L00	503A-28		502D-29
	521B-1-2		503A-40		502J-29
	521E-1-2		503A-54		502K-29
	521F-1-2	36662-88L10	588A-10		503A-36
	521G-1-2	36662-88L20	588A-11		503A-44
	521H-1-2	36662-88L30	588A-12		521C-7
36620-93J52	508A-54-2	36663-88L00	503A-15		521D-7
	508B-54-2		503A-29		521J-7
	508C-54-2		503A-48		521K-7
	508D-54-2		503A-55	36721-96J00	322A-7
	508E-54-2	36663-88L10	588A-13	36737-96J00	322A-6
	508F-54-2	36663-98J00	502A-34	36738-87L00	322A-8
	521C-2-2		502B-34	36890-93J00	544A-16
	521D-2-2		502C-30		544B-16

PART NO.	FIG.NO.-REF.NO.	PART NO.	FIG.NO.-REF.NO.	PART NO.	FIG.NO.-REF.NO.
	544C-16		530C-1		530C-6
	544D-16		530D-1		530D-6
	544E-16		530E-1		530E-6
	544F-16		530F-1		530F-6
36894-87D00	336A-2	37100-96J24	530A-15	37139-99E20	530A-23
	336A-3		530B-15		530B-23
	336B-2		530C-15		530C-23
	336B-3		530D-15		530D-23
	336C-2		530E-15		530E-23
	336C-3		530F-15		530F-23
	336D-2	37110-87L01	444A-6	37141-99E00	444A-7-1
	336D-3		444B-6		444B-7-1
	336E-2		444C-6		444C-7-1
	336E-3		444D-6		444D-7-1
	336F-2		570A-5		508A-5-1
	336F-3		570B-5		508B-5-1
	336G-2		570C-5		508C-5-1
	336G-3		570D-5		508D-5-1
	336H-2		570E-5		508E-5-1
	336H-3		570F-5		508F-5-1
	336J-2	37110-93J01	530A-2		530A-3-1
	336J-3		530A-16		530A-17-1
	336K-2		530B-2		530B-3-1
	336K-3		530B-16		530B-17-1
	337A-23		530C-2		530C-3-1
36895-87D10	336A-4		530C-16		530C-17-1
	336B-4		530D-2		530D-3-1
	336C-4		530D-16		530D-17-1
	336D-4		530E-2		530E-3-1
	336E-4		530E-16		530E-17-1
	336F-4		530F-2		530F-3-1
	336G-4		530F-16		530F-17-1
	336H-4	37110-93J11	508A-4		570A-6-1
	336J-4		508B-4		570B-6-1
	336K-4		508C-4		570C-6-1
	337A-27		508D-4		570D-6-1
36990-87D00	503A-8		508E-4		570E-6-1
	503A-23		508F-4		570F-6-1
	521A-4	37112-88L90	444A-47	37141-99E10	444A-7-2
	521B-4		444B-47		444B-7-2
	521C-4		444C-47		444C-7-2
	521D-4		444D-47		444D-7-2
	521E-4		570A-46		508A-5-2
	521F-4		570B-46		508B-5-2
	521G-4		570C-46		508C-5-2
	521H-4		570D-46		508D-5-2
	521J-4		570E-46		508E-5-2
	521K-4		570F-46		508F-5-2
37100-96J00	530A-1	37139-99E00	530A-6		530A-3-2
	530B-1		530B-6		530A-17-2

PART NO.	FIG.NO.-REF.NO.
	530B-3-2
	530B-17-2
	530C-3-2
	530C-17-2
	530D-3-2
	530D-17-2
	530E-3-2
	530E-17-2
	530F-3-2
	530F-17-2
	570A-6-2
	570B-6-2
	570C-6-2
	570D-6-2
	570E-6-2
	570F-6-2
37141-99E20	444A-7-3
	444B-7-3
	444C-7-3
	444D-7-3
	508A-5-3
	508B-5-3
	508C-5-3
	508D-5-3
	508E-5-3
	508F-5-3
	530A-3-3
	530A-17-3
	530B-3-3
	530B-17-3
	530C-3-3
	530C-17-3
	530D-3-3
	530D-17-3
	530E-3-3
	530E-17-3
	530F-3-3
	530F-17-3
	570A-6-3
	570B-6-3
	570C-6-3
	570D-6-3
	570E-6-3
	570F-6-3
37141-99E30	444A-7-4
	444B-7-4
	444C-7-4
	444D-7-4
	508A-5-4
	508B-5-4

PART NO.	FIG.NO.-REF.NO.
	508C-5-4
	508D-5-4
	508E-5-4
	508F-5-4
	530A-3-4
	530A-17-4
	530B-3-4
	530B-17-4
	530C-3-4
	530C-17-4
	530D-3-4
	530D-17-4
	530E-3-4
	530E-17-4
	530F-3-4
	530F-17-4
	570A-6-4
	570B-6-4
	570C-6-4
	570D-6-4
	570E-6-4
	570F-6-4
37141-99E40	444A-7-5
	444B-7-5
	444C-7-5
	444D-7-5
	508A-5-5
	508B-5-5
	508C-5-5
	508D-5-5
	508E-5-5
	508F-5-5
	530A-3-5
	530A-17-5
	530B-3-5
	530B-17-5
	530C-3-5
	530C-17-5
	530D-3-5
	530D-17-5
	530E-3-5
	530E-17-5
	530F-3-5
	530F-17-5
	570A-6-5
	570B-6-5
	570C-6-5
	570D-6-5
	570E-6-5
	570F-6-5

PART NO.	FIG.NO.-REF.NO.
37141-99E50	444A-7-6
	444B-7-6
	444C-7-6
	444D-7-6
	508A-5-6
	508B-5-6
	508C-5-6
	508D-5-6
	508E-5-6
	508F-5-6
	530A-3-6
	530A-17-6
	530B-3-6
	530B-17-6
	530C-3-6
	530C-17-6
	530D-3-6
	530D-17-6
	530E-3-6
	530E-17-6
	530F-3-6
	530F-17-6
	570A-6-6
	570B-6-6
	570C-6-6
	570D-6-6
	570E-6-6
	570F-6-6
37141-99E60	444A-7-7
	444B-7-7
	444C-7-7
	444D-7-7
	508A-5-7
	508B-5-7
	508C-5-7
	508D-5-7
	508E-5-7
	508F-5-7
	530A-3-7
	530A-17-7
	530B-3-7
	530B-17-7
	530C-3-7
	530C-17-7
	530D-3-7
	530D-17-7
	530E-3-7
	530E-17-7
	530F-3-7
	530F-17-7

PART NO.	FIG.NO.-REF.NO.
	570A-6-7
	570B-6-7
	570C-6-7
	570D-6-7
	570E-6-7
	570F-6-7
37141-99E70	444A-7-8
	444B-7-8
	444C-7-8
	444D-7-8
	508A-5-8
	508B-5-8
	508C-5-8
	508D-5-8
	508E-5-8
	508F-5-8
	530A-3-8
	530A-17-8
	530B-3-8
	530B-17-8
	530C-3-8
	530C-17-8
	530D-3-8
	530D-17-8
	530E-3-8
	530E-17-8
	530F-3-8
	530F-17-8
	570A-6-8
	570B-6-8
	570C-6-8
	570D-6-8
	570E-6-8
	570F-6-8
37141-99E80	444A-7-9
	444B-7-9
	444C-7-9
	444D-7-9
	508A-5-9
	508B-5-9
	508C-5-9
	508D-5-9
	508E-5-9
	508F-5-9
	530A-3-9
	530A-17-9
	530B-3-9
	530B-17-9
	530C-3-9
	530C-17-9

PART NO.	FIG.NO.-REF.NO.
	530D-3-9
	530D-17-9
	530E-3-9
	530E-17-9
	530F-3-9
	530F-17-9
	570A-6-9
	570B-6-9
	570C-6-9
	570D-6-9
	570E-6-9
	570F-6-9
37141-99E90	444A-7-10
	444B-7-10
	444C-7-10
	444D-7-10
	508A-5-10
	508B-5-10
	508C-5-10
	508D-5-10
	508E-5-10
	508F-5-10
	530A-3-10
	530A-17-10
	530B-3-10
	530B-17-10
	530C-3-10
	530C-17-10
	530D-3-10
	530D-17-10
	530E-3-10
	530E-17-10
	530F-3-10
	530F-17-10
	570A-6-10
	570B-6-10
	570C-6-10
	570D-6-10
	570E-6-10
	570F-6-10
37141-99EA0	444A-7-11
	444B-7-11
	444C-7-11
	444D-7-11
	508A-5-11
	508B-5-11
	508C-5-11
	508D-5-11
	508E-5-11
	508F-5-11

PART NO.	FIG.NO.-REF.NO.
	530A-3-11
	530A-17-11
	530B-3-11
	530B-17-11
	530C-3-11
	530C-17-11
	530D-3-11
	530D-17-11
	530E-3-11
	530E-17-11
	530F-3-11
	530F-17-11
	570A-6-11
	570B-6-11
	570C-6-11
	570D-6-11
	570E-6-11
	570F-6-11
37141-99EB0	444A-7-12
	444B-7-12
	444C-7-12
	444D-7-12
	508A-5-12
	508B-5-12
	508C-5-12
	508D-5-12
	508E-5-12
	508F-5-12
	530A-3-12
	530A-17-12
	530B-3-12
	530B-17-12
	530C-3-12
	530C-17-12
	530D-3-12
	530D-17-12
	530E-3-12
	530E-17-12
	530F-3-12
	530F-17-12
	570A-6-12
	570B-6-12
	570C-6-12
	570D-6-12
	570E-6-12
	570F-6-12
37143-99E00	444A-8
	444B-8
	444C-8
	444D-8

PART NO.	FIG.NO.-REF.NO.	PART NO.	FIG.NO.-REF.NO.	PART NO.	FIG.NO.-REF.NO.
	508A-6		570E-8		326E-3
	508B-6		570F-8		326F-3
	508C-6	37210-93J00	530A-13		326G-3
	508D-6		530B-13		326H-3
	508E-6		530C-13		326J-3
	508F-6		530D-13		326K-3
	530A-4		530E-13	37803-93J04	530A-9
	530A-18		530F-13		530B-9
	530B-4	37212-93J00	530A-14		530C-9
	530B-18		530B-14		530D-9
	530C-4		530C-14		530E-9
	530C-18		530D-14		530F-9
	530D-4		530E-14	37805-93J00	530A-11
	530D-18		530F-14		530B-11
	530E-4	37721-93J00	326A-1		530C-11
	530E-18		326B-1		530D-11
	530F-4		326C-1		530E-11
	530F-18		326D-1		530F-11
	570A-7		326E-1	37820-87L01	444A-10
	570B-7		326F-1		444B-10
	570C-7		326G-1		444C-10
	570D-7		326H-1		444D-10
	570E-7		326J-1		570A-9
	570F-7		326K-1		570B-9
37149-93J00	444A-9	37721-93J91	508A-8		570C-9
	444B-9		508B-8		570D-9
	444C-9		508C-8		570E-9
	444D-9		508D-8		570F-9
	508A-7		508E-8	37820-93J04	508A-9
	508B-7		508F-8		508B-9
	508C-7	37721-95500	545A-11		508C-9
	508D-7		545B-11		508D-9
	508E-7		545C-11		508E-9
	508F-7		545D-11		508F-9
	530A-5		545E-11		530A-20
	530A-19		545F-11		530B-20
	530B-5	37726-87L00	326A-4		530C-20
	530B-19		326B-4		530D-20
	530C-5		326C-4		530E-20
	530C-19		326D-4		530F-20
	530D-5		326E-4	37820-99E01	315A-14
	530D-19		326F-4	37823-92E01	444A-11
	530E-5		326G-4		444B-11
	530E-19		326H-4		444C-11
	530F-5		326J-4		444D-11
	530F-19		326K-4		508A-10
	570A-8	37726-90J10	326A-3		508B-10
	570B-8		326B-3		508C-10
	570C-8		326C-3		508D-10
	570D-8		326D-3		508E-10

PART NO.	FIG.NO.-REF.NO.	PART NO.	FIG.NO.-REF.NO.	PART NO.	FIG.NO.-REF.NO.
	508F-10		570F-47		570D-14
	530A-21	37850-87L00	444A-14		570E-14
	530B-21		444B-14		570F-14
	530C-21		444C-14	37852-88L90	444A-50
	530D-21		444D-14		444B-50
	530E-21		570A-13		444C-50
	530F-21		570B-13		444D-50
	570A-10		570C-13		570A-49
	570B-10		570D-13		570B-49
	570C-10		570E-13		570C-49
	570D-10		570F-13		570D-49
	570E-10	37850-90J05	508A-12		570E-49
	570F-10		508B-12		570F-49
37825-99E00	530A-10		508C-12	37853-88L90	444A-35
	530B-10		508D-12		444B-35
	530C-10		508E-12		444C-35
	530D-10		508F-12		444D-35
	530E-10	37850-92J00	326A-6		570A-34
	530F-10		326B-6		570B-34
37826-92J00	444A-12		326C-6		570C-34
	444B-12		326D-6		570D-34
	444C-12		326E-6		570E-34
	444D-12		326F-6		570F-34
	508A-11		326G-6	37854-88L90	444A-59
	508B-11		326H-6		444B-59
	508C-11		326J-6		444C-59
	508D-11		326K-6		444D-59
	508E-11	37850-93J10	544A-4		570A-74
	508F-11		544B-4		570B-74
	530A-22		544C-4		570C-74
	530B-22		544D-4		570D-74
	530C-22		544E-4		570E-74
	530D-22		544F-4		570F-74
	530E-22	37851-88L90	444A-49	37855-88L90	444A-58
	530F-22		444B-49		444B-58
	570A-11		444C-49		444C-58
	570B-11		444D-49		444D-58
	570C-11		570A-48		570A-73
	570D-11		570B-48		570B-73
	570E-11		570C-48		570C-73
	570F-11		570D-48		570D-73
37835-95D00	444A-48		570E-48		570E-73
	444B-48		570F-48		570F-73
	444C-48	37852-87J00	444A-15	37855-99E00	530A-12
	444D-48		444B-15		530B-12
	570A-47		444C-15		530C-12
	570B-47		444D-15		530D-12
	570C-47		570A-14		530E-12
	570D-47		570B-14		530F-12
	570E-47		570C-14	37856-92J00	326A-7

PART NO.	FIG.NO.-REF.NO.
	326B-7
	326C-7
	326D-7
	326E-7
	326F-7
	326G-7
	326H-7
	326J-7
	326K-7
37857-92J00	326A-8
	326B-8
	326C-8
	326D-8
	326E-8
	326F-8
	326G-8
	326H-8
	326J-8
	326K-8
37859-90J00	508A-51
	508B-51
	508C-51
	508D-51
	508E-51
	508F-51
37860-87L00	502A-31
	502B-31
	502E-31
	502F-31
	502G-31
	502H-31
37861-87L10	444A-51
	444B-51
	444C-51
	444D-51
	570A-50
	570B-50
	570C-50
	570D-50
	570E-50
	570F-50
37862-87L00	502A-32
	502B-32
	502E-32
	502F-32
	502G-32
	502H-32
37864-88L90	444A-52
	444B-52
	444C-52

PART NO.	FIG.NO.-REF.NO.
	444D-52
	570A-51
	570B-51
	570C-51
	570D-51
	570E-51
	570F-51
38100-87L01	337A-9
	340A-1
38410-93J12	326A-11
	326B-11
	326C-11
	326D-11
	326E-11
	326F-11
	326G-11
	326H-11
	326J-11
	326K-11
38415-93J00	326A-12
	326B-12
	326C-12
	326D-12
	326E-12
	326F-12
	326G-12
	326H-12
	326J-12
	326K-12
38500-93J00	521A-3
	521B-3
	521C-1
	521D-1
	521E-3
	521F-3
	521G-3
	521H-3
	521J-1
	521K-1
38500-93J90	444A-13
	444B-13
	444C-13
	444D-13
	508A-13
	508B-13
	508C-13
	508D-13
	508E-13
	508F-13
	530A-7

PART NO.	FIG.NO.-REF.NO.
	530A-25
	530B-7
	530B-25
	530C-7
	530C-25
	530D-7
	530D-25
	530E-7
	530E-25
	530F-7
	530F-25
	570A-12
	570B-12
	570C-12
	570D-12
	570E-12
	570F-12
38860-76F01	322A-9
	322A-10
39950-87L00	503A-9
	503A-24
39950-88L00	588A-16
41111-87L10-0EP	335A-1-1
	335B-1-1
	335C-1
	335D-1
	335E-1
	335F-1
	335G-1-1
	335H-1-1
	335J-1
	335K-1
41111-87L10-Y5S	335A-1-2
	335B-1-2
	335G-1-2
	335H-1-2
41121-87L10-0EP	335A-2-1
	335B-2-1
	335C-2
	335D-2
	335E-2
	335F-2

40000

PART NO.	FIG.NO.-REF.NO.
	335G-2-1
	335H-2-1
	335J-2
	335K-2
41121-87L10-Y5S	335A-2-2
	335B-2-2
	335G-2-2
	335H-2-2
41130-87L11	335A-3
	335B-3
	335C-3
	335D-3
	335E-3
	335F-3
	335G-3
	335H-3
	335J-3
	335K-3
41135-93J11	335A-4
	335B-4
	335C-4
	335D-4
	335E-4
	335F-4
	335G-4
	335H-4
	335J-4
	335K-4
41161-94400	442A-1
	442B-1
	442C-2
	442D-2
	442E-1
	442F-1
	442G-1
	442H-1
	442J-2
	442K-2
41220-93J11	336A-21
	336B-21
	336C-17
	336D-17
	336E-21
	336F-21
	336G-21
	336H-21
	336J-17
	336K-17
41224-95E01	336A-22
	336B-22

PART NO.	FIG.NO.-REF.NO.
	336C-18
	336D-18
	336E-22
	336F-22
	336G-22
	336H-22
	336J-18
	336K-18
41230-87L00	336A-23
	336B-23
	336C-19
	336D-19
	336E-23
	336F-23
	336G-23
	336H-23
	336J-19
	336K-19
41233-95E10	336A-24
	336B-24
	336C-20
	336D-20
	336E-24
	336F-24
	336G-24
	336H-24
	336J-20
	336K-20
41234-93J11	336A-25
	336B-25
	336C-21
	336D-21
	336E-25
	336F-25
	336G-25
	336H-25
	336J-21
	336K-21
43111-87L20-0EP	336A-5-1
	336B-5-1
	336C-5
	336D-5
	336E-5
	336F-5
	336G-5-1
	336H-5-1
	336J-5
	336K-5
43111-87L20-Y5S	336A-5-2
	336B-5-2

PART NO.	FIG.NO.-REF.NO.
	336G-5-2
	336H-5-2
43211-93J00	336A-6
	336B-6
	336C-6
	336D-6
	336E-6
	336F-6
	336G-6
	336H-6
	336J-6
	336K-6
43711-97E01	336A-7
	336B-7
	336C-7
	336D-7
	336E-7
	336F-7
	336G-7
	336H-7
	336J-7
	336K-7
43750-87L20-0EP	336A-8-1
	336B-8-1
	336C-8
	336D-8
	336E-8
	336F-8
	336G-8-1
	336H-8-1
	336J-8
	336K-8
43750-87L20-Y5S	336A-8-2
	336B-8-2
	336G-8-2
	336H-8-2
43755-87L00	336A-17
	336B-17
	336E-17
	336F-17
	336G-17
	336H-17
43761-88L01-0EP	444A-1
	444B-1
	444C-1
	444D-1
	570A-58
	570B-58
	570C-58
	570D-58

PART NO.	FIG.NO.-REF.NO.
	570E-58
	570F-58
43762-88L00	444A-77
	444B-77
	444C-77
	444D-77
	570A-59
	570B-59
	570C-59
	570D-59
	570E-59
	570F-59
43768-88L00	444A-78
	444B-78
	444C-78
	444D-78
	570A-60
	570B-60
	570C-60
	570D-60
	570E-60
	570F-60
43770-99E03	444A-75
	444B-75
	444C-75
	444D-75
	570A-70
	570B-70
	570C-70
	570D-70
	570E-70
	570F-70
43776-87L00	444A-73
	444B-73
	444C-73
	444D-73
	570A-61
	570B-61
	570C-61
	570D-61
	570E-61
	570F-61
48000-87L03	337A-1
48121-90J00	337A-25
48321-90J00	337A-19
48325-87L00	337A-21
48326-95E00	337A-20
48400-87L02	337A-2
48502-87L02	337A-10
48557-90J00	337A-6

PART NO.	FIG.NO.-REF.NO.
48571-87L00	337A-4
48572-87L00	337A-5
48582-95E01	337A-11
48583-95E00	337A-12
48585-95E00	337A-13
48588-90J00	337A-15
48611-87L00	337A-3
48862-87J20	337A-7
48862-90J21	337A-18
48862-92J20	337A-16
48862-92J30	337A-17
48864-96J10	337A-14
51111-87L00-0EP	401A-1-1
	401B-1-1
	401C-1
	401D-1
	401E-1
	401F-1
	401G-1-1
	401H-1-1
	401J-1
	401K-1
51111-87L00-Y5S	401A-1-2
	401B-1-2
	401G-1-2
	401H-1-2
51115-87L00	401A-2
	401B-2
	401C-2
	401D-2
	401E-2
	401F-2
	401G-2
	401H-2
	401J-2
	401K-2
51117-87L00	401A-3
	401B-3
	401C-3
	401D-3
	401E-3
	401F-3

50000

PART NO.	FIG.NO.-REF.NO.
	401G-3
	401H-3
	401J-3
	401K-3
51122-87L00	401A-20
	401B-20
	401C-20
	401D-20
	401E-20
	401F-20
	401G-20
	401H-20
	401J-20
	401K-20
51123-87L00	401A-21
	401B-21
	401C-21
	401D-21
	401E-21
	401F-21
	401G-21
	401H-21
	401J-21
	401K-21
	585A-9
51211-87L10	401A-4
	401B-4
	401C-4
	401D-4
	401E-4
	401F-4
	401G-4
	401H-4
	401J-4
	401K-4
	585A-10
52111-87L00-0EP	405A-1-1
	405B-1-1
	405C-1
	405D-1
	405E-1
	405F-1
	405G-1-1
	405H-1-1
	405J-1
	405K-1
52111-87L00-Y5S	405A-1-2
	405B-1-2
	405C-1-2
	405D-1-2
	405E-1-2
	405F-1-2
	405G-1-2
	405H-1-2

PART NO.	FIG.NO.-REF.NO.
52131-87L00-0EP	405A-4-1
	405B-4-1
	405C-4
	405D-4
	405E-4
	405F-4
	405G-4-1
	405H-4-1
	405J-4
	405K-4
52131-87L00-Y5S	405A-4-2
	405B-4-2
	405G-4-2
	405H-4-2
52331-87L00	585A-11
52332-87L10	407A-11
	407B-11
	407C-11
	407D-11
	407E-11
	407F-11
	407G-11
	407H-11
	407J-11
	407K-11
54114-90J01	405A-17
	405B-17
	405C-17
	405D-17
	405E-17
	405F-17
	405G-17
	405H-17
	405J-17
	405K-17
54120-87L10	401A-23
	401B-23
	401C-23
	401D-23
	401E-23
	401F-23
	401G-23
	401H-23
	401J-23
	401K-23
54122-87L00	401A-24
	401B-24
	401C-24
	401D-24
	401E-24

PART NO.	FIG.NO.-REF.NO.
	401F-24
	401G-24
	401H-24
	401J-24
	401K-24
54130-87L00	401A-25
	401B-25
	401C-25
	401D-25
	401E-25
	401F-25
	401G-25
	401H-25
	401J-25
	401K-25
54137-87L00-0EP	401A-29-1
	401B-29-1
	401C-29
	401D-29
	401E-29
	401F-29
	401G-29-1
	401H-29-1
	401J-29
	401K-29
54137-87L00-Y5S	401A-29-2
	401B-29-2
	401G-29-2
	401H-29-2
54140-87L10	401A-32
	401B-32
	401C-32
	401D-32
	401E-32
	401F-32
	401G-32
	401H-32
	401J-32
	401K-32
54151-87L00	405A-12
	405B-12
	405C-12
	405D-12
	405E-12
	405F-12
	405G-12
	405H-12
	405J-12
	405K-12
54160-87L10	405A-13

PART NO.	FIG.NO.-REF.NO.
	405B-13
	405C-13
	405D-13
	405E-13
	405F-13
	405G-13
	405H-13
	405J-13
	405K-13
54166-95J02	401A-26
	401B-26
	401C-26
	401D-26
	401E-26
	401F-26
	401G-26
	401H-26
	401J-26
	401K-26
	405A-14
	405B-14
	405C-14
	405D-14
	405E-14
	405F-14
	405G-14
	405H-14
	405J-14
	405K-14
54167-87L10	405A-16
	405B-16
	405C-16
	405D-16
	405E-16
	405F-16
	405G-16
	405H-16
	405J-16
	405K-16
54180-88L00	405A-22
	405B-22
	405C-22
	405D-22
	405E-22
	405F-22
	405G-22
	405H-22
	405J-22
	405K-22
54211-90J01-0EP	405A-18-1

PART NO.	FIG.NO.-REF.NO.
	405B-18-1
	405C-18
	405D-18
	405E-18
	405F-18
	405G-18-1
	405H-18-1
	405J-18
	405K-18
54211-90J01-Y5S	405A-18-2
	405B-18-2
	405G-18-2
	405H-18-2
54221-87L00-0EP	405A-19-1
	405B-19-1
	405C-19
	405D-19
	405E-19
	405F-19
	405G-19-1
	405H-19-1
	405J-19
	405K-19
54221-87L00-Y5S	405A-19-2
	405B-19-2
	405G-19-2
	405H-19-2
54231-87L00-0EP	405A-20-1
	405B-20-1
	405C-20
	405D-20
	405E-20
	405F-20
	405G-20-1
	405H-20-1
	405J-20
	405K-20
54231-87L00-Y5S	405A-20-2
	405B-20-2
	405G-20-2
	405H-20-2
55110-87L30-0EP	407A-1-1
	407B-1-1
	407C-1
	407D-1
	407E-1
	407F-1
	407G-1-1
	407H-1-1
	407J-1

PART NO.	FIG.NO.-REF.NO.
	407K-1
55110-87L30-Y5S	407A-1-2
	407B-1-2
	407G-1-2
	407H-1-2
55125-90J01	407A-4
	407B-4
	407C-4
	407D-4
	407E-4
	407F-4
	407G-4
	407H-4
	407J-4
	407K-4
55127-87D00	407A-12
	407B-12
	407C-12
	407D-12
	407E-12
	407F-12
	407G-12
	407H-12
	407J-12
	407K-12
	502A-26
	502B-26
	502C-26
	502D-26
	502E-26
	502F-26
	502G-26
	502H-26
	502J-26
	502K-26
55320-94900	335A-8
	335B-8
	335C-8
	335D-8
	335E-8
	335F-8
	335G-8
	335H-8
	335J-8
	335K-8
55321-87J00	111A-7
	140A-6
	405A-10
	405B-10
	405C-10

PART NO.	FIG.NO.-REF.NO.
	405D-10
	405E-10
	405F-10
	405G-10
	405H-10
	405J-10
	405K-10
	407A-8-1
	407B-8-1
	407C-8-1
	407D-8-1
	407E-8-1
	407F-8-1
	407G-8-1
	407H-8-1
	407J-8-1
	407K-8-1
55321-87J10	407A-8-2
	407B-8-2
	407C-8-2
	407D-8-2
	407E-8-2
	407F-8-2
	407G-8-2
	407H-8-2
	407J-8-2
	407K-8-2
55321-94910	335A-5
	335B-5
	335C-5
	335D-5
	335E-5
	335F-5
	335G-5
	335H-5
	335J-5
	335K-5
55333-87L00	407A-10
	407B-10
	407C-10
	407D-10
	407E-10
	407F-10
	407G-10
	407H-10
	407J-10
	407K-10
56120-87L30-0EP	220A-24-1
	220B-24-1
	220C-24

PART NO.	FIG.NO.-REF.NO.
	220D-24
	220E-24
	220F-24
	220G-24-1
	220H-24-1
	220J-24
	220K-24
56120-87L30-Y5S	220A-24-2
	220B-24-2
	220G-24-2
	220H-24-2
56130-87L01	220A-30
	220B-30
	220C-30
	220D-30
	220E-30
	220F-30
	220G-30
	220H-30
	220J-30
	220K-30
57110-87L20	220A-1-1
	220B-1-1
	220C-1-1
	220D-1-1
	220E-1-1
	220F-1-1
	220G-1-1
	220H-1-1
	220J-1-1
	220K-1-1
57110-87L30	220A-1-2
	220B-1-2
	220C-1-2
	220D-1-2
	220E-1-2
	220F-1-2
	220G-1-2
	220H-1-2
	220J-1-2
	220K-1-2
57130-87E02	405A-9
	405B-9
	405C-9
	405D-9
	405E-9
	405F-9
	405G-9
	405H-9
	405J-9

PART NO.	FIG.NO.-REF.NO.
	405K-9
57133-87L01	220A-2
	220B-2
	220C-2
	220D-2
	220E-2
	220F-2
	220G-2
	220H-2
	220J-2
	220K-2
57300-87880	220A-5
	220B-5
	220C-5
	220D-5
	220E-5
	220F-5
	220G-5
	220H-5
	220J-5
	220K-5
57500-87873	220A-8
	220B-8
	220C-8
	220D-8
	220E-8
	220F-8
	220G-8
	220H-8
	220J-8
	220K-8
57500-87882	220A-13
	220B-13
	220C-13
	220D-13
	220E-13
	220F-13
	220G-13
	220H-13
	220J-13
	220K-13
57610-87L00	220A-15
	220B-15
	220C-15
	220D-15
	220E-15
	220F-15
	220G-15
	220H-15
	220J-15

PART NO.	FIG.NO.-REF.NO.
	220K-15
57621-87L10	220A-16
	220B-16
	220C-16
	220D-16
	220E-16
	220F-16
	220G-16
	220H-16
	220J-16
	220K-16
57630-90J00	407A-29
	407B-29
	407C-29
	407D-29
	407E-29
	407F-29
	407G-29
	407H-29
	407J-29
	407K-29
57631-87L00	220A-17
	220B-17
	220C-17
	220D-17
	220E-17
	220F-17
	220G-17
	220H-17
	220J-17
	220K-17
57632-87L01	407A-24
	407B-24
	407C-24
	407D-24
	407E-24
	407F-24
	407G-24
	407H-24
	407J-24
	407K-24
57633-90J02	407A-25
	407B-25
	407C-25
	407D-25
	407E-25
	407F-25
	407G-25
	407H-25
	407J-25

PART NO.	FIG.NO.-REF.NO.	PART NO.	FIG.NO.-REF.NO.	PART NO.	FIG.NO.-REF.NO.
	407K-25		407K-20-5		407K-20-10
58100-87LA0-019	407A-20-1	58100-87LF0-019	407A-20-6	58100-90JE0-019	407A-20-11
	407B-20-1		407B-20-6		407B-20-11
	407C-20-1		407C-20-6		407C-20-11
	407D-20-1		407D-20-6		407D-20-11
	407E-20-1		407E-20-6		407E-20-11
	407F-20-1		407F-20-6		407F-20-11
	407G-20-1		407G-20-6		407G-20-11
	407H-20-1		407H-20-6		407H-20-11
	407J-20-1		407J-20-6		407J-20-11
	407K-20-1		407K-20-6		407K-20-11
58100-87LB0-019	407A-20-2	58100-90JA0-019	407A-20-7	58105-90J00	407A-21
	407B-20-2		407B-20-7		407B-21
	407C-20-2		407C-20-7		407C-21
	407D-20-2		407D-20-7		407D-21
	407E-20-2		407E-20-7		407E-21
	407F-20-2		407F-20-7		407F-21
	407G-20-2		407G-20-7		407G-21
	407H-20-2		407H-20-7		407H-21
	407J-20-2		407J-20-7		407J-21
	407K-20-2		407K-20-7		407K-21
58100-87LC0-019	407A-20-3	58100-90JB0-019	407A-20-8	58120-90J00	407A-23
	407B-20-3		407B-20-8		407B-23
	407C-20-3		407C-20-8		407C-23
	407D-20-3		407D-20-8		407D-23
	407E-20-3		407E-20-8		407E-23
	407F-20-3		407F-20-8		407F-23
	407G-20-3		407G-20-8		407G-23
	407H-20-3		407H-20-8		407H-23
	407J-20-3		407J-20-8		407J-23
	407K-20-3		407K-20-8		407K-23
58100-87LD0-019	407A-20-4	58100-90JC0-019	407A-20-9	58200-90J00	407A-22-1
	407B-20-4		407B-20-9		407B-22-1
	407C-20-4		407C-20-9		407C-22-1
	407D-20-4		407D-20-9		407D-22-1
	407E-20-4		407E-20-9		407E-22-1
	407F-20-4		407F-20-9		407F-22-1
	407G-20-4		407G-20-9		407G-22-1
	407H-20-4		407H-20-9		407H-22-1
	407J-20-4		407J-20-9		407J-22-1
	407K-20-4		407K-20-9		407K-22-1
58100-87LE0-019	407A-20-5	58100-90JD0-019	407A-20-10	58200-90J10	407A-22-2
	407B-20-5		407B-20-10		407B-22-2
	407C-20-5		407C-20-10		407C-22-2
	407D-20-5		407D-20-10		407D-22-2
	407E-20-5		407E-20-10		407E-22-2
	407F-20-5		407F-20-10		407F-22-2
	407G-20-5		407G-20-10		407G-22-2
	407H-20-5		407H-20-10		407H-22-2
	407J-20-5		407J-20-10		407J-22-2

PART NO.	FIG.NO.-REF.NO.	PART NO.	FIG.NO.-REF.NO.	PART NO.	FIG.NO.-REF.NO.
	407K-22-2		407K-20-14	61124-87L00	410A-29
58200-90J20	407A-22-3	58200-92J70	407A-20-15		410B-29
	407B-22-3		407B-20-15		410C-29
	407C-22-3		407C-20-15		410D-29
	407D-22-3		407D-20-15		410E-29
	407E-22-3		407E-20-15		410F-29
	407F-22-3		407F-20-15		410G-29
	407G-22-3		407G-20-15		410H-29
	407H-22-3		407H-20-15		410J-29
	407J-22-3		407J-20-15		410K-29
	407K-22-3		407K-20-15	61134-87L00	410A-2
58200-90J30	407A-22-4	58200-92J80	407A-20-16		410B-2
	407B-22-4		407B-20-16		410C-2
	407C-22-4		407C-20-16		410D-2
	407D-22-4		407D-20-16		410E-2
	407E-22-4		407E-20-16		410F-2
	407F-22-4		407F-20-16		410G-2
	407G-22-4		407G-20-16		410H-2
	407H-22-4		407H-20-16		410J-2
	407J-22-4		407J-20-16		410K-2
	407K-22-4		407K-20-16	61400-87Y80-0EP	420A-1-1
58200-92J40	407A-20-12	58200-92J90	407A-20-17		420B-1-1
	407B-20-12		407B-20-17		420C-1
	407C-20-12		407C-20-17		420D-1
	407D-20-12		407D-20-17		420E-1
	407E-20-12		407E-20-17		420F-1
	407F-20-12		407F-20-17		420G-1-1
	407G-20-12		407G-20-17		420H-1-1
	407H-20-12		407H-20-17		420J-1
	407J-20-12		407J-20-17		420K-1
	407K-20-12		407K-20-17	61400-87Y90-Y5S	420A-1-2
58200-92J50	407A-20-13				420B-1-2
	407B-20-13				420G-1-2
	407C-20-13				420H-1-2
	407D-20-13			61422-87L60	420E-13
	407E-20-13				420F-13
	407F-20-13			61422-87L70	420G-13-1
	407G-20-13	60000			420H-13-1
	407H-20-13				420J-13
	407J-20-13				420K-13
	407K-20-13	61112-99E01	410A-1	61422-87L80	420A-13-1
58200-92J60	407A-20-14		410B-1		420B-13-1
	407B-20-14		410C-1		420C-13
	407C-20-14		410D-1		420D-13
	407D-20-14		410E-1	61431-87L21-0EP	420A-2-1
	407E-20-14		410F-1		420B-2-1
	407F-20-14		410G-1		420C-2
	407G-20-14		410H-1		420D-2
	407H-20-14		410J-1		420E-2
	407J-20-14		410K-1		420F-2

PART NO.	FIG.NO.-REF.NO.
	420G-2-1
	420H-2-1
	420J-2
	420K-2
61431-87L21-Y5S	420A-2-2
	420B-2-2
	420G-2-2
	420H-2-2
61435-87L60	420E-14
	420F-14
61435-87L70	420G-14-1
	420H-14-1
	420J-14
	420K-14
61435-87L80	420A-14-1
	420B-14-1
	420C-14
	420D-14
61435-87L90	420A-13-2
	420A-14-2
	420B-13-2
	420B-14-2
61435-87LA0	420G-13-2
	420G-14-2
	420H-13-2
	420H-14-2
61439-87L00	420A-3
	420B-3
	420C-3
	420D-3
	420E-3
	420F-3
	420G-3
	420H-3
	420J-3
	420K-3
61443-87L20	420A-9-1
	420B-9-1
	420C-9
	420D-9
	420E-9
	420F-9
	420G-9-1
	420H-9-1
	420J-9
	420K-9
61443-87L30	420A-9-2
	420B-9-2
	420G-9-2
	420H-9-2

PART NO.	FIG.NO.-REF.NO.
61446-87L12	420A-11-1
	420B-11-1
	420C-11
	420D-11
	420E-11
	420F-11
	420G-11-1
	420H-11-1
	420J-11
	420K-11
61446-87L20	420A-11-2
	420B-11-2
	420G-11-2
	420H-11-2
61453-87L20	420A-10-1
	420B-10-1
	420C-10
	420D-10
	420E-10
	420F-10
	420G-10-1
	420H-10-1
	420J-10
	420K-10
61453-87L30	420A-10-2
	420B-10-2
	420G-10-2
	420H-10-2
61458-99E70	420A-15
	420B-15
	420C-15
	420D-15
	420E-15
	420F-15
	420G-15
	420H-15
	420J-15
	420K-15
61471-98J00	420A-17
	420B-17
	420C-17
	420D-17
	420E-17
	420F-17
	420G-17
	420H-17
	420J-17
	420K-17
61472-93E32	136B-6
	136D-6

PART NO.	FIG.NO.-REF.NO.
	136F-6
	136H-6
	136K-6
61472-93E40	136A-6
	136C-6
	136E-6
	136G-6
	136J-6
61476-87L00	420A-5
	420B-5
	420C-5
	420D-5
	420E-5
	420F-5
	420G-5
	420H-5
	420J-5
	420K-5
61493-96J00	136A-8
	136B-8
	136C-8
	136D-8
	136E-8
	136F-8
	136G-8
	136H-8
	136J-8
	136K-8
61494-87L00	136A-9
	136B-9
	136C-9
	136D-9
	136E-9
	136F-9
	136G-9
	136H-9
	136J-9
	136K-9
61610-93J00	420A-6
	420B-6
	420C-6
	420D-6
	420E-6
	420F-6
	420G-6
	420H-6
	420J-6
	420K-6
61632-93J00	410A-17
	410B-17

PART NO.	FIG.NO.-REF.NO.
	410C-17
	410D-17
	410E-17
	410F-17
	410G-17
	410H-17
	410J-17
	410K-17
61633-87L00	410A-20
	410B-20
	410C-20
	410D-20
	410E-20
	410F-20
	410G-20
	410H-20
	410J-20
	410K-20
61641-87L00	410A-18
	410B-18
	410C-18
	410D-18
	410E-18
	410F-18
	410G-18
	410H-18
	410J-18
	410K-18
61645-87L00	410A-21
	410B-21
	410C-21
	410D-21
	410E-21
	410F-21
	410G-21
	410H-21
	410J-21
	410K-21
61673-93J11	410A-22
	410B-22
	410C-22
	410D-22
	410E-22
	410F-22
	410G-22
	410H-22
	410J-22
	410K-22
61811-87L20-0EP	410A-3-1
	410B-3-1

PART NO.	FIG.NO.-REF.NO.
	410C-3
	410D-3
	410E-3
	410F-3
	410G-3-1
	410H-3-1
	410J-3
	410K-3
61811-87L20-Y5S	410A-3-2
	410B-3-2
	410G-3-2
	410H-3-2
61821-87L21-0EP	410A-4-1
	410B-4-1
	410C-4
	410D-4
	410E-4
	410F-4
	410G-4-1
	410H-4-1
	410J-4
	410K-4
61821-87L21-Y5S	410A-4-2
	410B-4-2
	410G-4-2
	410H-4-2
61827-87L00	410A-9
	410B-9
	410C-9
	410D-9
	410E-9
	410F-9
	410G-9
	410H-9
	410J-9
	410K-9
61831-87L20-0EP	410A-11-1
	410B-11-1
	410C-11
	410D-11
	410E-11
	410F-11
	410G-11-1
	410H-11-1
	410J-11
	410K-11
61831-87L20-Y5S	410A-11-2
	410B-11-2
	410G-11-2
	410H-11-2

PART NO.	FIG.NO.-REF.NO.
63002-87L12-0EP	570A-1
	570B-1
	570C-1
	570D-1
	570E-1
	570F-1
63110-87L11-0EP	444A-2
	444B-2
	444C-2
	444D-2
63111-88L00-0EP	444A-64
	444B-64
	444C-64
	444D-64
	570A-79
	570B-79
	570C-79
	570D-79
	570E-79
	570F-79
63115-88L00	444A-69
	444B-69
	444C-69
	444D-69
	570A-66
	570B-66
	570C-66
	570D-66
	570E-66
	570F-66
63121-88L00	444A-16
	444B-16
	444C-16
	444D-16
	570A-15
	570B-15
	570C-15
	570D-15
	570E-15
	570F-15
63132-88L00	444A-76
	444B-76
	444C-76
	444D-76
	570A-71
	570B-71
	570C-71
	570D-71
	570E-71
	570F-71

PART NO.	FIG.NO.-REF.NO.	PART NO.	FIG.NO.-REF.NO.	PART NO.	FIG.NO.-REF.NO.
63210-88L00	444A-17	63227-93200	444A-21	63247-99J00	444A-63
	444B-17		444B-21		444B-63
	444C-17		444C-21		444C-63
	444D-17		444D-21		444D-63
	570A-16		570A-20		570A-78
	570B-16		570B-20		570B-78
	570C-16		570C-20		570C-78
	570D-16		570D-20		570D-78
	570E-16		570E-20		570E-78
	570F-16		570F-20		570F-78
63215-93110	444A-72	63235-88L00	444A-22	63248-99J00	444A-31
	444B-72		444B-22		444B-31
	444C-72		444C-22		444C-31
	444D-72		444D-22		444D-31
	570A-68		570A-21		570A-30
	570B-68		570B-21		570B-30
	570C-68		570C-21		570C-30
	570D-68		570D-21		570D-30
	570E-68		570E-21		570E-30
	570F-68		570F-21		570F-30
63221-88L00	444A-18	63244-99J00	444A-53	63250-88L00	444A-24
	444B-18		444B-53		444B-24
	444C-18		444C-53		444C-24
	444D-18		444D-53		444D-24
	570A-17		570A-52		570A-23
	570B-17		570B-52		570B-23
	570C-17		570C-52		570C-23
	570D-17		570D-52		570D-23
	570E-17		570E-52		570E-23
	570F-17		570F-52		570F-23
63223-92D00	444A-19	63245-99J00	444A-54	63251-87J00	444A-25
	444B-19		444B-54		444B-25
	444C-19		444C-54		444C-25
	444D-19		444D-54		444D-25
	570A-18		570A-53		570A-24
	570B-18		570B-53		570B-24
	570C-18		570C-53		570C-24
	570D-18		570D-53		570D-24
	570E-18		570E-53		570E-24
	570F-18		570F-53		570F-24
63225-88L00	444A-20	63246-88L00	444A-23	63251-88L90	444A-57
	444B-20		444B-23		444B-57
	444C-20		444C-23		444C-57
	444D-20		444D-23		444D-57
	570A-19		570A-22		570A-72
	570B-19		570B-22		570B-72
	570C-19		570C-22		570C-72
	570D-19		570D-22		570D-72
	570E-19		570E-22		570E-72
	570F-19		570F-22		570F-72

PART NO.	FIG.NO.-REF.NO.	PART NO.	FIG.NO.-REF.NO.	PART NO.	FIG.NO.-REF.NO.
63258-88L00	444A-60	63272-87J00	444A-27	63612-87J00	444A-44
	444B-60		444B-27		444B-44
	444C-60		444C-27		444C-44
	444D-60		444D-27		444D-44
	570A-75		570A-26		570A-43
	570B-75		570B-26		570B-43
	570C-75		570C-26		570C-43
	570D-75		570D-26		570D-43
	570E-75		570E-26		570E-43
	570F-75		570F-26		570F-43
63260-88L00	444A-26	63273-87J00	444A-28	63612-88L10	444A-55
	444B-26		444B-28		444B-55
	444C-26		444C-28		444C-55
	444D-26		444D-28		444D-55
	570A-25		570A-27		570A-54
	570B-25		570B-27		570B-54
	570C-25		570C-27		570C-54
	570D-25		570D-27		570D-54
	570E-25		570E-27		570E-54
	570F-25		570F-27		570F-54
63261-87J00	444A-32	63274-87J00	444A-33	63626-88L00	444A-36
	444B-32		444B-33		444B-36
	444C-32		444C-33		444C-36
	444D-32		444D-33		444D-36
	570A-31		570A-32		570A-35
	570B-31		570B-32		570B-35
	570C-31		570C-32		570C-35
	570D-31		570D-32		570D-35
	570E-31		570E-32		570E-35
	570F-31		570F-32		570F-35
63262-87J00	444A-29	63610-87J00	444A-34	65000-95D01	432A-1
	444B-29		444B-34	65520-95D01	432A-2
	444C-29		444C-34	65561-95D00	432A-3
	444D-29		444D-34	65700-90J14	432A-11
	570A-28		570A-33	65740-95D01	432A-7
	570B-28		570B-33	65750-95500	432A-12
	570C-28		570C-33	65770-90J11	432A-13
	570D-28		570D-33	65831-95D00	432A-4
	570E-28		570E-33	65890-95D00	432A-5
	570F-28		570F-33	65892-95D00	432A-6
63271-87J00	444A-30	63611-88L00	444A-43	67200-93J13	544A-1
	444B-30		444B-43		544B-1
	444C-30		444C-43		544C-1
	444D-30		444D-43		544D-1
	570A-29		570A-42		544E-1
	570B-29		570B-42		544F-1
	570C-29		570C-42		545A-1
	570D-29		570D-42		545B-1
	570E-29		570E-42		545C-1
	570F-29		570F-42		545D-1

PART NO.	FIG.NO.-REF.NO.
	545E-1
	545F-1
67200-93J50	508A-1
	508B-1
	508C-1
	508D-1
	508E-1
	508F-1
67211-93J00	544A-27
	544B-27
	544C-27
	544D-27
	544E-27
	544F-27
67212-95600	508A-14
	508B-14
	508C-14
	508D-14
	508E-14
	508F-14
67220-95630	508A-16
	508B-16
	508C-16
	508D-16
	508E-16
	508F-16
67221-92E00	545A-8
	545B-8
	545C-8
	545D-8
	545E-8
	545F-8
67222-92E00	545A-2
	545B-2
	545C-2
	545D-2
	545E-2
	545F-2
67223-92E00	545A-3
	545B-3
	545C-3
	545D-3
	545E-3
	545F-3
67223-99E10	508A-17
	508B-17
	508C-17
	508D-17
	508E-17
	508F-17

PART NO.	FIG.NO.-REF.NO.
67224-92E00	545A-9
	545B-9
	545C-9
	545D-9
	545E-9
	545F-9
67226-92E00	545A-15
	545B-15
	545C-15
	545D-15
	545E-15
	545F-15
67226-92E10	545A-16
	545B-16
	545C-16
	545D-16
	545E-16
	545F-16
67227-92E00	545A-24
	545B-24
	545C-24
	545D-24
	545E-24
	545F-24
67228-92E00	545A-18
	545B-18
	545C-18
	545D-18
	545E-18
	545F-18
67229-95600	508A-18
	508B-18
	508C-18
	508D-18
	508E-18
	508F-18
67230-92E00	545A-20
	545B-20
	545C-20
	545D-20
	545E-20
	545F-20
67231-92E00	545A-41
	545B-41
	545C-41
	545D-41
	545E-41
	545F-41
67232-95600	508A-19
	508B-19

PART NO.	FIG.NO.-REF.NO.
	508C-19
	508D-19
	508E-19
	508F-19
	545A-42
	545B-42
	545C-42
	545D-42
	545E-42
	545F-42
67232-95620	545A-28
	545B-28
	545C-28
	545D-28
	545E-28
	545F-28
67233-92E00	545A-26
	545B-26
	545C-26
	545D-26
	545E-26
	545F-26
67234-92E00	545A-22
	545B-22
	545C-22
	545D-22
	545E-22
	545F-22
67235-92E00	545A-27
	545B-27
	545C-27
	545D-27
	545E-27
	545F-27
67236-92E00	545A-32
	545B-32
	545C-32
	545D-32
	545E-32
	545F-32
67237-92E01	545A-33
	545B-33
	545C-33
	545D-33
	545E-33
	545F-33
67238-87D00	508A-20
	508B-20
	508C-20
	508D-20

PART NO.	FIG.NO.-REF.NO.
	508E-20
	508F-20
67238-92E00	545A-34
	545B-34
	545C-34
	545D-34
	545E-34
	545F-34
67239-92E00	545A-35
	545B-35
	545C-35
	545D-35
	545E-35
	545F-35
67239-92E10	545A-45
	545B-45
	545C-45
	545D-45
	545E-45
	545F-45
67240-92E00	545A-17
	545B-17
	545C-17
	545D-17
	545E-17
	545F-17
67241-92E10	545A-43
	545B-43
	545C-43
	545D-43
	545E-43
	545F-43
67241-99E10	508A-21
	508B-21
	508C-21
	508D-21
	508E-21
	508F-21
67243-92E00	545A-44
	545B-44
	545C-44
	545D-44
	545E-44
	545F-44
67243-95600	508A-22
	508B-22
	508C-22
	508D-22
	508E-22
	508F-22

PART NO.	FIG.NO.-REF.NO.
67244-95600	508A-23
	508B-23
	508C-23
	508D-23
	508E-23
	508F-23
67245-92E00	545A-23
	545B-23
	545C-23
	545D-23
	545E-23
	545F-23
67245-95600	508A-24
	508B-24
	508C-24
	508D-24
	508E-24
	508F-24
67246-92E00	545A-36
	545B-36
	545C-36
	545D-36
	545E-36
	545F-36
67251-93J00	544A-12
	544B-12
	544C-12
	544D-12
	544E-12
	544F-12
67251-99E20	508A-25
	508B-25
	508C-25
	508D-25
	508E-25
	508F-25
67252-92E10	545A-39
	545B-39
	545C-39
	545D-39
	545E-39
	545F-39
67252-95600	508A-26
	508B-26
	508C-26
	508D-26
	508E-26
	508F-26
67253-92E00	544A-15
	544B-15

PART NO.	FIG.NO.-REF.NO.
	544C-15
	544D-15
	544E-15
	544F-15
67253-92E10	545A-38
	545B-38
	545C-38
	545D-38
	545E-38
	545F-38
67253-95600	508A-27
	508B-27
	508C-27
	508D-27
	508E-27
	508F-27
	545A-40
	545B-40
	545C-40
	545D-40
	545E-40
	545F-40
67255-99E10	508A-28
	508B-28
	508C-28
	508D-28
	508E-28
	508F-28
67256-95600	508A-29
	508B-29
	508C-29
	508D-29
	508E-29
	508F-29
67257-92E00	544A-11
	544B-11
	544C-11
	544D-11
	544E-11
	544F-11
67257-99E10	508A-30
	508B-30
	508C-30
	508D-30
	508E-30
	508F-30
67258-99E00	508A-31
	508B-31
	508C-31
	508D-31

PART NO.	FIG.NO.-REF.NO.
	508E-31
	508F-31
67259-87D00	508A-32
	508B-32
	508C-32
	508D-32
	508E-32
	508F-32
67261-93J00	544A-2
	544B-2
	544C-2
	544D-2
	544E-2
	544F-2
67261-99E10	508A-33
	508B-33
	508C-33
	508D-33
	508E-33
	508F-33
67263-93J00	544A-3
	544B-3
	544C-3
	544D-3
	544E-3
	544F-3
67264-95600	508A-35
	508B-35
	508C-35
	508D-35
	508E-35
	508F-35
67267-93J00	508A-36
	508B-36
	508C-36
	508D-36
	508E-36
	508F-36
67269-92E00	545A-29
	545B-29
	545C-29
	545D-29
	545E-29
	545F-29
67271-92E00	544A-26
	544B-26
	544C-26
	544D-26
	544E-26
	544F-26

PART NO.	FIG.NO.-REF.NO.
67273-92E00	544A-23
	544B-23
	544C-23
	544D-23
	544E-23
	544F-23
67273-95600	508A-37
	508B-37
	508C-37
	508D-37
	508E-37
	508F-37
	544A-22
	544B-22
	544C-22
	544D-22
	544E-22
	544F-22
67274-92E00	544A-24
	544B-24
	544C-24
	544D-24
	544E-24
	544F-24
67275-95600	508A-38
	508B-38
	508C-38
	508D-38
	508E-38
	508F-38
	544A-21
	544B-21
	544C-21
	544D-21
	544E-21
	544F-21
67281-93J00	544A-17
	544B-17
	544C-17
	544D-17
	544E-17
	544F-17
67282-94L00	508A-52
	508B-52
	508C-52
	508D-52
	508E-52
	508F-52
67284-94L00	508A-53
	508B-53

PART NO.	FIG.NO.-REF.NO.
	508C-53
	508D-53
	508E-53
	508F-53
67286-92E00	545A-19
	545B-19
	545C-19
	545D-19
	545E-19
	545F-19
67287-92E00	544A-20
	544B-20
	544C-20
	544D-20
	544E-20
	544F-20
67288-92E00	545A-4
	545B-4
	545C-4
	545D-4
	545E-4
	545F-4
67288-92E10	545A-6
	545B-6
	545C-6
	545D-6
	545E-6
	545F-6
67288-92E20	544A-7
	544B-7
	544C-7
	544D-7
	544E-7
	544F-7
67288-92E30	544A-14
	544B-14
	544C-14
	544D-14
	544E-14
	544F-14
67288-92E40	544A-10
	544B-10
	544C-10
	544D-10
	544E-10
	544F-10
67291-92E00	545A-7
	545B-7
	545C-7
	545D-7

PART NO.	FIG.NO.-REF.NO.
	545E-7
	545F-7
67291-92E10	545A-37
	545B-37
	545C-37
	545D-37
	545E-37
	545F-37
67292-87J00	444A-37
	444B-37
	444C-37
	444D-37
	570A-36
	570B-36
	570C-36
	570D-36
	570E-36
	570F-36
67292-94300	508A-39
	508B-39
	508C-39
	508D-39
	508E-39
	508F-39
	545A-5
	545B-5
	545C-5
	545D-5
	545E-5
	545F-5
67294-92E00	545A-10
	545B-10
	545C-10
	545D-10
	545E-10
	545F-10
67294-95600	508A-40
	508B-40
	508C-40
	508D-40
	508E-40
	508F-40
67295-92E00	544A-8
	544B-8
	544C-8
	544D-8
	544E-8
	544F-8
67295-92E10	544A-5
	544B-5

PART NO.	FIG.NO.-REF.NO.
	544C-5
	544D-5
	544E-5
	544F-5
67296-88D10	544A-6
	544B-6
	544C-6
	544D-6
	544E-6
	544F-6
	545A-13
	545A-30
	545B-13
	545B-30
	545C-13
	545C-30
	545D-13
	545D-30
	545E-13
	545E-30
	545F-13
	545F-30
67296-90J00	508A-41
	508B-41
	508C-41
	508D-41
	508E-41
	508F-41
67296-92E11	508A-15
	508B-15
	508C-15
	508D-15
	508E-15
	508F-15
	545A-12
	545B-12
	545C-12
	545D-12
	545E-12
	545F-12
67296-92E20	545A-14
	545B-14
	545C-14
	545D-14
	545E-14
	545F-14
67296-92E30	544A-18
	544B-18
	544C-18
	544D-18

PART NO.	FIG.NO.-REF.NO.
	544E-18
	544F-18
67296-92E60	544A-13
	544B-13
	544C-13
	544D-13
	544E-13
	544F-13
67296-92E70	544A-9
	544A-28
	544B-9
	544B-28
	544C-9
	544C-28
	544D-9
	544D-28
	544E-9
	544E-28
	544F-9
	544F-28
67296-94300	508A-42
	508B-42
	508C-42
	508D-42
	508E-42
	508F-42
67296-94310	508A-34
	508B-34
	508C-34
	508D-34
	508E-34
	508F-34
67296-95600	508A-43
	508B-43
	508C-43
	508D-43
	508E-43
	508F-43
67296-95610	508A-44
	508B-44
	508C-44
	508D-44
	508E-44
	508F-44
	544A-25
	544B-25
	544C-25
	544D-25
	544E-25
	544F-25

PART NO.	FIG.NO.-REF.NO.
67297-95600	508A-45
	508B-45
	508C-45
	508D-45
	508E-45
	508F-45
67341-87L00	410A-31
	410B-31
	410C-31
	410D-31
	410E-31
	410F-31
	410G-31
	410H-31
	410J-31
	410K-31
67345-87L00	410A-33
	410B-33
	410C-33
	410D-33
	410E-33
	410F-33
	410G-33
	410H-33
	410J-33
	410K-33
67346-87L00	410A-34
	410B-34
	410C-34
	410D-34
	410E-34
	410F-34
	410G-34
	410H-34
	410J-34
	410K-34
67350-87L00	410A-36
	410B-36
	410C-36
	410D-36
	410E-36
	410F-36
	410G-36
	410H-36
	410J-36
	410K-36
67467-89J01	442A-7
	442B-7
	442C-8
	442D-8

PART NO.	FIG.NO.-REF.NO.
	442E-7
	442F-7
	442G-7
	442H-7
	442J-8
	442K-8
67500-93J00	519A-1
	519B-1
	519C-1
	519D-1
	544A-29
	544B-29
	544C-29
	544D-29
	544E-29
	544F-29
67700-87L01	442C-1
	442D-1
	442J-1
	442K-1
67701-87L01	442A-2
	442B-2
	442C-3
	442D-3
	442E-2
	442F-2
	442G-2
	442H-2
	442J-3
	442K-3
67721-87L00	442A-3
	442B-3
	442C-4
	442D-4
	442E-3
	442F-3
	442G-3
	442H-3
	442J-4
	442K-4
67725-99E10	442A-4
	442B-4
	442C-5
	442D-5
	442E-4
	442F-4
	442G-4
	442H-4
	442J-5
	442K-5

PART NO.	FIG.NO.-REF.NO.
67726-99E00	442A-5
	442B-5
	442C-6
	442D-6
	442E-5
	442F-5
	442G-5
	442H-5
	442J-6
	442K-6
67728-99E00	442A-6
	442B-6
	442C-7
	442D-7
	442E-6
	442F-6
	442G-6
	442H-6
	442J-7
	442K-7
68110-87L00	420A-19
	420B-19
	420C-19
	420D-19
	420E-19
	420F-19
	420G-19
	420H-19
	420J-19
	420K-19
68111-18G20	420A-12
	420B-12
	420C-12
	420D-12
	420E-12
	420F-12
	420G-12
	420H-12
	420J-12
	420K-12
69711-93E10	136A-7
	136B-7
	136C-7
	136D-7
	136E-7
	136F-7
	136G-7
	136H-7
	136J-7
	136K-7

PART NO.	FIG.NO.-REF.NO.
70000	
77811-54GB0-0PG	508A-46
	508B-46
	508C-46
	508D-46
	508E-46
	508F-46
90000	
99011-87L30-054	420A-18-1
	420E-18-1
	420G-18-1
99011-87L30-059	420A-18-2
	420B-18
	420C-18
	420D-18
	420E-18-2
	420F-18
	420G-18-2
	420H-18
	420J-18
	420K-18
00000	
01421-08257	122A-4
01547-06167	303A-9
01547-06207	310A-9
01547-06257	111A-19
01547-06457	111A-20
01550-05107	410A-27
	410B-27
	410C-27
	410D-27
	410E-27

PART NO.	FIG.NO.-REF.NO.
	410F-27
	410G-27
	410H-27
	410J-27
	410K-27
01550-05167	410A-28
	410B-28
	410C-28
	410D-28
	410E-28
	410F-28
	410G-28
	410H-28
	410J-28
	410K-28
01550-06127	113A-12
	143A-33
	143B-33
	143C-33
	143D-33
	143E-33
	143F-33
	143G-33
	143H-33
	143J-33
	143K-33
	146A-18
	180A-20
	180B-20
	180C-20
	180D-20
	180E-20
	180F-20
	180G-20
	180H-20
	180J-20
	180K-20
	303A-11
	322A-23
	322A-31
	326A-5
	326A-13
	326B-5
	326B-13
	326C-5
	326C-13
	326D-5
	326D-13
	326E-5
	326E-13

PART NO.	FIG.NO.-REF.NO.
	326F-5
	326F-13
	326G-5
	326G-13
	326H-5
	326H-13
	326J-5
	326J-13
	326K-5
	326K-13
	420A-8
	420B-8
	420C-8
	420D-8
	420E-8
	420F-8
	420G-8
	420H-8
	420J-8
	420K-8
01550-0612A	121A-6
	121B-6
	121C-6
	121D-6
	121E-6
	121F-6
	121G-6
	121H-6
	121J-6
	121K-6
01550-06167	146A-9
	163A-4
	163B-4
	163C-4
	163D-4
	163E-4
	163F-4
	163G-4
	163H-4
	163J-4
	163K-4
	301A-22
	410A-32
	410B-32
	410C-32
	410D-32
	410E-32
	410F-32
	410G-32
	410H-32

PART NO.	FIG.NO.-REF.NO.	PART NO.	FIG.NO.-REF.NO.	PART NO.	FIG.NO.-REF.NO.
	410J-32		163B-14		144G-12
	410K-32		163C-14		144H-12
	420A-4		163D-14		144J-12
	420B-4		163E-14		144K-12
	420C-4		163F-14	01550-0825A	119A-6
	420D-4		163G-14		401A-22
	420E-4		163H-14		401B-22
	420F-4		163J-14		401C-22
	420G-4		163K-14		401D-22
	420H-4	01550-06407	204A-11		401E-22
	420J-4	01550-06507	163A-3		401F-22
	420K-4		163B-3		401G-22
01550-0616A	175A-7		163C-3		401H-22
01550-06207	111A-28		163D-3		401J-22
	401A-15		163E-3		401K-22
	401B-15		163F-3	01550-08307	122A-5
	401C-15		163G-3		163A-15
	401D-15		163H-3		163B-15
	401E-15		163J-3		163C-15
	401F-15		163K-3		163D-15
	401G-15	01550-06557	163A-5		163E-15
	401H-15		163B-5		163F-15
	401J-15		163C-5		163G-15
	401K-15		163D-5		163H-15
01550-0620A	119A-12		163E-5		163J-15
01550-06257	146A-2		163F-5		163K-15
	310A-2		163G-5		175A-13
	310A-5		163H-5	01550-08357	301A-24
01550-06307	136A-2		163J-5	01550-0835A	119A-9
	136B-2		163K-5	01550-08407	111A-12
	136C-2	01550-08207	111A-9		113A-9
	136D-2		113A-2	01550-08457	122A-6
	136E-2		140A-8	01570-06127	410A-38
	136F-2		301A-23		410B-38
	136G-2		410A-10		410C-38
	136H-2		410B-10		410D-38
	136J-2		410C-10		410E-38
	136K-2		410D-10		410F-38
	140A-3		410E-10		410G-38
	162A-7		410F-10		410H-38
	162B-7		410G-10		410J-38
	162C-7		410H-10		410K-38
	162D-7		410J-10	02112-0408A	143A-15
	162E-7		410K-10		143C-15
	162F-7	01550-08257	144A-12		143E-15
	162G-7		144B-12		143G-15
	162H-7		144C-12		143J-15
	162J-7		144D-12	02112-0612A	111A-22
	162K-7		144E-12	02112-34167	122A-9
01550-06357	163A-14		144F-12	02142-0408B	143A-24

PART NO.	FIG.NO.-REF.NO.	PART NO.	FIG.NO.-REF.NO.	PART NO.	FIG.NO.-REF.NO.
	143C-24		401E-8		220G-28
	143E-24		401E-9		220H-28
	143G-24		401F-8		220J-28
	143J-24		401F-9		220K-28
02142-06167	322A-22		401G-8	08310-00067	322A-16
02162-05207	315A-4		401G-9	08316-10087	122A-7
03112-06303	502A-25		401H-8		322A-2
	502B-25		401H-9	08321-01067	322A-17
	502C-25		401J-8	08331-41359	204A-23
	502D-25		401J-9	08332-1107A	206A-4
	502E-25		401K-8	09100-08232	508A-47
	502F-25		401K-9		508B-47
	502G-25	04211-13189	111A-13		508C-47
	502H-25	04221-04089	116A-6		508D-47
	502J-25	04221-05109	121A-7		508E-47
	502K-25		121B-7		508F-47
03121-0516A	530A-24		121C-7	09100-12090	335A-10-2
	530B-24		121D-7		335B-10-2
	530C-24		121E-7		335C-10-2
	530D-24		121F-7		335D-10-2
	530E-24		121G-7		335E-10-2
	530F-24		121H-7		335F-10-2
03522-05169	444A-62		121J-7		335G-10-2
	444B-62		121K-7		335H-10-2
	444C-62	06111-07004	220A-21		335J-10-2
	444D-62		220B-21		335K-10-2
	570A-77		220C-21	09100-12091	335A-10-1
	570B-77		220D-21		335B-10-1
	570C-77		220E-21		335C-10-1
	570D-77		220F-21		335D-10-1
	570E-77		220G-21		335E-10-1
	570F-77		220H-21		335F-10-1
03542-06209	136A-4		220J-21		335G-10-1
	136B-4		220K-21		335H-10-1
	136C-4	06111-11004	220A-22		335J-10-1
	136D-4		220B-22		335K-10-1
	136E-4		220C-22	09103-06093	315A-13
	136F-4		220D-22	09103-06211	303A-12
	136G-4		220E-22	09103-06220	175A-2
	136H-4		220F-22	09103-06266	111A-2
	136J-4		220G-22	09103-06281	111A-8
	136K-4		220H-22		140A-7
04211-11129	401A-8		220J-22		144A-6
	401A-9		220K-22		144B-6
	401B-8	08113-60087	220A-28		144C-6
	401B-9		220B-28		144D-6
	401C-8		220C-28		144E-6
	401C-9		220D-28		144F-6
	401D-8		220E-28		144G-6
	401D-9		220F-28		144H-6

PART NO.	FIG.NO.-REF.NO.	PART NO.	FIG.NO.-REF.NO.	PART NO.	FIG.NO.-REF.NO.
	144J-6	09116-05010	204A-12		143K-26
	144K-6	09116-06121	162A-8		310A-4
	405A-11		162B-8	09116-06215	134A-4
	405B-11		162C-8	09116-08122	220A-29
	405C-11		162D-8		220B-29
	405D-11		162E-8		220C-29
	405E-11		162F-8		220D-29
	405F-11		162G-8		220E-29
	405G-11		162H-8		220F-29
	405H-11		162J-8		220G-29
	405J-11		162K-8		220H-29
	405K-11		180A-7		220J-29
	407A-9		180B-7		220K-29
	407B-9		180C-7	09116-08128	180A-10
	407C-9		180D-7		180B-10
	407D-9		180E-7		180C-10
	407E-9		180F-7		180D-10
	407F-9		180G-7		180E-10
	407G-9		180H-7		180F-10
	407H-9		180J-7		180G-10
	407J-9		180K-7		180H-10
	407K-9		335A-9		180J-10
09103-16004	303A-2		335B-9		180K-10
09106-05030	303A-7		335C-9		401A-5
09108-10115	405A-5		335D-9		401B-5
	405B-5		335E-9		401C-5
	405C-5		335F-9		401D-5
	405D-5		335G-9		401E-5
	405E-5		335H-9		401F-5
	405F-5		335J-9		401G-5
	405G-5		335K-9		401H-5
	405H-5	09116-06127	410A-19		401J-5
	405J-5		410B-19		401K-5
	405K-5		410C-19	09116-08137	335A-6
09108-10156	336A-18		410D-19		335B-6
	336B-18		410E-19		335C-6
	336E-18		410F-19		335D-6
	336F-18		410G-19		335E-6
	336G-18		410H-19		335F-6
	336H-18		410J-19		335G-6
09108-10157	405A-6		410K-19		335H-6
	405B-6	09116-06202	143A-26		335J-6
	405C-6		143B-26		335K-6
	405D-6		143C-26		401A-33
	405E-6		143D-26		401B-33
	405F-6		143E-26		401C-33
	405G-6		143F-26		401D-33
	405H-6		143G-26		401E-33
	405J-6		143H-26		401F-33
	405K-6		143J-26		401G-33

PART NO.	FIG.NO.-REF.NO.	PART NO.	FIG.NO.-REF.NO.	PART NO.	FIG.NO.-REF.NO.
	401H-33		180H-15		180H-16
	401J-33		180J-15		180J-16
	401K-33		180K-15		180K-16
	407A-5	09116-10137	407A-16		401A-30
	407B-5		407B-16		401B-30
	407C-5		407C-16		401C-30
	407D-5		407D-16		401D-30
	407E-5		407E-16		401E-30
	407F-5		407F-16		401F-30
	407G-5		407G-16		401G-30
	407H-5		407H-16		401H-30
	407J-5		407J-16		401J-30
	407K-5		407K-16		401K-30
	444A-65	09116-10147	401A-31		405A-2
	444B-65		401B-31		405A-21
	444C-65		401C-31		405B-2
	444D-65		401D-31		405B-21
	570A-62		401E-31		405C-2
	570B-62		401F-31		405C-21
	570C-62		401G-31		405D-2
	570D-62		401H-31		405D-21
	570E-62		401J-31		405E-2
	570F-62		401K-31		405E-21
09116-08159	401A-6	09116-10150	407A-17		405F-2
	401B-6		407B-17		405F-21
	401C-6		407C-17		405G-2
	401D-6		407D-17		405G-21
	401E-6		407E-17		405H-2
	401F-6		407F-17		405H-21
	401G-6		407G-17		405J-2
	401H-6		407H-17		405J-21
	401J-6		407J-17		405K-2
	401K-6		407K-17		405K-21
09116-08163	410A-12		444A-74	09116-10179	337A-26
	410B-12		444B-74	09117-08110	220A-33
	410C-12		444C-74		220B-33
	410D-12		444D-74		220C-33
	410E-12		570A-69		220D-33
	410F-12		570B-69		220E-33
	410G-12		570C-69		220F-33
	410H-12		570D-69		220G-33
	410J-12		570E-69		220H-33
	410K-12		570F-69		220J-33
09116-10129	180A-15	09116-10176	180A-16		220K-33
	180B-15		180B-16	09125-05042	545A-21
	180C-15		180C-16		545B-21
	180D-15		180D-16		545C-21
	180E-15		180E-16		545D-21
	180F-15		180F-16		545E-21
	180G-15		180G-16		545F-21

PART NO.	FIG.NO.-REF.NO.	PART NO.	FIG.NO.-REF.NO.	PART NO.	FIG.NO.-REF.NO.
09125-05046	315A-7		336H-9		160K-15
09125-05047	444A-42		336H-10	09136-06148	410A-5
	444B-42		336H-11		410B-5
	444C-42		336H-26		410C-5
	444D-42		336J-9		410D-5
	570A-41		336J-10		410E-5
	570B-41		336J-11		410F-5
	570C-41		336J-22		410G-5
	570D-41		336K-9		410H-5
	570E-41		336K-10		410J-5
	570F-41		336K-11		410K-5
09125-05050	337A-28		336K-22	09136-06149	410A-6
09125-05135	519A-2		337A-24		410B-6
	519B-2	09126-05003	508A-48		410C-6
	519C-2		508B-48		410D-6
	519D-2		508C-48		410E-6
	544A-30		508D-48		410F-6
	544B-30		508E-48		410G-6
	544C-30		508F-48		410H-6
	544D-30	09126-06006	545A-25		410J-6
	544E-30		545B-25		410K-6
	544F-30		545C-25	09136-06161	410A-7
09125-06063	336A-9		545D-25		410B-7
	336A-10		545E-25		410C-7
	336A-11		545F-25		410D-7
	336A-26	09126-06015	444A-38		410E-7
	336B-9		444B-38		410F-7
	336B-10		444C-38		410G-7
	336B-11		444D-38		410H-7
	336B-26		570A-37		410J-7
	336C-9		570B-37		410K-7
	336C-10		570C-37	09137-04004	326A-2
	336C-11		570D-37		326B-2
	336C-22		570E-37		326C-2
	336D-9		570F-37		326D-2
	336D-10	09131-05004	502A-33		326E-2
	336D-11		502B-33		326F-2
	336D-22		502E-33		326G-2
	336E-9		502F-33		326H-2
	336E-10		502G-33		326J-2
	336E-11		502H-33		326K-2
	336E-26	09132-04034	160A-15	09140-05005	163A-11
	336F-9		160B-15		163B-11
	336F-10		160C-15		163C-11
	336F-11		160D-15		163D-11
	336F-26		160E-15		163E-11
	336G-9		160F-15		163F-11
	336G-10		160G-15		163G-11
	336G-11		160H-15		163H-11
	336G-26		160J-15		163J-11

PART NO.	FIG.NO.-REF.NO.	PART NO.	FIG.NO.-REF.NO.	PART NO.	FIG.NO.-REF.NO.
	163K-11		407H-26		335B-7
	519A-3		407J-26		335C-7
	519B-3		407K-26		335D-7
	519C-3	09159-10050	336A-19		335E-7
	519D-3		336B-19		335F-7
	544A-32		336E-19		335G-7
	544B-32		336F-19		335H-7
	544C-32		336G-19		335J-7
	544D-32		336H-19		335K-7
	544E-32	09159-12014	335A-11	09160-05024	544A-19
	544F-32		335B-11		544B-19
09140-06020	508A-49		335C-11		544C-19
	508B-49		335D-11		544D-19
	508C-49		335E-11		544E-19
	508D-49		335F-11		544F-19
	508E-49		335G-11	09160-05029	519A-4
	508F-49		335H-11		519B-4
	545A-31		335J-11		519C-4
	545B-31		335K-11		519D-4
	545C-31		401A-27		544A-31
	545D-31		401B-27		544B-31
	545E-31		401C-27		544C-31
	545F-31		401D-27		544D-31
09140-10032	336A-27		401E-27		544E-31
	336B-27		401F-27		544F-31
	336C-23		401G-27	09160-06046	163A-12
	336D-23		401H-27		163B-12
	336E-27		401J-27		163C-12
	336F-27		401K-27		163D-12
	336G-27		405A-15		163E-12
	336H-27		405B-15		163F-12
	336J-23		405C-15		163G-12
	336K-23		405D-15		163H-12
09140-14024	220A-10		405E-15		163J-12
	220B-10		405F-15		163K-12
	220C-10		405G-15	09160-06055	442A-9
	220D-10		405H-15		442B-9
	220E-10		405J-15		442C-10
	220F-10		405K-15		442D-10
	220G-10		444A-66		442E-9
	220H-10		444B-66		442F-9
	220J-10		444C-66		442G-9
	220K-10		444D-66		442H-9
09141-18005	407A-26		570A-63		442J-10
	407B-26		570B-63		442K-10
	407C-26		570C-63	09160-06082	336A-28
	407D-26		570D-63		336B-28
	407E-26		570E-63		336C-24
	407F-26		570F-63		336D-24
	407G-26	09159-22006	335A-7		336E-28

PART NO.	FIG.NO.-REF.NO.	PART NO.	FIG.NO.-REF.NO.	PART NO.	FIG.NO.-REF.NO.
	336F-28		444B-67	09160-18028	407A-28
	336G-28		444C-67		407B-28
	336H-28		444D-67		407C-28
	336J-24		570A-64		407D-28
	336K-24		570B-64		407E-28
09160-06084	163A-6		570C-64		407F-28
	163B-6		570D-64		407G-28
	163C-6		570E-64		407H-28
	163D-6		570F-64		407J-28
	163E-6	09160-12110	335A-12		407K-28
	163F-6		335B-12	09160-18031	401A-10
	163G-6		335C-12		401B-10
	163H-6		335D-12		401C-10
	163J-6		335E-12		401D-10
	163K-6		335F-12		401E-10
09160-06104	508A-50		335G-12		401F-10
	508B-50		335H-12		401G-10
	508C-50		335J-12		401H-10
	508D-50		335K-12		401J-10
	508E-50		401A-28		401K-10
	508F-50		401B-28	09160-39001	336A-12
09160-09019	204A-8		401C-28		336B-12
	204A-14		401D-28		336C-12
09160-10141	336A-20		401E-28		336D-12
	336B-20		401F-28		336E-12
	336E-20		401G-28		336F-12
	336F-20		401H-28		336G-12
	336G-20		401J-28		336H-12
	336H-20		401K-28		336J-12
	407A-19	09160-12124	444A-68		336K-12
	407B-19		444B-68	09161-16008	160A-12
	407C-19		444C-68		160B-12
	407D-19		444D-68		160C-12
	407E-19		570A-65		160D-12
	407F-19		570B-65		160E-12
	407G-19		570C-65		160F-12
	407H-19		570D-65		160G-12
	407J-19		570E-65		160H-12
	407K-19		570F-65		160J-12
09160-12044	335A-13	09160-13014	410A-23		160K-12
	335B-13		410B-23	09163-06001	444A-39
	335C-13		410C-23		444B-39
	335D-13		410D-23		444C-39
	335E-13		410E-23		444D-39
	335F-13		410F-23		570A-38
	335G-13		410G-23		570B-38
	335H-13		410H-23		570C-38
	335J-13		410J-23		570D-38
	335K-13		410K-23		570E-38
09160-12066	444A-67	09160-16047	303A-3		570F-38

PART NO.	FIG.NO.-REF.NO.	PART NO.	FIG.NO.-REF.NO.	PART NO.	FIG.NO.-REF.NO.
09164-13010	444A-70		143F-27		220F-11-6
	444B-70		143G-27		220G-11-6
	444C-70		143H-27		220H-11-6
	444D-70		143J-27		220J-11-6
	570A-67		143K-27		220K-11-6
	570B-67	09169-08039	410A-13	09181-25073	220A-11-7
	570C-67		410B-13		220B-11-7
	570D-67		410C-13		220C-11-7
	570E-67		410D-13		220D-11-7
	570F-67		410E-13		220E-11-7
09164-14008	410A-24		410F-13		220F-11-7
	410B-24		410G-13		220G-11-7
	410C-24		410H-13		220H-11-7
	410D-24		410J-13		220J-11-7
	410E-24		410K-13		220K-11-7
	410F-24	09169-28003	336A-13	09181-25074	220A-11-8
	410G-24		336B-13		220B-11-8
	410H-24		336C-13		220C-11-8
	410J-24		336D-13		220D-11-8
	410K-24		336E-13		220E-11-8
09168-10034	407A-7		336F-13		220F-11-8
	407B-7		336G-13		220G-11-8
	407C-7		336H-13		220H-11-8
	407D-7		336J-13		220J-11-8
	407E-7		336K-13		220K-11-8
	407F-7	09180-06186	163A-13	09181-25075	220A-11-9
	407G-7		163B-13		220B-11-9
	407H-7		163C-13		220C-11-9
	407J-7		163D-13		220D-11-9
	407K-7		163E-13		220E-11-9
09168-12012	180A-13		163F-13		220F-11-9
	180B-13		163G-13		220G-11-9
	180C-13		163H-13		220H-11-9
	180D-13		163J-13		220J-11-9
	180E-13		163K-13		220K-11-9
	180F-13	09181-25030	220A-23	09181-25130	220A-11-1
	180G-13		220B-23		220B-11-1
	180H-13		220C-23		220C-11-1
	180J-13		220D-23		220D-11-1
	180K-13		220E-23		220E-11-1
09168-16002	175A-4		220F-23		220F-11-1
09169-06053	322A-20		220G-23		220G-11-1
09169-06062	111A-29		220H-23		220H-11-1
	310A-6		220J-23		220J-11-1
09169-06075	134A-5		220K-23		220K-11-1
09169-06090	143A-27	09181-25072	220A-11-6	09181-25139	220A-11-2
	143B-27		220B-11-6		220B-11-2
	143C-27		220C-11-6		220C-11-2
	143D-27		220D-11-6		220D-11-2
	143E-27		220E-11-6		220E-11-2

PART NO.	FIG.NO.-REF.NO.	PART NO.	FIG.NO.-REF.NO.	PART NO.	FIG.NO.-REF.NO.
	220F-11-2		220F-12-2		220F-12-7
	220G-11-2		220G-12-2		220G-12-7
	220H-11-2		220H-12-2		220H-12-7
	220J-11-2		220J-12-2		220J-12-7
	220K-11-2		220K-12-2		220K-12-7
09181-25143	220A-11-3	09181-40005	220A-12-3	09181-40010	220A-12-8
	220B-11-3		220B-12-3		220B-12-8
	220C-11-3		220C-12-3		220C-12-8
	220D-11-3		220D-12-3		220D-12-8
	220E-11-3		220E-12-3		220E-12-8
	220F-11-3		220F-12-3		220F-12-8
	220G-11-3		220G-12-3		220G-12-8
	220H-11-3		220H-12-3		220H-12-8
	220J-11-3		220J-12-3		220J-12-8
	220K-11-3		220K-12-3		220K-12-8
09181-25149	220A-11-4	09181-40006	220A-12-4	09181-40011	220A-12-9
	220B-11-4		220B-12-4		220B-12-9
	220C-11-4		220C-12-4		220C-12-9
	220D-11-4		220D-12-4		220D-12-9
	220E-11-4		220E-12-4		220E-12-9
	220F-11-4		220F-12-4		220F-12-9
	220G-11-4		220G-12-4		220G-12-9
	220H-11-4		220H-12-4		220H-12-9
	220J-11-4		220J-12-4		220J-12-9
	220K-11-4		220K-12-4		220K-12-9
09181-25153	220A-11-5	09181-40007	220A-12-5	09181-40012	220A-12-10
	220B-11-5		220B-12-5		220B-12-10
	220C-11-5		220C-12-5		220C-12-10
	220D-11-5		220D-12-5		220D-12-10
	220E-11-5		220E-12-5		220E-12-10
	220F-11-5		220F-12-5		220F-12-10
	220G-11-5		220G-12-5		220G-12-10
	220H-11-5		220H-12-5		220H-12-10
	220J-11-5		220J-12-5		220J-12-10
	220K-11-5		220K-12-5		220K-12-10
09181-39001	336A-14	09181-40008	220A-12-6	09181-40013	220A-12-11
	336B-14		220B-12-6		220B-12-11
	336C-14		220C-12-6		220C-12-11
	336D-14		220D-12-6		220D-12-11
	336E-14		220E-12-6		220E-12-11
	336F-14		220F-12-6		220F-12-11
	336G-14		220G-12-6		220G-12-11
	336H-14		220H-12-6		220H-12-11
	336J-14		220J-12-6		220J-12-11
	336K-14		220K-12-6		220K-12-11
09181-40004	220A-12-2	09181-40009	220A-12-7	09181-40018	220A-12-1
	220B-12-2		220B-12-7		220B-12-1
	220C-12-2		220C-12-7		220C-12-1
	220D-12-2		220D-12-7		220D-12-1
	220E-12-2		220E-12-7		220E-12-1

PART NO.	FIG.NO.-REF.NO.	PART NO.	FIG.NO.-REF.NO.	PART NO.	FIG.NO.-REF.NO.
	220F-12-1		220F-9-3		220F-9-9
	220G-12-1		220G-9-3		220G-9-9
	220H-12-1		220H-9-3		220H-9-9
	220J-12-1		220J-9-3		220J-9-9
	220K-12-1		220K-9-3		220K-9-9
09181-40186	220A-9-1	09181-41004	220A-9-4	09181-41010	220A-9-10
	220B-9-1		220B-9-4		220B-9-10
	220C-9-1		220C-9-4		220C-9-10
	220D-9-1		220D-9-4		220D-9-10
	220E-9-1		220E-9-4		220E-9-10
	220F-9-1		220F-9-4		220F-9-10
	220G-9-1		220G-9-4		220G-9-10
	220H-9-1		220H-9-4		220H-9-10
	220J-9-1		220J-9-4		220J-9-10
	220K-9-1		220K-9-4		220K-9-10
09181-40190	220A-9-7	09181-41005	220A-9-5	09181-41012	220A-9-12
	220B-9-7		220B-9-5		220B-9-12
	220C-9-7		220C-9-5		220C-9-12
	220D-9-7		220D-9-5		220D-9-12
	220E-9-7		220E-9-5		220E-9-12
	220F-9-7		220F-9-5		220F-9-12
	220G-9-7		220G-9-5		220G-9-12
	220H-9-7		220H-9-5		220H-9-12
	220J-9-7		220J-9-5		220J-9-12
	220K-9-7		220K-9-5		220K-9-12
09181-40195	220A-9-11	09181-41006	220A-9-6	09181-41013	220A-9-13
	220B-9-11		220B-9-6		220B-9-13
	220C-9-11		220C-9-6		220C-9-13
	220D-9-11		220D-9-6		220D-9-13
	220E-9-11		220E-9-6		220E-9-13
	220F-9-11		220F-9-6		220F-9-13
	220G-9-11		220G-9-6		220G-9-13
	220H-9-11		220H-9-6		220H-9-13
	220J-9-11		220J-9-6		220J-9-13
	220K-9-11		220K-9-6		220K-9-13
09181-41002	220A-9-2	09181-41008	220A-9-8	09181-41014	220A-9-14
	220B-9-2		220B-9-8		220B-9-14
	220C-9-2		220C-9-8		220C-9-14
	220D-9-2		220D-9-8		220D-9-14
	220E-9-2		220E-9-8		220E-9-14
	220F-9-2		220F-9-8		220F-9-14
	220G-9-2		220G-9-8		220G-9-14
	220H-9-2		220H-9-8		220H-9-14
	220J-9-2		220J-9-8		220J-9-14
	220K-9-2		220K-9-8		220K-9-14
09181-41003	220A-9-3	09181-41009	220A-9-9	09181-64002	220A-14-1
	220B-9-3		220B-9-9		220B-14-1
	220C-9-3		220C-9-9		220C-14-1
	220D-9-3		220D-9-9		220D-14-1
	220E-9-3		220E-9-9		220E-14-1

PART NO.	FIG.NO.-REF.NO.	PART NO.	FIG.NO.-REF.NO.	PART NO.	FIG.NO.-REF.NO.
	220F-14-1		220F-14-6		410F-25
	220G-14-1		220G-14-6		410G-25
	220H-14-1		220H-14-6		410H-25
	220J-14-1		220J-14-6		410J-25
	220K-14-1		220K-14-6		410K-25
09181-64003	220A-14-2	09181-64008	220A-14-7	09202-06031	160A-13
	220B-14-2		220B-14-7		160B-13
	220C-14-2		220C-14-7		160C-13
	220D-14-2		220D-14-7		160D-13
	220E-14-2		220E-14-7		160E-13
	220F-14-2		220F-14-7		160F-13
	220G-14-2		220G-14-7		160G-13
	220H-14-2		220H-14-7		160H-13
	220J-14-2		220J-14-7		160J-13
	220K-14-2		220K-14-7		160K-13
09181-64004	220A-14-3	09181-64009	220A-14-8	09202-07003	220A-18
	220B-14-3		220B-14-8		220B-18
	220C-14-3		220C-14-8		220C-18
	220D-14-3		220D-14-8		220D-18
	220E-14-3		220E-14-8		220E-18
	220F-14-3		220F-14-8		220F-18
	220G-14-3		220G-14-8		220G-18
	220H-14-3		220H-14-8		220H-18
	220J-14-3		220J-14-8		220J-18
	220K-14-3		220K-14-8		220K-18
09181-64005	220A-14-4	09181-64010	220A-14-9	09202-08006	401A-7
	220B-14-4		220B-14-9		401B-7
	220C-14-4		220C-14-9		401C-7
	220D-14-4		220D-14-9		401D-7
	220E-14-4		220E-14-9		401E-7
	220F-14-4		220F-14-9		401F-7
	220G-14-4		220G-14-9		401G-7
	220H-14-4		220H-14-9		401H-7
	220J-14-4		220J-14-9		401J-7
	220K-14-4		220K-14-9		401K-7
09181-64006	220A-14-5	09181-64011	220A-14-10		405A-3
	220B-14-5		220B-14-10		405A-7
	220C-14-5		220C-14-10		405B-3
	220D-14-5		220D-14-10		405B-7
	220E-14-5		220E-14-10		405C-3
	220F-14-5		220F-14-10		405C-7
	220G-14-5		220G-14-10		405D-3
	220H-14-5		220H-14-10		405D-7
	220J-14-5		220J-14-10		405E-3
	220K-14-5		220K-14-10		405E-7
09181-64007	220A-14-6	09202-04022	410A-25		405F-3
	220B-14-6		410B-25		405F-7
	220C-14-6		410C-25		405G-3
	220D-14-6		410D-25		405G-7
	220E-14-6		410E-25		405H-3

PART NO.	FIG.NO.-REF.NO.	PART NO.	FIG.NO.-REF.NO.	PART NO.	FIG.NO.-REF.NO.
	405H-7	09246-05006	175A-14		401F-16
	405J-3	09248-10008	407A-6		401G-16
	405J-7		407B-6		401H-16
	405K-3		407C-6		401J-16
	405K-7		407D-6		401K-16
	407A-3		407E-6	09262-32008	119A-2
	407B-3		407F-6	09262-35070	119A-3
	407C-3		407G-6	09263-25067	220A-6
	407D-3		407H-6		220A-25
	407E-3		407J-6		220B-6
	407F-3		407K-6		220B-25
	407G-3	09248-12009	180A-14		220C-6
	407H-3		180B-14		220C-25
	407J-3		180C-14		220D-6
	407K-3		180D-14		220D-25
09204-01006	204A-9		180E-14		220E-6
	204A-15		180F-14		220E-25
	336A-29		180G-14		220F-6
	336B-29		180H-14		220F-25
	336C-25		180J-14		220G-6
	336D-25		180K-14		220G-25
	336E-29	09248-12011	204A-16		220H-6
	336F-29	09248-18010	401A-11		220H-25
	336G-29		401B-11		220J-6
	336H-29		401C-11		220J-25
	336J-25		401D-11		220K-6
	336K-25		401E-11		220K-25
09204-03003	407A-27		401F-11	09263-26023	407A-2
	407B-27		401G-11		407B-2
	407C-27		401H-11		407C-2
	407D-27		401J-11		407D-2
	407E-27		401K-11		407E-2
	407F-27	09248-18011	113A-6		407F-2
	407G-27	09251-07003	432A-9		407G-2
	407H-27	09260-10005	204A-20		407H-2
	407J-27	09260-10006	444A-56		407J-2
	407K-27		444B-56		407K-2
09205-05011	220A-3		444C-56	09265-25046	220A-4
	220B-3		444D-56		220B-4
	220C-3		570A-55		220C-4
	220D-3		570B-55		220D-4
	220E-3		570C-55		220E-4
	220F-3		570D-55		220F-4
	220G-3		570E-55		220G-4
	220H-3		570F-55		220H-4
	220J-3	09262-17019	401A-16		220J-4
	220K-3		401B-16		220K-4
09205-10008	204A-19		401C-16	09265-40003	220A-7
09206-08001	111A-3		401D-16		220B-7
09206-13019	113A-8		401E-16		220C-7

PART NO.	FIG.NO.-REF.NO.
	220D-7
	220E-7
	220F-7
	220G-7
	220H-7
	220J-7
	220K-7
09280-08012	144A-7
	144B-7
	144C-7
	144D-7
	144E-7
	144F-7
	144G-7
	144H-7
	144J-7
	144K-7
09280-09008	180A-19
	180B-19
	180C-19
	180D-19
	180E-19
	180F-19
	180G-19
	180H-19
	180J-19
	180K-19
09280-11001	401A-13
	401B-13
	401C-13
	401D-13
	401E-13
	401F-13
	401G-13
	401H-13
	401J-13
	401K-13
09280-17002	175A-6
09280-20002	401A-14
	401B-14
	401C-14
	401D-14
	401E-14
	401F-14
	401G-14
	401H-14
	401J-14
	401K-14
09280-22019	111A-6
	140A-5

PART NO.	FIG.NO.-REF.NO.
09280-26005	146A-3
09280-26006	111A-16
	162A-9
	162B-9
	162C-9
	162D-9
	162E-9
	162F-9
	162G-9
	162H-9
	162J-9
	162K-9
09280-46004	220A-31
	220B-31
	220C-31
	220D-31
	220E-31
	220F-31
	220G-31
	220H-31
	220J-31
	220K-31
09280-55006	206A-8
09280-92004	220A-26
	220B-26
	220C-26
	220D-26
	220E-26
	220F-26
	220G-26
	220H-26
	220J-26
	220K-26
09282-08005	206A-9
09282-22007	220A-32
	220B-32
	220C-32
	220D-32
	220E-32
	220F-32
	220G-32
	220H-32
	220J-32
	220K-32
	401A-18
	401B-18
	401C-18
	401D-18
	401E-18
	401F-18

PART NO.	FIG.NO.-REF.NO.
	401G-18
	401H-18
	401J-18
	401K-18
09282-25001	220A-27
	220B-27
	220C-27
	220D-27
	220E-27
	220F-27
	220G-27
	220H-27
	220J-27
	220K-27
09282-39001	336A-15
	336B-15
	336C-15
	336D-15
	336E-15
	336F-15
	336G-15
	336H-15
	336J-15
	336K-15
09283-52004	116A-12
09289-05012	121A-16
	121B-16
	121C-16
	121D-16
	121E-16
	121F-16
	121G-16
	121H-16
	121J-16
	121K-16
09289-18001	401A-17
	401B-17
	401C-17
	401D-17
	401E-17
	401F-17
	401G-17
	401H-17
	401J-17
	401K-17
09306-13007	410A-26
	410B-26
	410C-26
	410D-26
	410E-26

PART NO.	FIG.NO.-REF.NO.
	410F-26
	410G-26
	410H-26
	410J-26
	410K-26
09307-09002	204A-10
	204A-17
09320-04009	322A-21
09320-08021	322A-5
09320-08062	144A-9
	144B-9
	144C-9
	144D-9
	144E-9
	144F-9
	144G-9
	144H-9
	144J-9
	144K-9
09320-09016	111A-30
	136A-3
	136B-3
	136C-3
	136D-3
	136E-3
	136F-3
	136G-3
	136H-3
	136J-3
	136K-3
	310A-7
09320-09039	134A-6
09320-09053	143A-28
	143B-28
	143C-28
	143D-28
	143E-28
	143F-28
	143G-28
	143H-28
	143J-28
	143K-28
09320-11013	410A-14
	410B-14
	410C-14
	410D-14
	410E-14
	410F-14
	410G-14
	410H-14

PART NO.	FIG.NO.-REF.NO.
	410J-14
	410K-14
09321-08022	410A-8
	410B-8
	410C-8
	410D-8
	410E-8
	410F-8
	410G-8
	410H-8
	410J-8
	410K-8
09329-10022	420A-7
	420B-7
	420C-7
	420D-7
	420E-7
	420F-7
	420G-7
	420H-7
	420J-7
	420K-7
09343-70503-600	146A-12
09352-50823-600	143A-29
	143B-29
	143C-29
	143D-29
	143E-29
	143F-29
	143G-29
	143H-29
	143J-29
	143K-29
09352-50903-600	162A-13
	162A-14
	162B-13
	162B-14
	162C-13
	162C-14
	162D-13
	162D-14
	162E-13
	162E-14
	162F-13
	162F-14
	162G-13
	162G-14
	162H-13
	162H-14
	162J-13

PART NO.	FIG.NO.-REF.NO.
	162J-14
	162K-13
	162K-14
	507A-2
	507A-3
09352-70103-600	410A-37
	410B-37
	410C-37
	410D-37
	410E-37
	410F-37
	410G-37
	410H-37
	410J-37
	410K-37
09355-11165-600	111A-23
09355-40805-00B	407A-13
	407B-13
	407C-13
	407D-13
	407E-13
	407F-13
	407G-13
	407H-13
	407J-13
	407K-13
	502A-27
	502B-27
	502C-27
	502D-27
	502E-27
	502F-27
	502G-27
	502H-27
	502J-27
	502K-27
09362-09008	407A-14
	407B-14
	407C-14
	407D-14
	407E-14
	407F-14
	407G-14
	407H-14
	407J-14
	407K-14
09367-06006	507A-4
09367-08001	432A-10
09380-22015	337A-22
09380-38003	336A-16

PART NO.	FIG.NO.-REF.NO.	PART NO.	FIG.NO.-REF.NO.	PART NO.	FIG.NO.-REF.NO.
	336B-16		507A-5		326A-9
	336C-16	09401-11423	146A-6		326B-9
	336D-16		146A-15		326C-9
	336E-16		432A-8		326D-9
	336F-16	09401-11425	144A-10		326E-9
	336G-16		144B-10		326F-9
	336H-16		144C-10		326G-9
	336J-16		144D-10		326H-9
	336K-16		144E-10		326J-9
09381-18002	116A-4		144F-10		326K-9
09381-40005	405A-8		144G-10	09403-12320	143A-32
	405B-8		144H-10		143B-32
	405C-8		144J-10		143C-32
	405D-8		144K-10		143D-32
	405E-8	09401-15414	111A-25		143E-32
	405F-8		113A-10		143F-32
	405G-8		162A-12		143G-32
	405H-8		162B-12		143H-32
	405J-8		162C-12		143J-32
	405K-8		162D-12		143K-32
09385-06012	442A-8		162E-12	09403-12409	322A-33
	442B-8		162F-12	09403-13408	303A-10
	442C-9		162G-12	09403-19409	315A-16
	442D-9		162H-12	09403-20301	303A-13
	442E-8		162J-12	09407-08401	530A-8
	442F-8		162K-12		530A-26
	442G-8	09401-26408	162A-10		530B-8
	442H-8		162B-10		530B-26
	442J-9		162C-10		530C-8
	442K-9		162D-10		530C-26
09401-08412	143A-30		162E-10		530D-8
	143B-30		162F-10		530D-26
	143C-30		162G-10		530E-8
	143D-30		162H-10		530E-26
	143E-30		162J-10		530F-8
	143F-30		162K-10		530F-26
	143G-30	09403-07308	322A-28	09407-10404	326A-10
	143H-30	09403-07338	315A-15		326B-10
	143J-30	09403-11320	146A-17		326C-10
	143K-30		410A-39		326D-10
09401-08413	162A-15		410B-39		326E-10
	162B-15		410C-39		326F-10
	162C-15		410D-39		326G-10
	162D-15		410E-39		326H-10
	162E-15		410F-39		326J-10
	162F-15		410G-39		326K-10
	162G-15		410H-39		407A-15
	162H-15		410J-39		407B-15
	162J-15		410K-39		407C-15
	162K-15	09403-11321	322A-32		407D-15

PART NO.	FIG.NO.-REF.NO.	PART NO.	FIG.NO.-REF.NO.	PART NO.	FIG.NO.-REF.NO.
	407E-15		410C-30		570C-76
	407F-15		410D-30		570D-76
	407G-15		410E-30		570E-76
	407H-15		410F-30		570F-76
	407J-15		410G-30	09440-07071	204A-21
	407K-15		410H-30	09440-09043	220A-19
	502A-28		410J-30		220B-19
	502B-28		410K-30		220C-19
	502C-28		507A-7		220D-19
	502D-28	09408-00020	322A-35		220E-19
	502E-28	09408-00021	322A-18		220F-19
	502F-28	09408-00024	322A-30		220G-19
	502G-28	09408-00155	111A-26		220H-19
	502H-28	09408-00233	144A-11		220J-19
	502J-28		144B-11		220K-19
	502K-28		144C-11	09440-12027	444A-40
09407-11401	162A-16		144D-11		444B-40
	162B-16		144E-11		444C-40
	162C-16		144F-11		444D-40
	162D-16		144G-11		570A-39
	162E-16		144H-11		570B-39
	162F-16		144J-11		570C-39
	162G-16		144K-11		570D-39
	162H-16	09409-10304-5ES	410A-35		570E-39
	162J-16		410B-35		570F-39
	162K-16		410C-35	09440-19028	336A-30
09407-14407	315A-19		410D-35		336B-30
	322A-29		410E-35		336C-26
	502A-6		410F-35		336D-26
	502A-18		410G-35		336E-30
	502B-6		410H-35		336F-30
	502B-18		410J-35		336G-30
	502C-6		410K-35		336H-30
	502C-18	09420-04008	303A-4		336J-26
	502D-6	09420-04009	160A-14		336K-26
	502D-18		160B-14	09440-42002	220A-20
	502E-6		160C-14		220B-20
	502E-18		160D-14		220C-20
	502F-6		160E-14		220D-20
	502F-18		160F-14		220E-20
	502G-6		160G-14		220F-20
	502G-18		160H-14		220G-20
	502H-6		160J-14		220H-20
	502H-18		160K-14		220J-20
	502J-6	09440-06037	444A-61		220K-20
	502J-18		444B-61	09443-10043	336A-31
	502K-6		444C-61		336B-31
	502K-18		444D-61		336C-27
09407-25402	410A-30		570A-76		336D-27
	410B-30		570B-76		336E-31

PART NO.	FIG.NO.-REF.NO.	PART NO.	FIG.NO.-REF.NO.	PART NO.	FIG.NO.-REF.NO.
	336F-31		502A-9		502B-35
	336G-31		502A-13		502C-31
	336H-31		502A-15		502C-33
	336J-27		502A-19		502D-31
	336K-27		502B-2		502D-33
09471-12028	502A-4		502B-9		502E-35
	502B-4		502B-13		502F-35
	502C-4		502B-15		502G-35
	502D-4		502B-19		502H-35
	502E-4		502C-2		502J-31
	502F-4		502C-9		502J-33
	502G-4		502C-13		502K-31
	502H-4		502C-15		502K-33
	502J-4		502C-19		503A-7
	502K-4		502D-2		503A-17
09471-12077	460A-6		502D-9	09481-10501	322A-11
	460B-6		502D-13		508A-55
	460C-6		502D-15		508B-55
	460D-6		502D-19		508C-55
	460E-6		502E-2		508D-55
	460F-6		502E-9		508E-55
	502A-21		502E-13		508F-55
	502A-30		502E-15		521C-3
	502B-21		502E-19		521D-3
	502B-30		502F-2		521J-3
	502C-21		502F-9		521K-3
	502D-21		502F-13	09481-15501	322A-37
	502E-21		502F-15	09481-30501	322A-12
	502E-30		502F-19	09481-40401	322A-13
	502F-21		502G-2	09482-00446	111A-31
	502F-30		502G-9	09800-81840	420A-16
	502G-21		502G-13		420B-16
	502G-30		502G-15		420C-16
	502H-21		502G-19		420D-16
	502H-30		502H-2		420E-16
	502J-21		502H-9		420F-16
	502K-21		502H-13		420G-16
09471-12103	460A-2		502H-15		420H-16
	460A-4		502H-19		420J-16
	460B-2		502J-2		420K-16
	460B-4		502J-9		
	460C-2		502J-13		
	460C-4		502J-15		
	460D-2		502J-19		
	460D-4		502K-2		
	460E-2		502K-9		
	460E-4		502K-13		
	460F-2		502K-15		
	460F-4		502K-19		
	502A-2	09481-05501	502A-35		

PART NO.	FIG.NO.-REF.NO.	PART NO.	FIG.NO.-REF.NO.	PART NO.	FIG.NO.-REF.NO.

SUZUKI **DF70A/80A/90A** PARTS CATALOGUE

SUZUKI MOTOR CORPORATION All rights reserved
No part of this document may be reproduced or transmitted in any form or by any means, electronic or mechanical, for any purpose, without the express written permission of Suzuki Motor Corporation.

SUZUKI MOTOR CORPORATION
Technical Readiness Group, Quality Administration Department
300 Takatsuka, Minami, Hamamatsu, Japan

Reprint Prohibited

SUZUKI MOTOR CORPORATION

PRINTED IN JAPAN

9900B-45304